ZENITH data systems

Groupe Bull

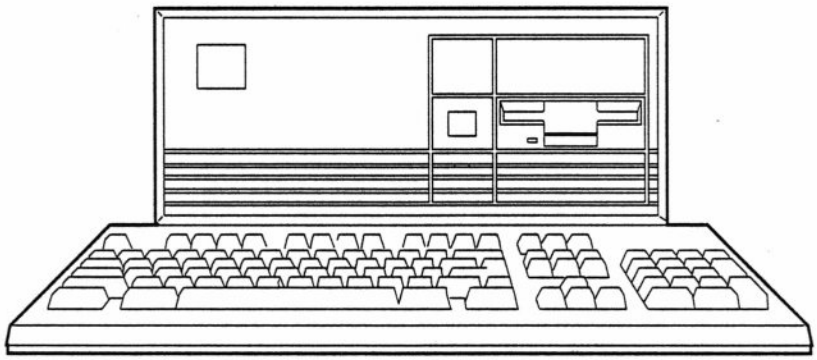

Z-486 / 25E
EISA Computer

Service Manual

860-243 585-0344

Copyrights and Trademarks

Copyright © 1990 by Zenith Data Systems Corporation.

This material may be reproduced by or for the U.S. Government pursuant to the copyright license under the clause at DFARS 252.227-7013 (Oct. 1988); or, if provided under a contract or subcontract with NASA or a civilian agency of the Government, this material may be reproduced in accordance with the provisions of the contract or subcontract with Zenith Data Systems Corporation, Hilltop Road, St. Joseph, Michigan 49085. **All other rights reserved.**

Hercules is a registered trademark of Hercules Computer Technology, Inc.
MS-DOS and XENIX are registered trademarks of Microsoft Corporation.
OS/2 is a trademark of IBM.
TIGA is a trademark of Texas Instruments.

Printed in the United States of America.

Zenith Data Systems Corporation
St. Joseph, MI 49085

Contents

Chapter 1 — Introduction

Related Materials 1-3
Tools 1-3
Safety Precautions 1-3
Base Computer 1-3
Optional Hardware 1-5

Chapter 2 — Operation

Power Up 2-1
Resetting the Computer 2-2
The Monitor Program 2-2
Entering the Monitor Program 2-2
Boot Command 2-3
User Tests 2-3

Chapter 3 — Troubleshooting

Static Precautions 3-1
Troubleshooting Procedure 3-1
Power-Up 3-2
Status LEDs 3-2
Troubleshooting Charts 3-3
Disk-Based Diagnostics 3-18
Power-Up and Error Messages 3-18

Chapter 4 — Disassembly and Options

Managing Power Supply Capacity 4-1
Static Precautions 4-2
Cover Removal/ Installation 4-2
Circuit Card Removal/Installation 4-3
Backplane Card Removal/Installation 4-5
4167 Coprocessor Installation 4-6
OEM ROM Installation 4-7
System Memory Card Removal/ Installation 4-8
SIMM Installation/ Removal 4-9
Disk Drive Installation 4-11
Optional 3.5-Inch Floppy Disk Drive Installation 4-13
Optional 5.25-Inch Floppy Disk Drive Installation 4-14
Optional SCSI Tape Backup Unit Installation 4-15
Replacing the Standard 3.5-inch Hard Disk Drive 4-16
Replacing the Standard 3.5-inch Floppy Disk Drive 4-18
Mounting Disk Drives 4-20
Blank Panel Removal 4-23
Real-Time Clock IC Replacement 4-24
Real-Time Clock IC Disposal 4-25
Card Guide Removal/ Installation 4-26
Keylock Removal/ Installation 4-27
Power Switch Replacement 4-28
Hard Disk Drive Access LED Replacement 4-29
System Board Removal/ Installation 4-30
Power Supply Removal/ Installation 4-31
TIGA VGA Daughtercard Replacement 4-32

Chapter 5 — Hardware Configuration

Static Precautions 5-1
Disk Controller Card (Part Number 240-7926-10) 5-2
High Performance VGA Card (Part Number 240-7940-10) 5-2
Z-649 TIGA Video Card with VGA Daughtercard (Part Number 181-7891-10) 5-3
Keyboard 5-4

Chapter 6 — Parts List

Specifications

Chapter 1

Introduction

The Z-486/25E™ is a high performance, 25 MHz 80486-based EISA (Extended Industry Standard Architecture) PC/AT-compatible personal workstation. EISA architecture offers increased processing power while maintaining backward compatibility with traditional PC/AT hardware and software. The computer supports from 4 to 64 megabytes of memory on the system memory board using 1- or 4-megabyte SIMMs (single in-line memory modules), or up to 4 gigabytes of memory using EISA compatible cards in the EISA expansion slots. 8K of cache memory is provided on-board the 80486 microprocessor chip.

The ECU (EISA Configuration Utility) software supplied with this computer introduces a new concept in hardware configuration. The ECU allows the user to select options and set parameters using a model on the monitor screen. This allows the user to configure the system and install options primarily through software with a minimum of time and effort spent setting switches or installing jumpers (for further information on the ECU, refer to the *Z-486/25E Owner's Manual*). Other features include:

- VGA-compatible video output (or TIGA™ depending on model)
- Two serial ports
- One bi-directional parallel port
- 1.4M, 3.5-inch floppy disk drive
- 80M or 200M IDE (Integrated Drive Electronics) hard disk drive (depending on model)
- 5.25-inch floppy disk drive support
- 5.25-inch tape backup drive support

- Real-time clock with calendar
- 101-key keyboard
- Password protection
- Supports MS-DOS®, XENIX®, and OS/2™ operating systems
- Mass-storage controller with SCSI, floppy, and IDE ports
- Five EISA expansion slots
  - ISA backward compatible
  - Three of the five slots are available for adding optional expansion cards to the system
- 80486 internal numeric coprocessor
- Weitek 4167 numeric coprocessor support.

Figure 1-1. *The Z-486/25E Personal Workstation*

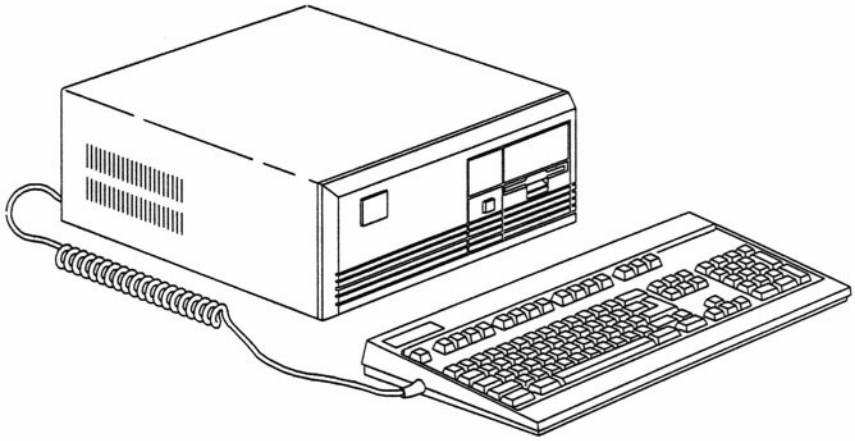

This manual includes operation, configuration, and troubleshooting procedures to the major assembly level.

Related Materials

The following materials are available:

- *Z-486/25E Owner's Manual* — Part number 595-4715
- *TM-4100 Technical Reference Manual* — Part number 595-4858
- *Disk-Based Diagnostics* — Model Number CB-31-08 (3.5-inch).

Tools

Use the following tools to install, maintain, and repair this computer:

- #1 Phillips screwdriver
- #2 Phillips screwdriver
- 3/16-inch flat-bladed screwdriver
- Adjustable wrench
- 3/16-inch hex nutdriver
- 9-pin serial loopback connector (Part number 438-73)
- 25-pin parallel loopback connector (Part number 438-64).

Safety Precautions

Warning: Avoid shock and personal injury. Use the following precautions when servicing this computer:

- Disconnect AC power before opening the cabinet.
- Remove all jewelry.
- Verify correct line cord selection.
- Use a grounded AC power source.

Base Computer

The base computer provides all processing functions, disk drive operations, keyboard and video interfacing.

The base computer contains the following major assemblies:

- System board
- Bus extender card (backplane)
- System memory card
- Secondary storage (3.5-inch 1.4M floppy drive; 80M or 200M hard disk drive, depending on model)
- High-Performance VGA video card (or 1024 x 768 TIGA video card with VGA daughterboard depending on model)
- Enhanced 101-key keyboard
- Disk drive controller card
- Cabinet
- Power Supply.

System Board — The system board contains all circuitry for processing and interfacing within the computer:

- 80486 CPU with internal numeric co-processor
- Posted Write Array
- High performance Burst Mode Memory Controller
- EISA and ISA bus control logic
- System Control Processor and Interface
- Non-volatile configuration storage
- Real-time Clock/Calendar
- Serial, Parallel, and Keyboard port communication logic.

Bus Extender Card (Backplane) — This card occupies the only bus slot on the system board. It provides the signals from the system board to the five EISA bus slots (including the PC/AT signals of the ISA bus) which reside on this card.

System Memory Card — The system memory card contains sixteen SIMM sockets each with a 36-bit wide data path (32 data bits and 4 parity bits). For maximum system performance, SIMMs should be installed in pairs to form a 64-bit wide memory bus. The SIMM pairs may be installed in any order (for example, one megabyte pairs may be followed by four megabyte pairs). The system memory card plugs into the system board in a proprietary connector, perpendicular to the system board. The card may be easily removed to allow for easy installation of additional memory. The computer comes standard with 4 megabytes of memory installed on this card (1M SIMMs). Memory expansion beyond this card may be accomplished by using optional EISA or ISA bus memory cards plugged into the bus extender card.

Secondary Storage — The computer supports these four types of floppy disk drives:

- 720K, 3.5-inch
- 1.4M, 3.5-inch (comes standard with base computer)
- 360K, 5.25-inch, half-height
- 1.2M, 5.25-inch, half-height.

The computer accepts any 3.5-inch hard disk drive with a SCSI or IDE interface. Depending on model number, the computer comes standard with either an 80M or 200M IDE hard disk drive.

In addition to the above drives, the computer will accept a 5.25-inch magnetic tape back-up unit.

High-Performance VGA Video Card — This 16-bit VGA card is VGA register compatible, while supporting EGA, CGA, MDA, and Hercules® through BIOS calls. It is an AT compatible card that may be placed in any of the open slots on the bus extender card. Some models are shipped with a TIGA video card that offers very high resolution (1024 x 768). The TIGA card has a daughterboard to provide VGA functions.

Enhanced 101-Key Keyboard — The computer comes with a detacheable 101-key keyboard.

Disk Drive Controller Card — The disk controller card used in this computer is a high-performance controller which supports two floppy disk drives, two IDE hard disk drives, and seven SCSI (Small Computer Systems Interface) peripherals (daisy chained).

Note: The factory-supplied drive controller card does not support ST-506 types of hard disk drives. If an ST-506 type drive is to be used, the factory-supplied controller card must be replaced with an appropriate ST-506 controller card (and CFG file).

Cabinet — The cabinet may sit flat in a desktop configuration with the monitor on top, or may be used on end as a tower configuration.

Power Supply — The power supply provides the following outputs: +5 VDC, +12 VDC, and -12 VDC. See the Specifications section and Chapter 4 in this manual for information on managing power supply capacity when adding hardware options.

Optional Hardware

The following options are available for this computer:

- ZA-3800-ME 1M RAM Expansion Kit
- ZA-3800-MK 4M RAM Expansion Kit
- ZA-3800-TD 150M SCSI Tape Drive
- ZD-144 3.5-inch 1.4M Internal Floppy Disk Drive
- ZD-12-A 5.25-inch 1.2M Internal Floppy Disk Drive
- ZA-3700-CS Computer Stand.

Chapter 2

Operation

This chapter covers power-up, resetting the computer, the Monitor program, and other operating information for the Z-486/25E workstation.

Power Up

Turn the computer on using the power switch mounted on the front panel.

When power is applied:

- The power supply fan starts
- The keyboard resets (status LEDs blink), NUM LOCK remains lit
- Disk drives initialize (access indicators light, heads seek)
- Internal power-up self-tests complete
- A blinking cursor appears on the display
- The operating system loads from the hard disk drive or the floppy disk drive (when autoboot option is configured).

If the operating system is not installed, or it is not present on the disk, one of the following error messages appears:

```
+++ DISK ERROR: Drive not ready! +++

No bootable partitions

Non-system disk

Not a bootable partition
```

Refer to the operating system documentation for installing operating system software.

If the computer detects faults during the power-up sequence, error messages may appear on the display (if the computer can drive the display). For further information on error messages, consult "Power-Up and Error Messages" in Chapter 3.

Resetting the Computer

There are three different ways to reset the computer:

1. Press and hold the CTRL, ALT, and DEL keys, then release them. This resets the CPU, reinitializes the computer and initiates the autoboot sequence.

2. Press and hold the CTRL, ALT, INS keys, then release them. This resets the CPU, reinitializes the computer and enters the Monitor program.

3. Turn the computer off, wait 15 seconds, then turn it back on. All circuits are reset to the power-on state.

The Monitor Program

The MFM-400 Monitor program contains:

- Power-up tests to detect problems that would prevent additional tests or an operating system from loading
- The boot command to load the operating system
- User-selectable tests to check the disk drives, keyboard, and memory
- Video commands to display a color bar or set video and scroll modes
- Programming commands.

Entering the Monitor Program

Use the following command to enter the Monitor program:

CTRL-ALT-INS — Press and hold the CTRL, ALT, and INS keys and then release them. A message similar to the following appears:

```
MFM-400 Monitor, Version x.xx
Memory size: xxxK + xxxxK
Enter "?" for help.
->_
```

The first line indicates the ROM version. The second line indicates how much memory is installed, including base and extended memory. The third line gives the syntax for the help command. The fourth line shows the Monitor prompt indicating the Monitor program is waiting for a command to be entered.

Once the computer has entered the Monitor program, type a question mark (?) and press ENTER to display the Monitor program command summary menu.

All of the commands listed in the command summary may be used. Use the syntax (exact command entry) shown, type the command, then press ENTER. If the syntax is wrong, the computer reports that an invalid command was entered. The command syntax uses:

- Brackets [*option*] indicate optional entries
- Braces { *choice* | *choice* } indicate a choice of entries
- Angle braces <*variable*> indicate specified variables.

Boot Command

The boot process loads the operating system from a disk into computer memory. The command syntax is:

B[{F|W}][{0|1|2|3}][:<PARTITION>]

Extend the boot command to BF (boot from floppy) or BW (boot from winchester, a reference to the hard disk) to boot a specific drive. If more than one drive type is installed, add the drive numbers (0 or 1) and partition numbers as required.

Error messages appear if an attempt is made to boot from a non-existent drive. To correct this, access the Monitor program and enter the correct boot command. For more information about error messages, refer to Chapter 3 in this manual.

Notice: If the computer has been configured in such a way that it is not possible to boot, use the XR command. At the Monitor prompt, entering XR will load a default configuration and allow the computer to boot. The ECU program should then be used to reconfigure the system. This command is useful only when the computer has been configured in such a way as to make it unbootable.

User Tests

The Monitor program contains five user-selectable tests. To access the test menu, type TEST at the Monitor prompt and press ENTER. The following menu appears:

```
CHOOSE ONE OF THE FOLLOWING:

1. DISK READ TEST
2. KEYBOARD TEST
3. BASE MEMORY TEST
4. EXTENDED MEMORY TEST
5. POWER-UP TEST
6. EXIT

ENTER YOUR CHOICE:
```

To run a test, type the number that corresponds to the test. With the exception of the keyboard test, each test continues to run until an error is detected or the test is halted.

To stop a test, press the ESC key once. Press the ESC key a second time to return to the test menu. There you can select another test or select EXIT to return to the Monitor prompt.

All tests, except for the keyboard test, display a test count similar to the following:

```
SAMPLE TEST

                    TEST COUNT = x

TYPE <ESC> TO ABORT
```

If an error is detected during the test, information about the error appears on the display.

Disk Read Test — This test continuously reads the first sector of track 0 on the test drive. To change the test drive, manually boot from the drive you want to test. It is not necessary for the boot operation to actually load the operating system. There must be a formatted disk in the drive to run the test.

Successful completion of this test only indicates that the drive can read from the disk. If the computer still fails to boot, problems could exist with memory or related control circuits.

Keyboard Test — This test checks the operation of most keys on the keyboard. Valid entries display an ASCII character or symbol and a key scan code each time a key is pressed. The following keys cannot be tested:

- PRINT SCREEN
- SCROLL LOCK
- PAUSE
- CAPS LOCK
- SHIFT
- CTRL
- ALT
- NUM LOCK
- ESC.

The *TM-4100 Programmer's Technical Reference Manual* contains a detailed listing of scan codes for this computer.

Base Memory Test — All memory in the first megabyte of the system memory map, including video memory, is tested.

While the test is running, a clicking sound can be heard. When the test reaches the video memory area, a series of moving patterns is displayed on the screen.

Extended Memory Test — All installed memory above the 1 megabyte base memory area is tested. Since no video memory exists in this area, no patterns appear.

Power-up Test — This test continuously repeats the power-up tests used during startup. This test checks the following:

- Crystal frequencies
- Interrupt controllers
- DMA controllers
- Disk drive controller
- Timer 1 interrupt
- CPU
- ROM
- RAM.

Chapter 3

Troubleshooting

This chapter provides information on troubleshooting the computer. This information will assist in diagnosing to the major assembly level.

Warning: To prevent shock, disconnect the computer from the AC power source before servicing.

Static Precautions

To prevent component damage from static discharges, use the following precautions:

- Do not remove any static-sensitive device from its protective packaging until it is ready to be installed.
- Equalize the static electricity between the work surface, the device, and yourself by touching the work surface with one hand and then picking up the device with the other hand.
- Once the device is removed from its protective packaging, do not set it down or let go of it until it is either installed in the computer or returned to its protective packaging.

Troubleshooting Procedure

To successfully troubleshoot this computer in the shortest period of time, follow this procedure:

1. Run the ECU program to check the configuration of the base computer system and any optional cards. This will verify that peripherals such as disk drives, printers, and other I/O devices have been enabled. The ECU program also allows you to view switch settings and recommended default settings of cards which may require hardware configuration (refer to Chapter 5 of this manual for hardware configuration information). This information may be printed for reference later. If the computer is properly configured, proceed to the next step.
2. Remove the cover (refer to Chapter 4 of this manual) and check for damage to circuit cards or chassis parts such as dented or bent metal parts, nicked or cut wires, cracked circuit boards, evidence of heat damage such as discoloration or melting, connector pins that are bent or touching, and broken socket connectors. If the problem is not evident, proceed to the next step.

3. The troubleshooting charts offer a structured approach to servicing this computer. Refer to the section on troubleshooting charts later in this chapter.

Power-Up

At power-up, the computer begins an initialization process to check internal circuits and components. If the computer encounters a problem during this process, an error message appears on the monitor screen. These error messages are explained in detail later in this chapter. Some initialization actions produce a visual or audible signal. The following events should occur when power is applied to the computer:

1. The power supply fan starts.
2. The keyboard resets, status LED's blink, and the NUM LOCK LED remains lit.
3. Disk drives initialize (access indicators light, heads seek).
4. The prompt appears on the monitor display.
5. Internal power-up self-tests complete.
6. Computer attempts to autoboot.

Status LEDs

There are two sets of status LEDs in the computer. The power status group is located on the system board where the power supply connector plugs onto the system board. As the computer powers up, all of these LEDs turn on. Figure 3-1 illustrates these LEDs and the associated signals.

Figure 3-1. *Power Status LEDs*

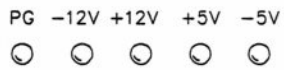

The second set of LEDs, the diagnostic LEDs, is also located on the system board. Figure 3-2 illustrates this group of LEDs.

Figure 3-2. *Diagnostic LEDs*

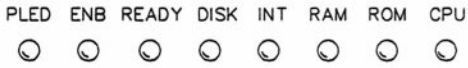

As the computer powers up, all the diagnostic LEDs light and then, one by one, each goes out. As each LED goes out, it indicates that the computer has passed a portion of the internal power-up tests. If the computer is configured to autoboot, only the PLED LED will remain lit. If a Monitor prompt appears on the display, the RDY and PLED LEDs remain lit. The diagnostic LEDs are used in the troubleshooting charts that follow to assist in repairing the computer.

Troubleshooting Charts

Notice: Before removing circuit cards from the computer, be sure power is disconnected. Do not remove circuit cards with power applied as damage to circuit card or computer (or both) may result.

The following charts are organized to simplify troubleshooting efforts. Start with the General System Troubleshooting Chart, Figure 3-3. This chart provides immediate repair recommendations or directs you to other, more detailed charts. These charts identify the faulty assembly or recommend further tests to isolate the problem. Follow the sequence through until the problem is located and repaired.

Each block in the chart represents a step in troubleshooting the computer. Some blocks contain a smaller numbered block. The smaller block is a reference to the notes that appear on the troubleshooting charts.

Dashed lines found in the charts indicate a sequence of steps to be performed to solve the problem. Perform the steps in the order indicated. They are listed with the most likely solution first and the least likely solution last.

Figure 3-3. *General System Troubleshooting Chart*

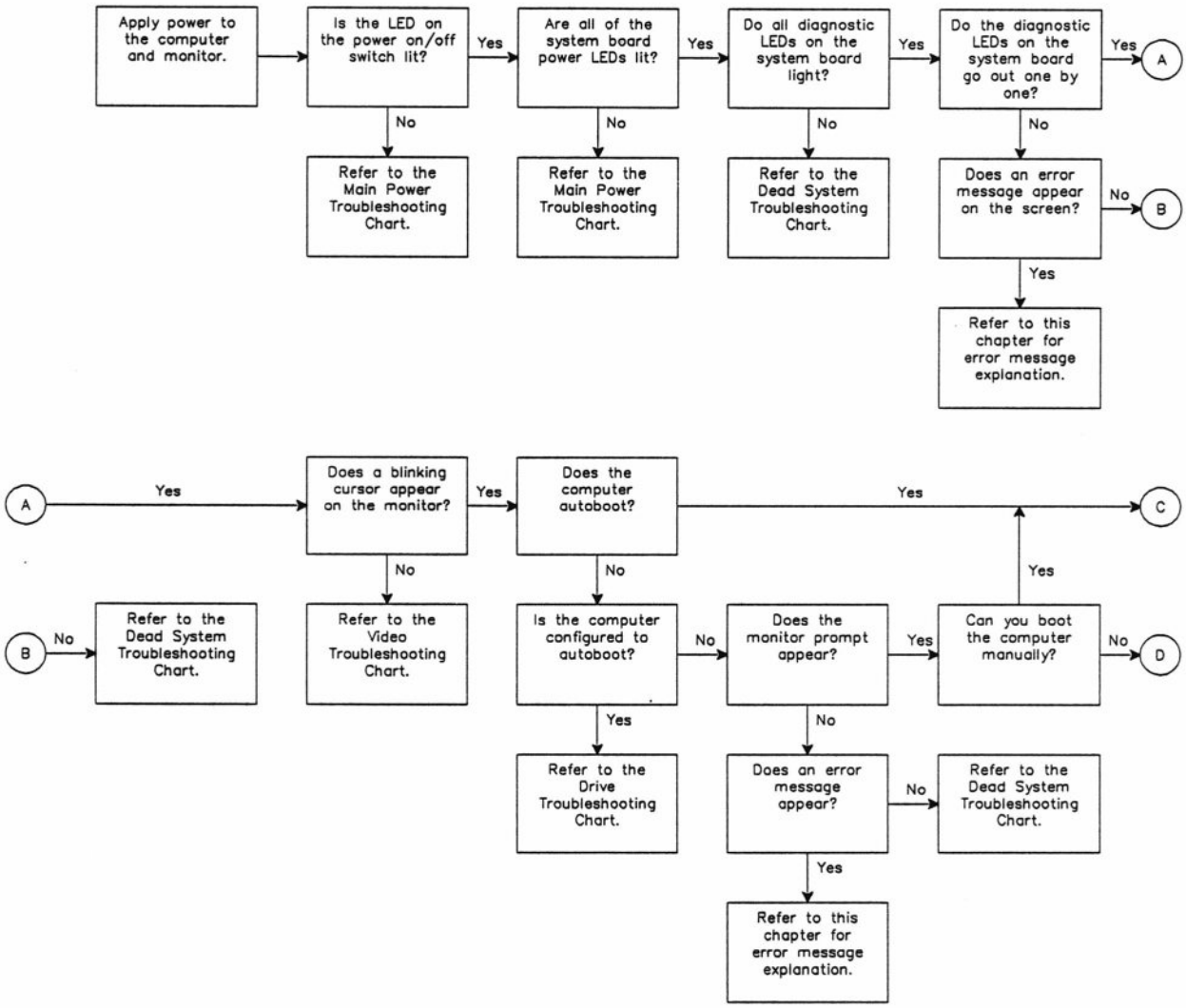

Figure 3-4. *General System Troubleshooting Chart (continued)*

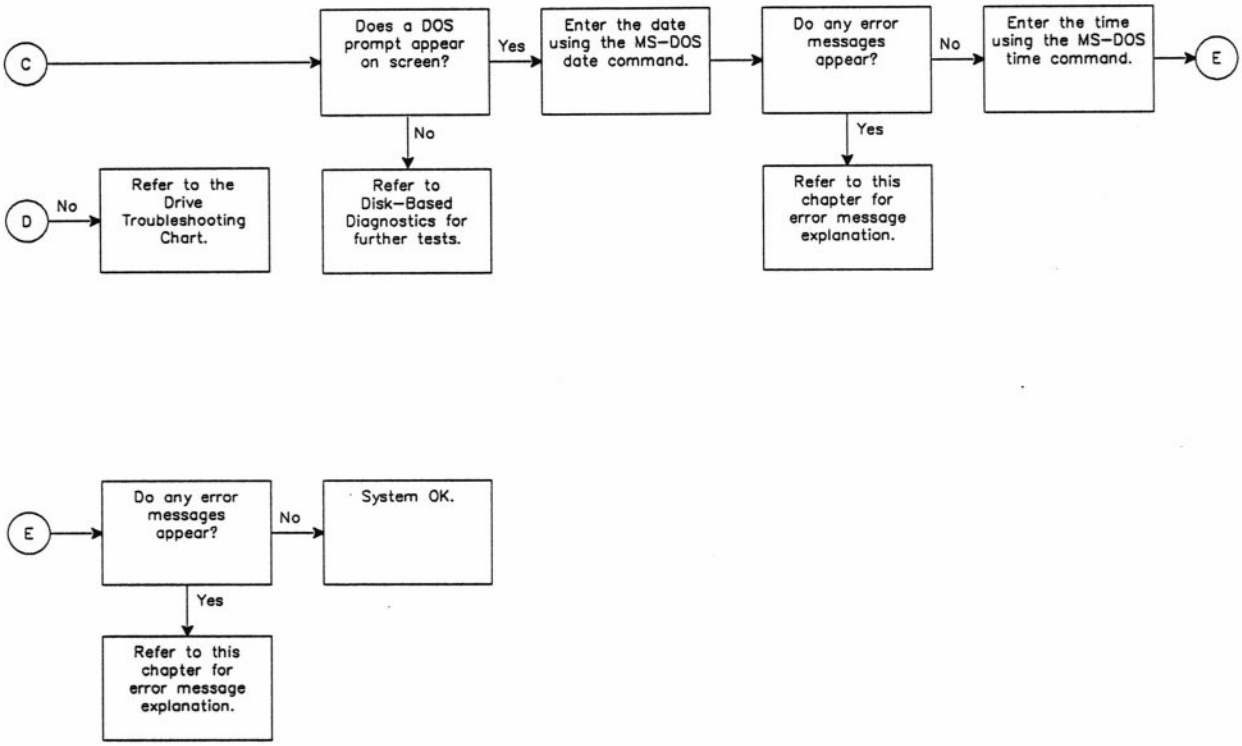

Figure 3-5. *Dead System Troubleshooting Chart*

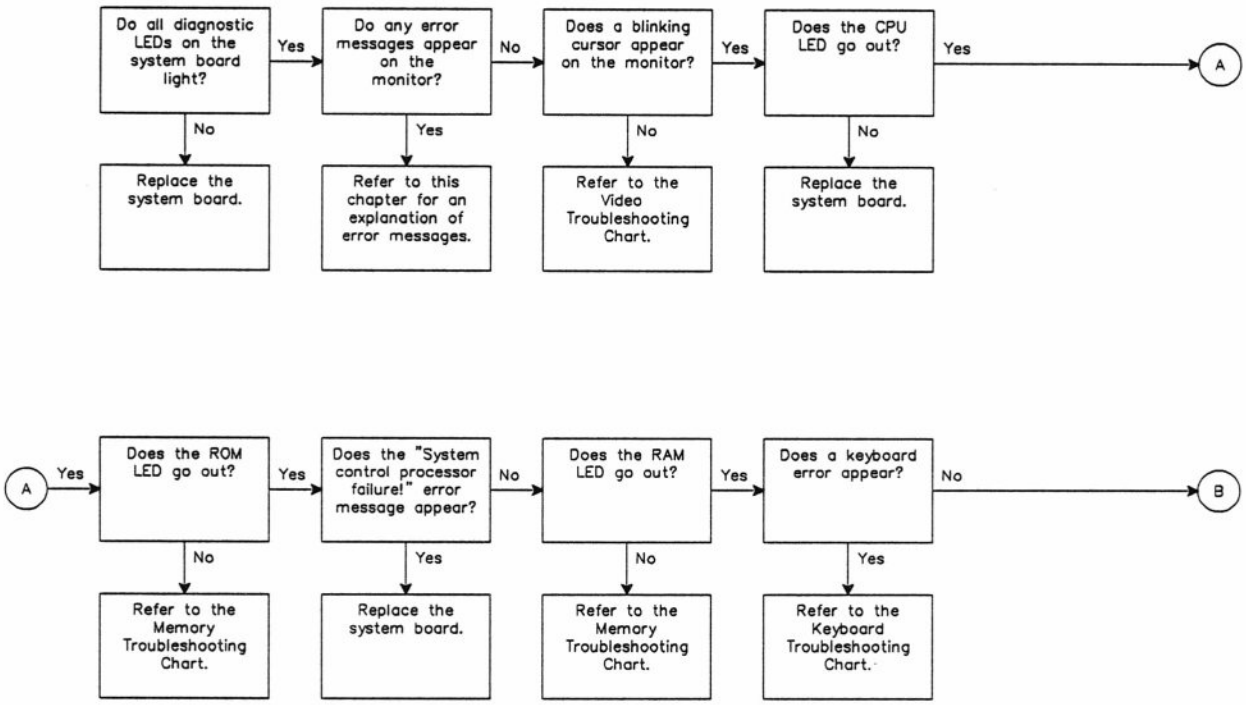

Figure 3-6. *Dead System Troubleshooting Chart (continued)*

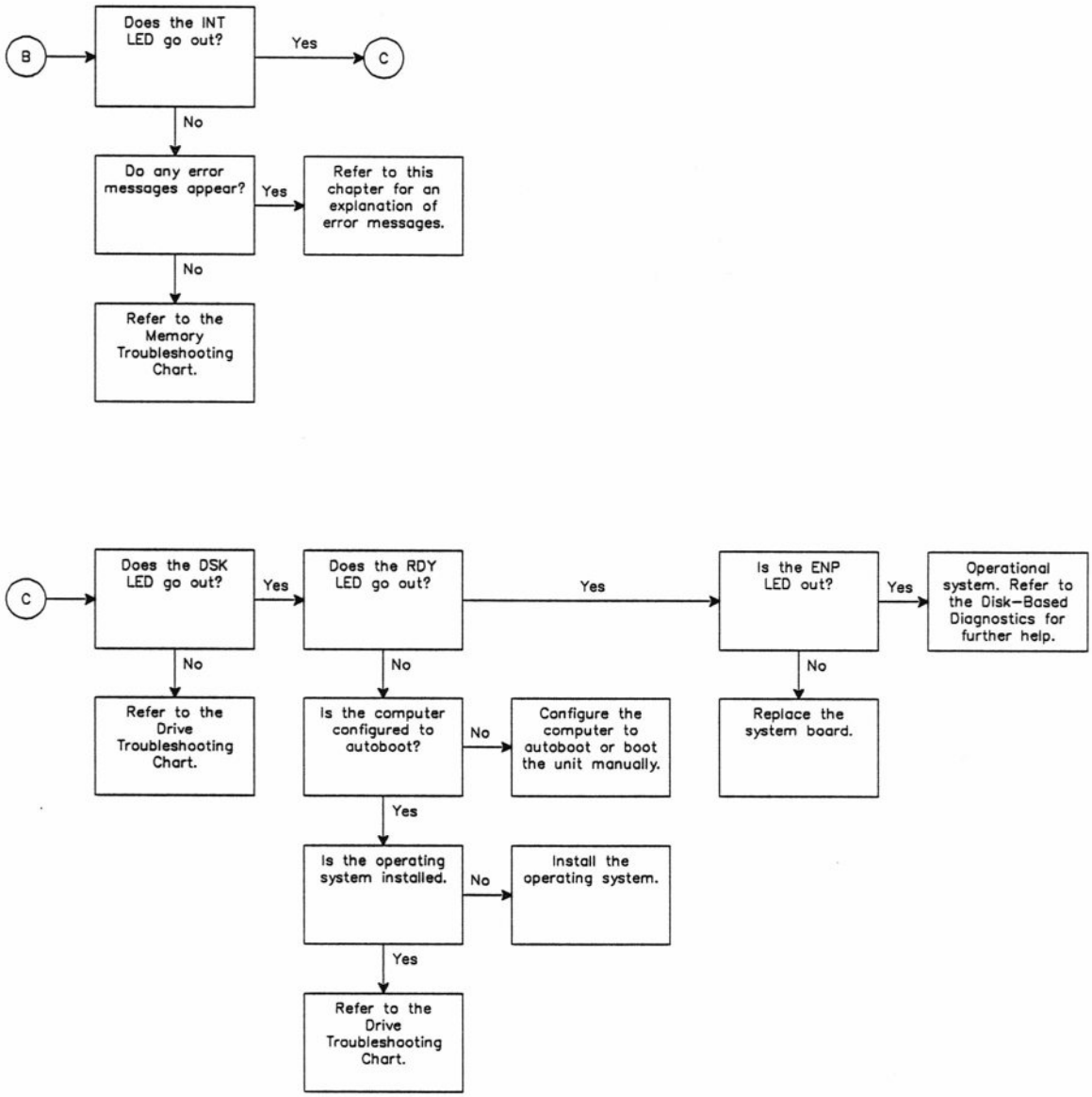

Figure 3-7. *Keyboard Troubleshooting Chart*

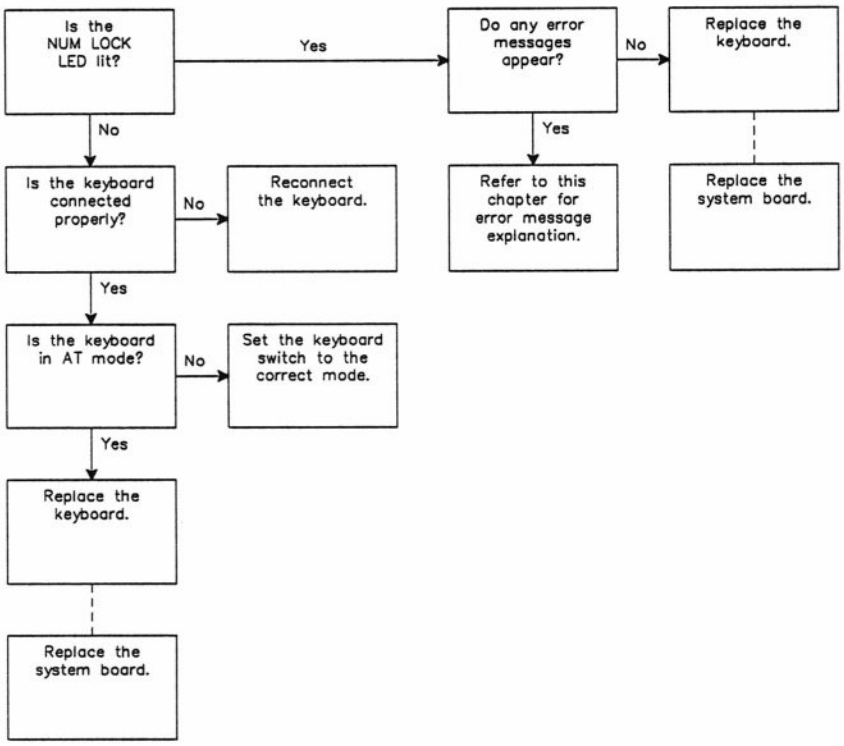

Figure 3-8. *Parallel/Serial Port Troubleshooting Chart*

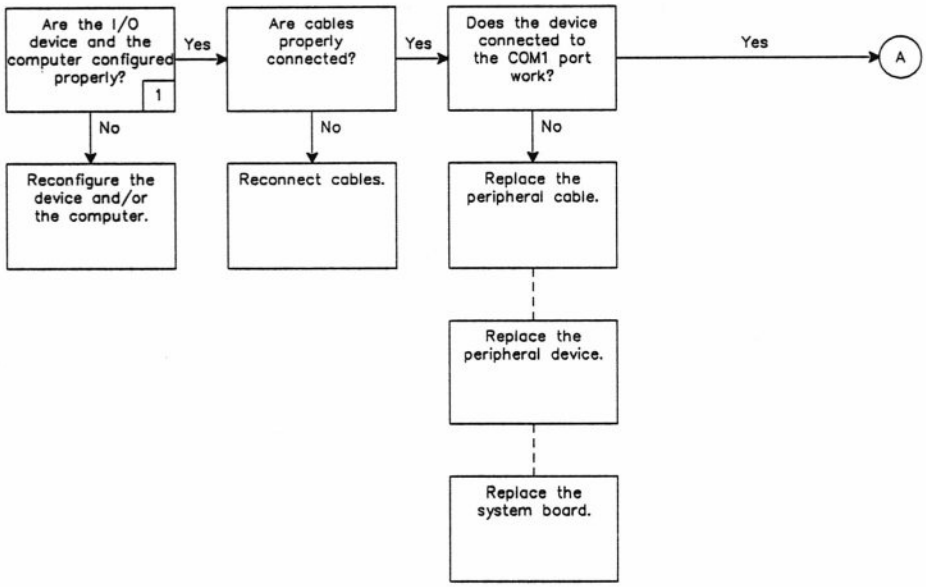

NOTES

1. Run the ECU program to verify proper computer configuration, I/O device(s) configuration, and to verify that the device(s) is enabled. Check the peripheral device documentation to verify hardware configuration.

Figure 3-9. *Parallel/Serial Port Troubleshooting Chart (continued)*

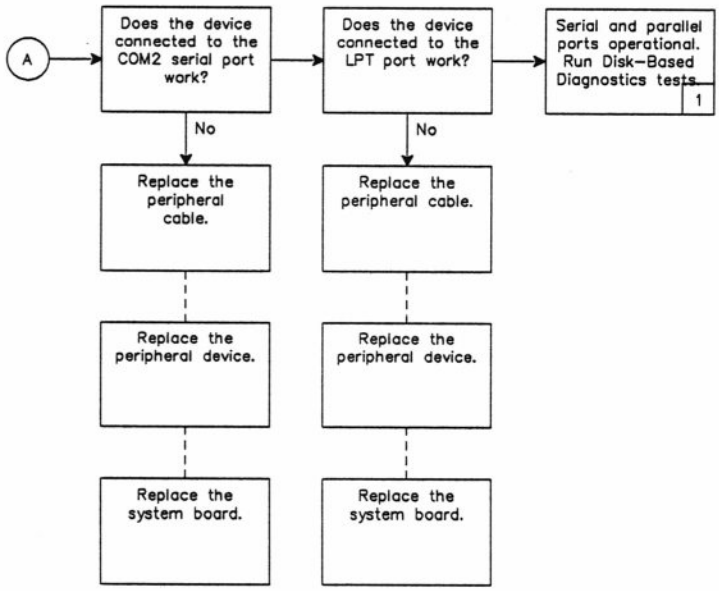

NOTES

1. Disk-based diagnostics tests require the serial loopback connector (438-73) and the parallel loopback connector (438-64)

Figure 3-10. *Drive Troubleshooting Chart*

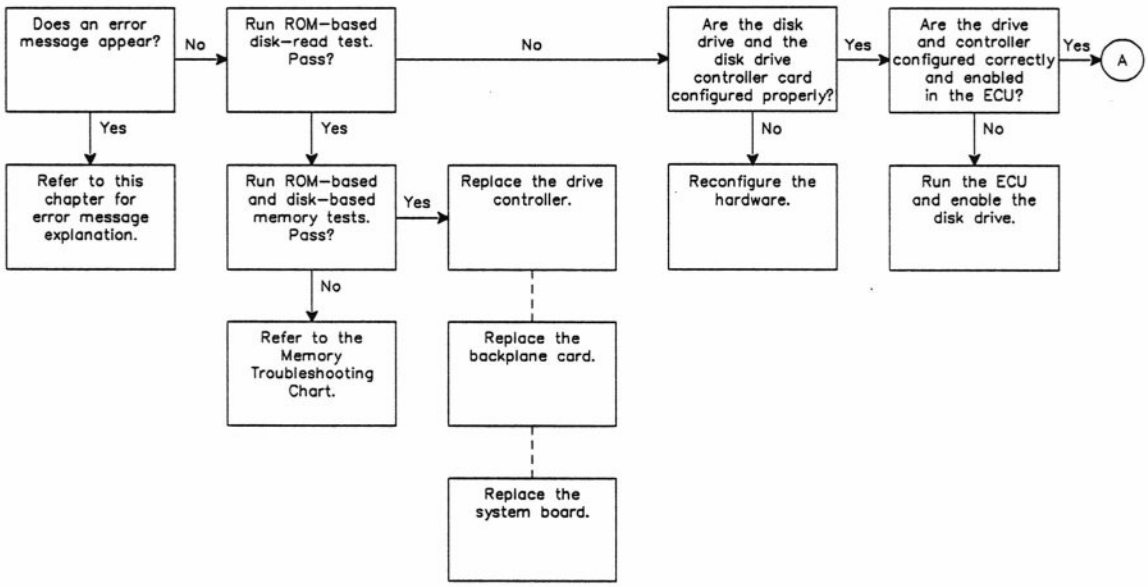

Figure 3-11. *Drive Troubleshooting Chart (continued)*

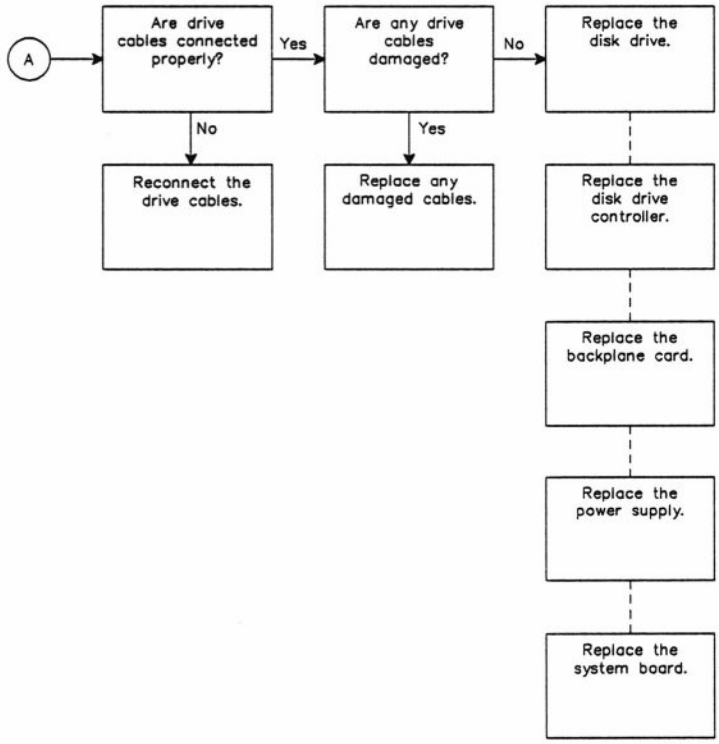

Figure 3-12. *Video Troubleshooting Chart*

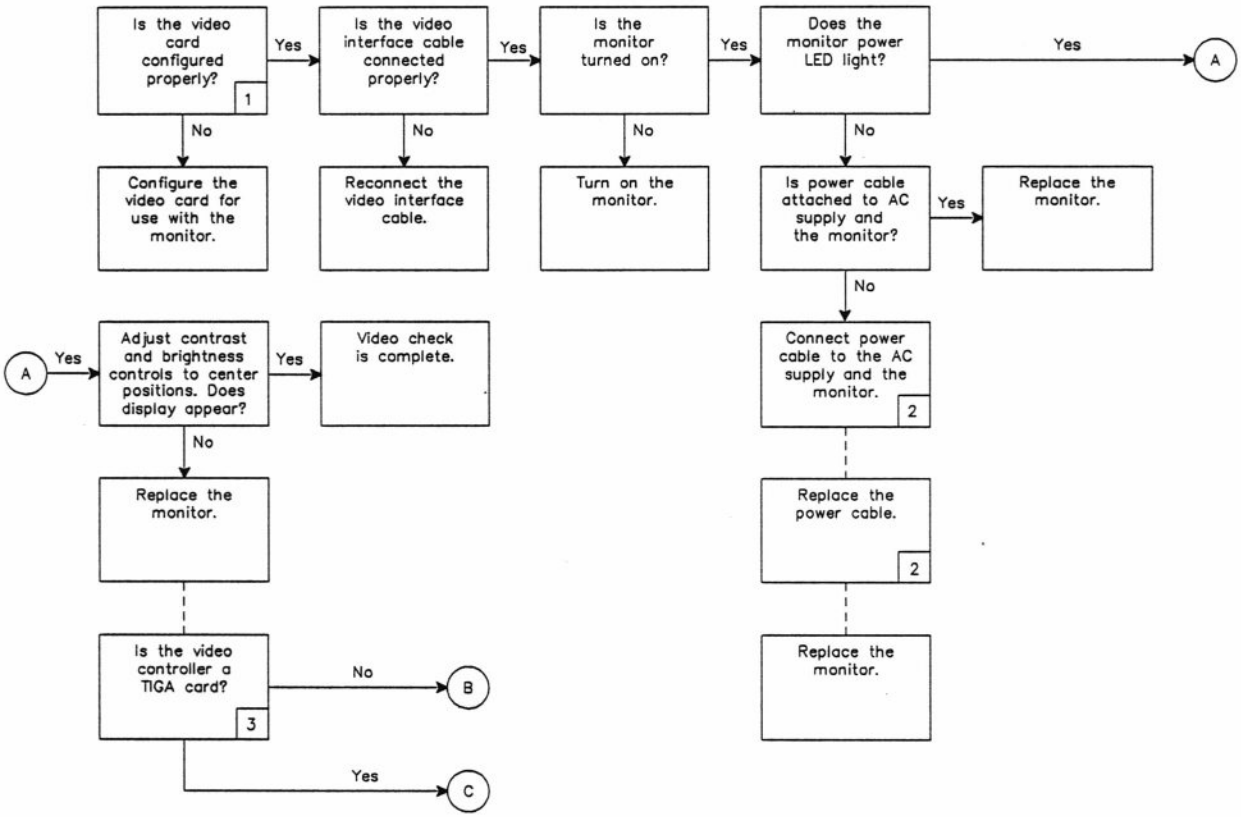

NOTES
1. Refer to Chapter 5 in this manual or manufacturer's documentation for hardware configuration information. Also, run the ECU to verify proper configuration.
2. On some monitors the power cable cannot be removed. Replace monitor instead.
3. If a TIGA video card is installed, run the TIGA video diagnostics.

Figure 3-13. *Video Troubleshooting Chart (continued)*

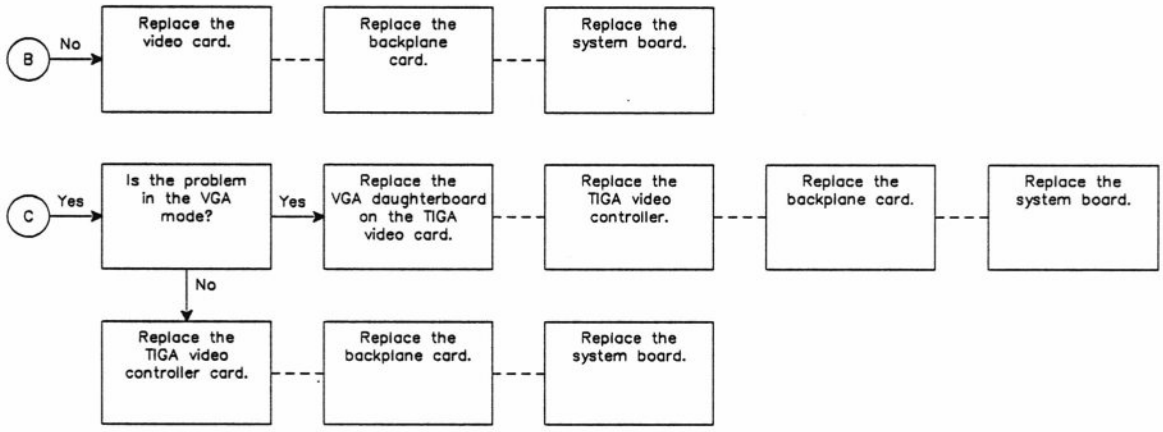

Figure 3-14. *Power Troubleshooting Chart*

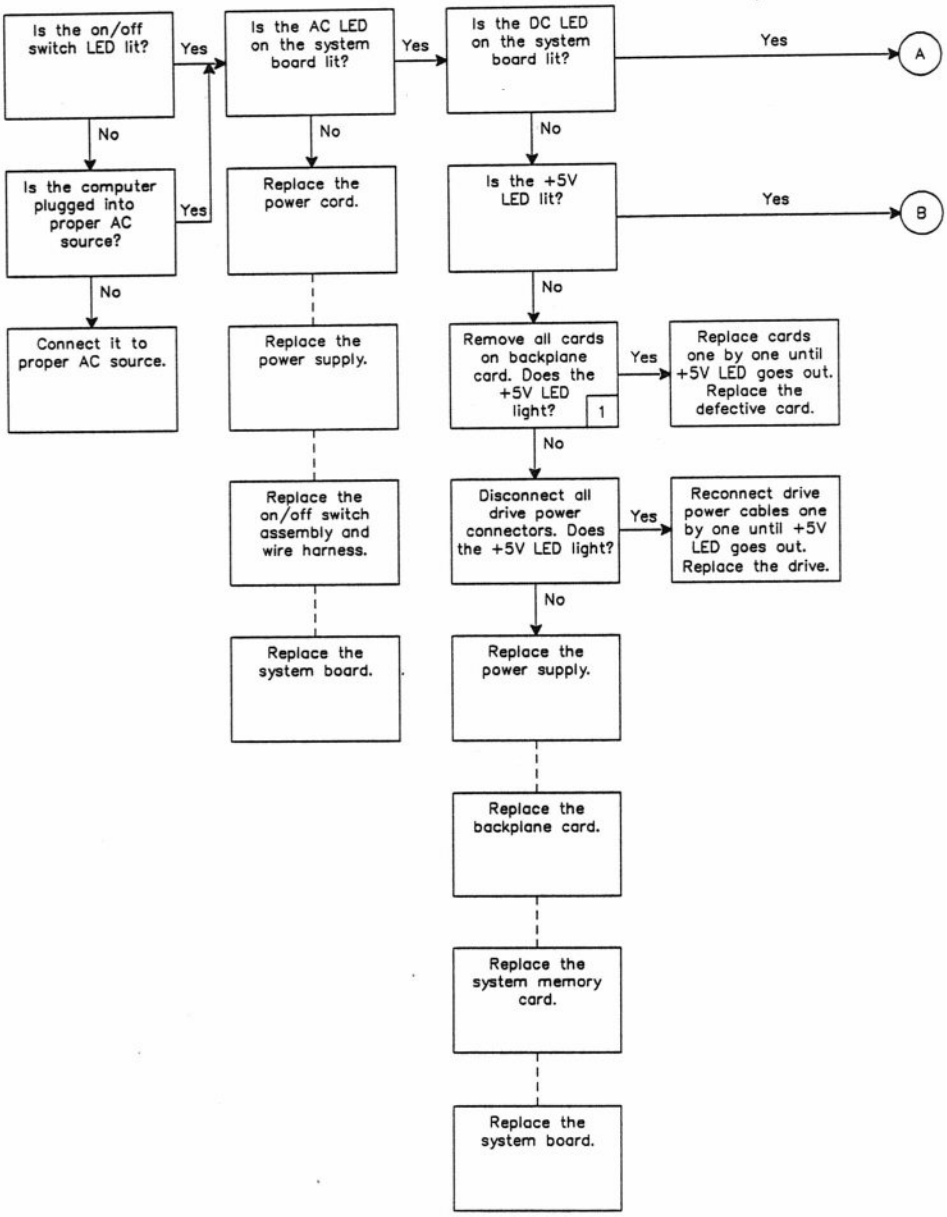

NOTES

1. Do not remove or install cards with power applied. Refer to Chapter 4 of this manual for information on power capacity of this computer.

Figure 3-15. *Power Troubleshooting Chart (continued)*

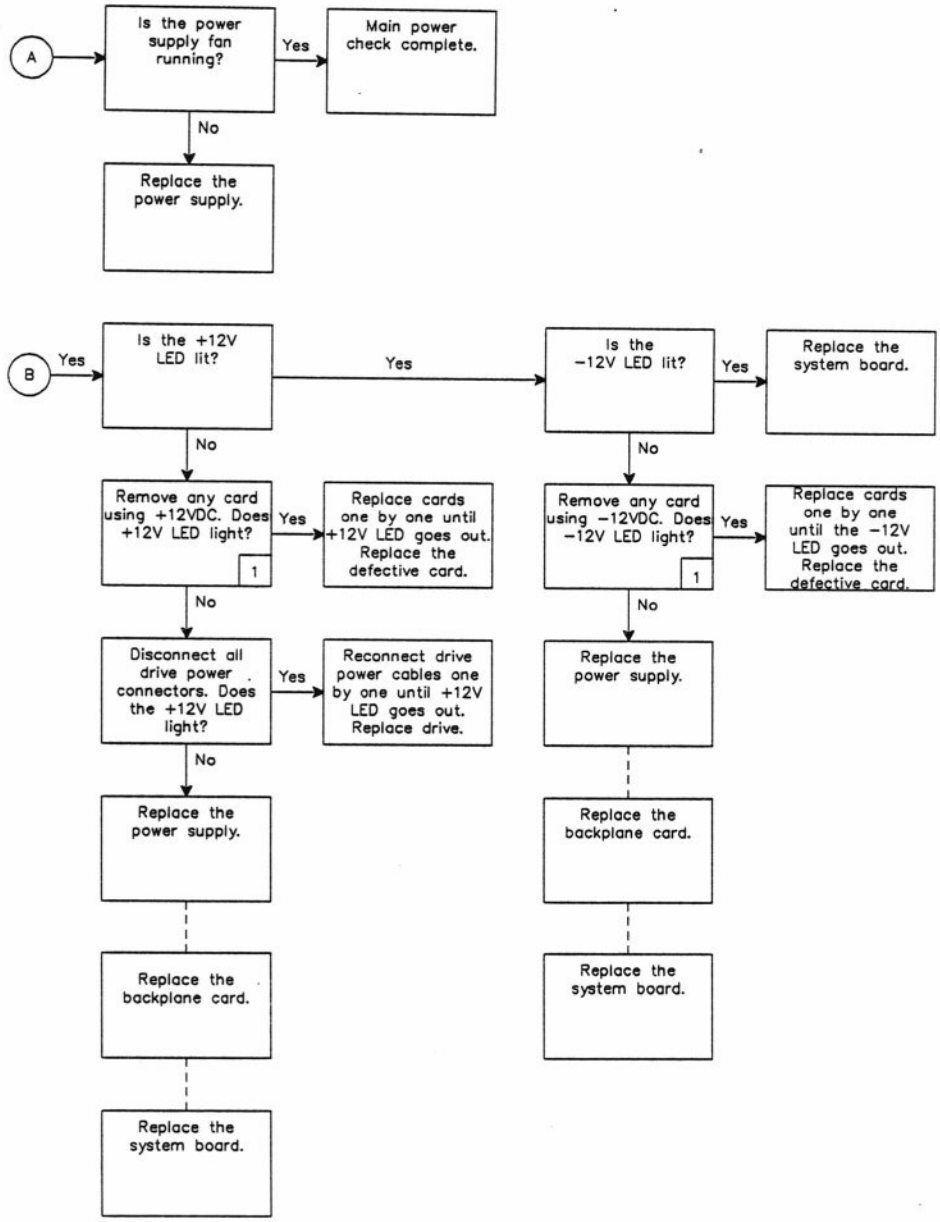

NOTES
1. Do not remove or install cards with power applied.

Figure 3-16. *Memory Troubleshooting Chart*

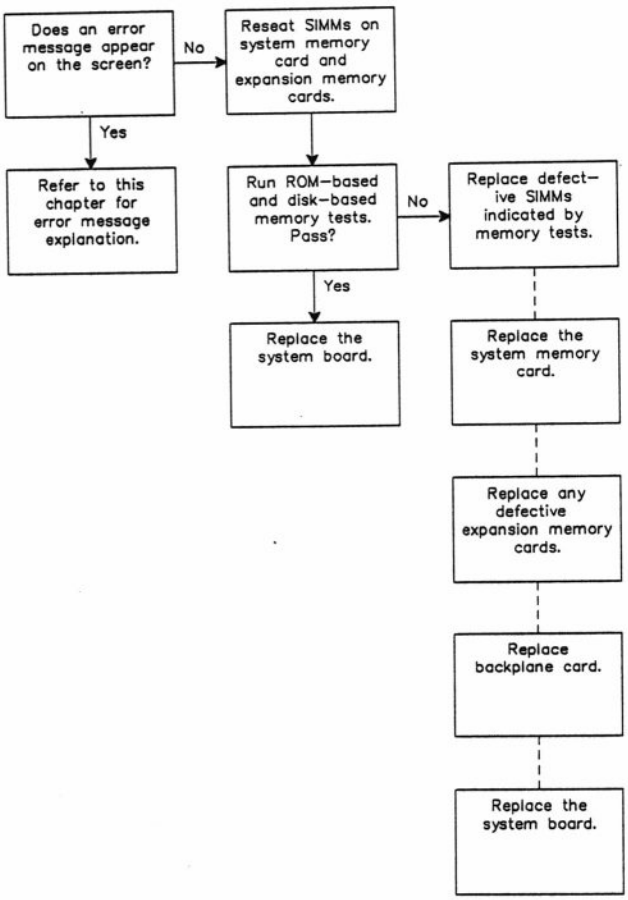

Disk-Based Diagnostics

An optional disk-based diagnostics package is available for this computer. The disk-based diagnostics provide a more extensive and detailed series of tests. Refer to Chapter 1 of this manual for ordering information.

If a TIGA video controller card is installed in the computer, a TIGA diagnostics package is available on the TIGA installation and utility disk.

Power-Up and Error Messages

If the computer encounters any problems during self-tests or power-up, it displays a message on the monitor. The following list of error messages are arranged in alphabetical order, along with the descriptions of the probable cause(s), and suggested steps to correct the problem.

DISK ERROR: Bad disk controller!

This message occurs if a disk drive cable is damaged or not securely connected, if the controller card is not seated properly, or if a hardware failure occurs.

Corrective steps:

- Inspect the disk drive power and data cables for nicks or damage.
- Make certain all cables are properly connected.
- Reseat the drive controller card.
- Use the ROM-based "Disk Read Test" to determine whether the drive or the controller card is at fault (it may also help to run the disk-based diagnostics program to help identify the problem). Replace the failing unit.

DISK ERROR: CRC error!

This error indicates a faulty disk (unformatted disk, corrupted data on the disk, etc.), a hardware failure, or a loose or faulty drive cable. The problem could also be the drive controller card.

Corrective steps:

- Try another disk. If the problem disappears, the disk is bad. Copy any readable files to a good disk and reformat the faulty disk. If bad sectors are reported, discard the disk.
- If more than one disk drive is installed in the computer, try the other disk drive. If the second disk drive works, replace the first drive.
- Inspect all power and signal cables for nicks or damage.
- Inspect all cables for proper installation.
- Replace the disk controller card using the same model as the original.

DISK ERROR: Data corrected!

The computer detected an error, but was able to correct the data.

Corrective steps:

- If this message occurs on a regular basis, refer to "DISK ERROR: CRC error".
- Use disk-based diagnostics to test the drive.

DISK ERROR: Disk not bootable!

The computer attempted to boot an unformated or non-system disk, or the disk is not usable.

Corrective steps:

- Make certain that the floppy disk is bootable and properly engaged in the drive. If not, reformat the disk and install the operating system.
- Try using another copy of the applications software or data disk.
- When using a hard disk drive make sure a bootable partition is specified. If not, specify the correct partition and reboot.
- For a hard disk drive, first try to reinstall the operating system. If necessary, back up the drive and use PREP to reinitialize the disk. Reformat the drive and install the operating system. As a last resort, replace the hard disk drive.

DISK ERROR: DMA overrun!

The problem is caused by a DMA hardware failure.

Corrective steps:

- Replace the system board.

DISK ERROR: Drive not ready!

There is no disk in the floppy drive, the disk is not fully inserted, or a drive hardware failure occurred. This message also appears if the computer attempts to access a non-existent disk drive.

Corrective steps:

- Verify that the correct drive was specified.
- Make certain the disk is fully inserted in the drive, and the door is closed and latched. Try a different bootable disk in the floppy disk drive and retry the boot command. Run the disk-based diagnostics program to find the problem.
- If this message occurs when using the hard disk drive, try to reboot the computer. If problems persist run the disk-based diagnostics to isolate the problem.
- Replace the drive.

DISK ERROR: Invalid address mark!

This message occurs if the hard or floppy disk is damaged or has not been properly formatted.

Corrective steps:

- Copy any readable files to a good disk and reformat the faulty disk. If bad sectors are reported, discard the disk.
- If the problem occurs on a hard disk, three options are available:
  - Reformat the hard disk.
  - Run PREP, then reformat the hard disk.
  - Replace the hard disk drive.

Note: FORMAT and PREP will destroy all data on the drive. Copy any readable files to floppy disks before proceeding.

DISK ERROR: Invalid data read!

The floppy disk is damaged or was not properly formatted.

Corrective steps:

- Copy any readable files to a good disk and format the faulty disk. If bad sectors are reported, discard the disk.

DISK ERROR: Must run configuration utility to boot from hard drive!

The ECU configuration program contains incorrect hard disk drive configuration information.

Corrective steps:

- Use the ECU program to specify the correct hard disk drive type for the boot drive (refer to the owner's manual for ECU information).

DISK ERROR: Sector not found!

The computer attempted to access an unformatted or damaged floppy disk.

Corrective steps:

- Copy any readable files to a good disk and reformat the faulty disk. If bad sectors are reported, discard the disk.

DISK ERROR: Seek failure!

The computer attempted to access an unformatted or damaged floppy disk.

Corrective steps:

- Copy any readable files to another disk and format the disk. If bad sectors are reported, discard the disk.

Divide by zero!

The power-up self-tests failed or a software failure occured. This message may also appear if the computer is turned off, then back on again quickly.

Corrective steps:

- Try another copy of the software, or have the customer contact the software manufacturer or dealer to report the problem. Unless this message occurs during the power-up sequence, the problem is likely to be in the software.

- Turn the computer off, wait 15 seconds, turn it back on again. If the message reappears, replace the system board.

Error reading partition boot code

This message indicates a problem in the hard disk drive media such as a bad first logical sector.

Corrective steps:

- Check the hard disk drive setup using the ECU program.
- Back up the hard disk drive.
- Remove the partition where the error message is generated and recreate the partition (maps out the bad sector).
- Reinstall the operating system on the new partition.
- As a last resort, prep the entire hard disk drive and reinstall the partitions and operating system.

Errors found! Please press <Esc> to continue

This message will be displayed at the bottom of the screen following another error message. The first message indicates what error halted operation. Its purpose is to make the user aware that errors exist before continuing the boot process.

Corrective steps:

- Refer to the first error message and follow the instructions to resolve that problem.

Errors found: Please unlock keyboard then press <Esc> to continue

The computer was powered up with the keyboard locked (by software).

Corrective steps:

- Enter the required password.

ERROR: Bad configuration information found in CMOS!

This message normally appears after real-time clock replacement. It also could indicate a problem in the RTC chip.

Corrective steps:

- Use the ECU configuration program to verify or re-enter the configuration information.
- Refer to "Real-Time Clock IC Replacement" in Chapter 4 and replace the real-time clock IC.

ERROR: Bad SIMM Module on Expansion Board!

This message indicates a problem on an expansion memory card.

Corrective steps:

- Check memory SIMMs on the expansion card to be sure they are properly seated.
- Swap the installed SIMMs with each other. If the problem disappears, the module was not installed correctly. If the problem moves, a module is defective.
- Use the disk-based diagnostics program to test extended memory. If the tests identify a faulty SIMM module, replace the SIMM or the card.

ERROR: Bad SIMM Module on Main Board! Chip: Uxxx!

A faulty or improperly installed SIMM on the system board can cause this error message to be generated.

Corrective steps:

- Reseat the indicated SIMM, UXXX.
- Replace the indicated SIMM, UXXX.
- Run the disk-based diagnostics for more extensive memory tests.

ERROR: Base memory size error! SETUP: xxxK ACTUAL: yyyK

The amount of base memory specified in the ECU program does not agree with the amount of base memory identified during power-up. For example the system may have been configured for 640K of base memory but at power-up the computer sees only 512K of base memory. The message can also indicate a faulty or improperly installed SIMM or expansion memory card.

Corrective steps:

- Use the ECU program to verify the correct base memory size.
- Inspect the SIMMs for proper installation.
- Use the disk-based diagnostics for more extensive tests. If the computer does not boot, replace the first SIMM and try again. If the tests identify a faulty SIMM, replace it. If the tests identify a CMOS RAM failure, or a problem with the Monitor ROM, replace the indicated chips or the system board. If the tests identify a memory problem on an expansion memory card, replace that card. If the tests are inconclusive, replace the system board.

ERROR: Base memory size too small! SETUP: xxxK ACTUAL: yyyK

Reconfiguring actual base memory as 512K

The base memory size specified during configuration does not agree with the actual base memory size installed in the computer. In order to run the ECU configuration program, there must be at least 512K of base memory specified. This message may also be generated because of a missing or defective expansion memory card or defective system memory on the system board.

Corrective steps:

- The computer will automatically correct this configuration error by temporarily reconfiguring actual base memory as 512K to allow the user to configure the computer using the ECU program. If the ECU program is not run to correct the configuration error, the error message will continue to appear whenever the system is booted up.

- Run the ECU program to properly reconfigure the computer allocating at least 512K of memory as base memory.

- An expansion memory card may cause this message to be generated if the user configured the computer with less than 512K of base memory on the system board and the remainder of base memory on an expansion memory card. If the card is missing or defective the message will appear. Install or replace the expansion memory card or use the ECU to reconfigure the computer to increase base memory on the system board to a minimum of 512K.

- Defective system board memory may also generate this error message. If after doing the above steps the problem persists, run the disk-based diagnostics program to locate the defective system board SIMM and replace it.

- Replace the system board as a last resort.

ERROR: Cannot reset drive!

The disk is not properly installed in the drive, the drive door/latch is not closed, or a hardware failure has occured.

Corrective steps:

- Check the floppy disk to be sure it is inserted correctly in the drive.
- Make sure the drive door is fully closed.
- Replace the drive or the disk controller.

ERROR: CMOS Memory Failure!

The internal CMOS memory (real-time clock) failed the power-up test.

Corrective steps:

- Replace the real-time clock chip as detailed in Chapter 4.

ERROR: CPU failure!

Either the CPU or supporting circuitry suffered a hardware failure.

Corrective steps:

- Replace the system board in the computer.

ERROR: Expansion Bus timeout. Current Bus Master is slot: z!

An EISA master card on the expansion bus held the bus too long. The error message gives the slot number of the master causing the problem. Slot 0 would indicate a CPU problem or a problem with the I/O card.

Corrective steps:

- Replace the expansion card in the slot indicated by the error message.
- If slot 0 is indicated, replace the system board.

ERROR: Extended memory size error! SETUP: xxxxxK ACTUAL: yyyyyK

The amount of extended memory specified in the ECU program does not agree with the amount of extended memory identified during power-up. A faulty or improperly installed SIMM can also create this problem.

Corrective steps:

- Use the ECU program to verify the memory size entry.
- Inspect all SIMMs for proper installation.
- Use the disk-based diagnostics program to test extended memory. If the computer will not boot, replace the first SIMM and try again. If the tests identify a faulty SIMM, replace it. If the problem is on a memory card, replace the indicated memory module, or the card.

ERROR: Fail-safe timer timeout!

This indicates either a software applications problem (a software task is taking too long) or possibly a faulty fail-safe timer chip on the system board.

Corrective steps:

- Try another copy of the software applications program or have the customer contact the software manufacturer or dealer to report the problem.
- If the problem occurs during the power-up sequence, the timer chip is probably faulty. Turn the computer off, wait 15 seconds, and turn it back on. If the message reappears replace the system board.

ERROR: Invalid command!

Some internal process (usually math related) created an illegal processor state. Otherwise, a hardware failure occured. This error also occurs when an illegal command is entered.

Corrective steps:

- Check to be sure the command syntax is correct and re-enter the command.
- Try another copy of the software or have the customer contact the software manufacturer or dealer to report the problem.
- Replace the system board.

ERROR: IOCHK from Expansion Board in slot z!

This error indicates a problem with a card in the slot indicated. Generally the problem is caused by a memory parity error on the card or possibly a backplane problem.

Corrective steps:

- Replace the expansion card in the indicated slot.
- Replace the backplane card.
- Replace the system board.

ERROR: Keyboard not responding or not connected!

The keyboard is not properly connected, or the cable is damaged. This error may also be generated if the computer is powered up after certain peripheral devices (such as a printer).

Corrective steps:

- Verify that the keyboard is properly connected (refer to the owner's manual for proper connection procedure and Chapter 5 of this manual for keyboard configuration information).
- Replace the keyboard.
- If this message occurs frequently, make sure that the computer and peripheral devices are powered up at the same time.

ERROR: Memory parity failure!

The power-up tests detected a memory parity failure.

Corrective steps:

- Inspect all SIMMs for proper installation.
- Use the disk-based diagnostics program to check memory. If the computer does not boot, replace the first SIMM on the system board and try again. If the tests identify a faulty SIMM, replace it or the expansion card the memory is on. If not, replace the system board.

ERROR: No configuration in non-volatile memory!

This indicates that the EISA configuration data has been lost or corrupted in the 8K x 8 EEPROM on the system board. This error message normally appears when a new system board is installed and it is powered up for the first time.

Corrective steps:

- Run the ECU configuration program to restore the lost configuration data.
- If the problem persists it may indicate a faulty 8K x 8 EEPROM. Replace the system board and reconfigure the computer.

ERROR: Non-maskable interrupt!

This message warns of an impending power failure. Either the AC power supply has failed (blown fuse or circuit breaker), the supply has dropped below acceptable operating levels (brownout), or a glitch in the AC source caused the problem. The message also appears if a software program issues an undefined interrupt. Certain machine language commands entered from the Monitor program can also cause this error.

Corrective steps:

- Turn the computer off. If the power supply is at fault, replace it.
- If the AC supply is at fault, do not apply power to the computer system until the supply problem is corrected.
- If a software problem is suspected, have the customer contact the software manufacturer for assistance.

ERROR: Non-volatile memory checksum failure!

The EISA configuration 8K x 8 EEPROM memory has been corrupted. It could be caused by a faulty non-volatile memory chip or in rare cases by a software error.

Corrective steps:

- Run the ECU to reconfigure the non-volatile memory.
- If the problem occurs during the power-up tests, the cause may be due to a faulty 8k x 8 EEPROM chip and the system board should be replaced.
- If the problem occurs only while running a certain software program, have the customer contact the software manufacturer or dealer for assistance.

ERROR: Please replace the back-up battery!

This message is normal after replacing the back-up battery. It can also mean the back-up battery is weak and should be replaced.

Corrective steps:

- If the battery (real-time clock chip) was recently replaced, use the ECU configuration program to enter the proper configuration information for the computer.
- Refer to Chapter 4 and replace the real-time clock chip (contains the battery) and run the ECU configuration program.

ERROR: ROM checksum failure!

The monitor ROM failed the power-up self test. This message may also appear if the computer is turned off, then back on very quickly.

Corrective steps:

- Turn the computer off, wait 15 seconds, and turn it back on.
- If the message reappears, replace the system board.

ERROR: Slot z, ID xxxxxxx: Board ID does not match non-volatile memory!

EISA expansion cards are manufactured with an ID for that particular product. If the actual manufacturer-assigned ID does not match with what has been configured in the ECU configuration data, this error will be generated. This error message will be generated if the user configured the system to accept an EISA board in a certain slot, but puts a different EISA card in that slot. The system expects to find an EISA card in that slot with a certain ID, but instead finds an EISA card there with a different ID.

Corrective steps:

- Be sure the EISA card that was configured to be in the slot is the one that is actually located there.
- If problem remains, replace the EISA expansion card.

ERROR: Slot z, ID xxxxxxx Board not ready!

EISA cards have a set period of time to respond when addressed or this error will be generated.

Corrective steps:

- If this error occurs frequently the EISA card in the indicated slot should be replaced.

ERROR: Slot z, ID xxxxxxx Missing board!

The configuration data in the non-volatile memory tells the computer to expect an EISA card in the indicated slot, but the card does not appear to the computer to be there.

Corrective steps:

- Run the ECU program to reconfigure the computer with the correct information.
- Be sure the EISA expansion card is installed in the slot.
- If the error occurs again, replace the EISA expansion card.

ERROR: Slot z, ID xxxxxxx Slot is not empty!

The computer has been configured to indicate no card in the indicated slot. However, an EISA card with the indicated ID is found in that slot.

Corrective steps:

- Reconfigure the system using the ECU program.

ERROR: Slot z, ID xxxxxxx Unexpected board ID encountered!

The slot indicated is configured to contain a non-EISA card but an EISA card is found there.

Corrective steps:

- Reconfigure the system using the ECU program.

ERROR: Software generated non-maskable interrupt!

This error message is generated by the fail-safe timer timeout, or possibly the bus master timeout, and is usually due to a problem in an applications software program.

Corrective steps:

- Try another copy of the program or have the customer contact the software manufacturer or dealer to report this problem.

- If this message is generated during the power-up sequence it could indicate a timer chip problem. Turn the computer off, wait for 15 seconds, then turn the computer back on. If the message appears again, replace the system board.

ERROR: System control processor failure!

The system control processor failed the power-up self-test. This message may also appear if the computer is turned off, then on again quickly.

Corrective steps:

- Turn the computer off, wait for 15 seconds, then turn it back on. If the message reappears, replace the system board.

ERROR: Timer interrupt failure!

The interrupt controller or timing logic failed the power-up self-test. This message may also appear if the computer is turned off, then on again quickly.

Corrective steps:

- Turn the computer off, wait for 15 seconds, and turn it back on. If the message reappears, replace the system board.

ERROR: Wild hardware interrupt!

An unexpected error or memory failure occurred while running a program.

Corrective steps:

- Turn the computer off, wait 15 seconds, and turn it back on. Rerun the program.
- If the message occurs at the same place during the operation of a program, it may be software related. Have the customer contact the software manufacturer or dealer and report the problem.
- If the message occurs randomly, use the disk-based diagnostics program to test the computer. Replace any faulty assemblies.

ERROR: Wild Interrupt!

An unexpected error or memory failure occurred while running a program.

Corrective steps:

- Turn the computer off, wait 15 seconds, and turn it back on. Rerun the program.
- If the message occurs at the same place during the operation of a program, it may be software related. Have the customer contact the software manufacturer or dealer and report the problem.
- If the message occurs randomly, use the disk-based diagnostic tests to test the computer. Replace any faulty assemblies.

Fatal Error: Cannot Continue!

This message only appears immediately following another error message. The first message indicates what error halted operation.

Corrective steps:

- Refer to the first error message and follow the instructions to resolve that problem.

Non-system disk

The computer attempted to boot from a formatted disk or partition without an operating system.

Corrective steps:

- Make certain a valid drive is selected for the boot operation.
- Install the operating system. Refer to the operating system documentation for instructions.
- Reboot.

Non-maskable interrupt received!

This message warns of an impending power failure. Either the AC power supply has failed (blown fuse or circuit breaker), or the supply has dropped below acceptable operating levels (brownout). The message also appears if a software program issues an undefined interrupt. Certain machine language commands entered from the Monitor program can also cause this error.

Corrective steps:

- Turn the computer off. If the power supply is at fault, replace it. If the AC supply is at fault, do not restore power to the computer until the problem is resolved.
- If a software problem is suspected, have the customer contact the software manufacturer for assistance.

No bootable partitions

The hard disk drive does not know which partition to boot from. There is no default boot partition specified or when using the BW command at the Monitor prompt, the partition was not specified.

Corrective steps:

- Make certain a valid partition is selected to boot from.
- Reboot.

Not a bootable partition

The computer attempted to boot from a correctly specified partition on the hard disk drive that is not a bootable partition.

Corrective steps:

- Install the operating system on the partition.
- Reboot.

Overflow!

This message appears if a power-up self-test failed or if the computer is turned off, then back on very quickly. This problem can also be software related. It also may occur when a software program attempts an invalid operation.

Corrective steps:

- Reboot the computer and run the application again.
- Try another copy of the program or have the customer contact the software manufacturer or dealer to report the problem.
- Unless this message occurs during the power-up sequence, the problem is probably software-related. Turn the computer off, wait for 15 seconds, and turn it back on. If the message reappears, replace the system board.

Chapter 4

Disassembly and Options

This chapter provides procedures for disassembly and installation of various hardware options for the Z-486/25E EISA (Extended Industry Standard Architecture) computer.

Notice: Before adding hardware options to this computer, read the following section on managing power supply capacity.

Managing Power Supply Capacity

The power supply in this computer provides 17 amps of current at +5 volts DC.

The basic system uses approximately 11 amps, leaving 6 amps for additional disk drives or option cards. When adding drives or cards to the system, be sure the total current requirement of all options is no more than 17 amps. Attempting to use more current than is available may reduce system reliability and cause the computer to function improperly. Some typical current requirements are:

- 5.25-inch half height hard disk drive: .7 amps
- 5.25-inch full height hard disk drive: 2 amps
- 3.5-inch floppy disk drive: .2 amps
- 5.25-inch floppy disk drive: .5 amps
- tape back-up drive: .7 amps
- average EISA option card: 2.3 amps
- average ISA option card: 2 amps.

Check with the manufacturer of the specific option to be added for the exact current requirement of that option.

Static Precautions

To protect ICs and circuit boards:

- Do not remove any static sensitive device from its protective packaging until you are ready to install it.
- Equalize the static electricity between the work surface, the device, and yourself by touching the work surface with one hand and then picking up the device with the other hand.
- Once you have removed the device from its protective packaging, do not set it down until it is installed in the computer or returned to its protective packaging.

Cover Removal/ Installation

Warning: To prevent shock, disconnect the computer from the AC power source before removing the cover.

To remove the computer cover:

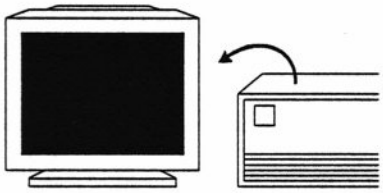

A. Disconnect and set the video monitor aside.

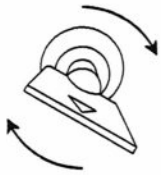

B. Unlock the computer cover.

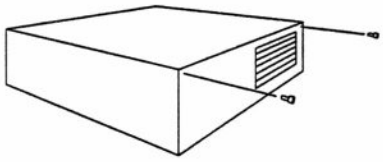

C. Remove the thumbscrews from the rear of the computer.

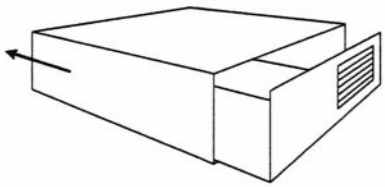

D. Slide the cover toward the front of the computer and lift it up and off. Make sure the cover does not bind on internal cables or connectors.

To re-install the cover, reverse the process of the above steps.

Circuit Card Removal/Installation

Notice: Use static precautions.

To remove a circuit card:

1. Remove the cover as described earlier.
2. Remove any cables attached to the card. Note their location and orientation so they can be properly reattached later.
3. Refer to Figure 4-1 and remove the screw that secures the circuit card to the computer chassis. Save the screw. Grasp the card and pull it free of the connector.

Figure 4-1. *Circuit Card Removal/Installation*

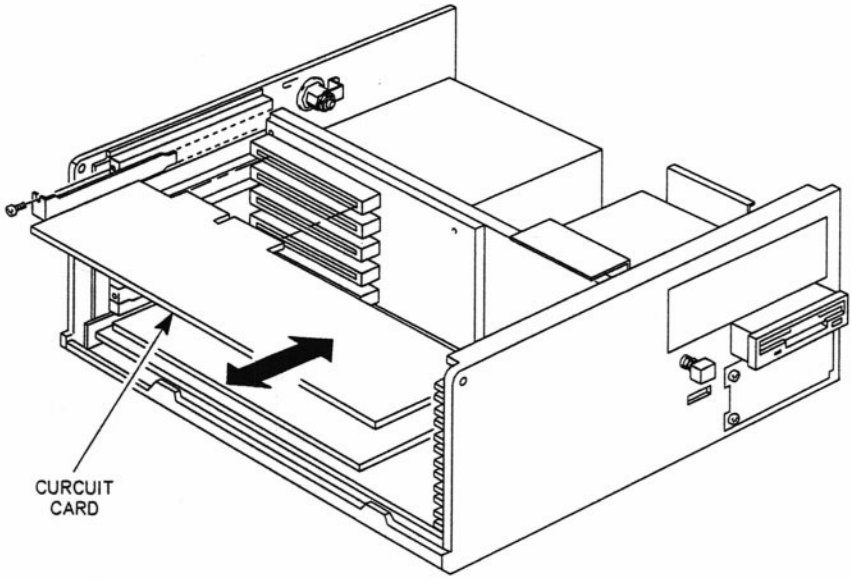

4. Place the card in protective packaging.

To install a circuit card in the computer:

1. Refer to Table 4-1 and select the expansion slot for the new card.

Table 4-1. *Expansion Slot Assignments*

CONNECTOR	BUS	CARD
P300	EISA	Open
P301	EISA	Open
P302	EISA	Open
P303	EISA	Video Card
P304	EISA	IDE/Floppy Disk/SCSI Controller Card

2. Before installing the new card(s), run the ECU program to reconfigure the computer. Refer to the owner's manual for further information on the ECU. After running the ECU, turn off and unplug the computer.

3. Remove the cover as described earlier.

4. Remove and save the screw and blank cover plate from the computer chassis at the slot location to be used. Refer to Figure 4-2.

Figure 4-2. *Blank Panel Removal*

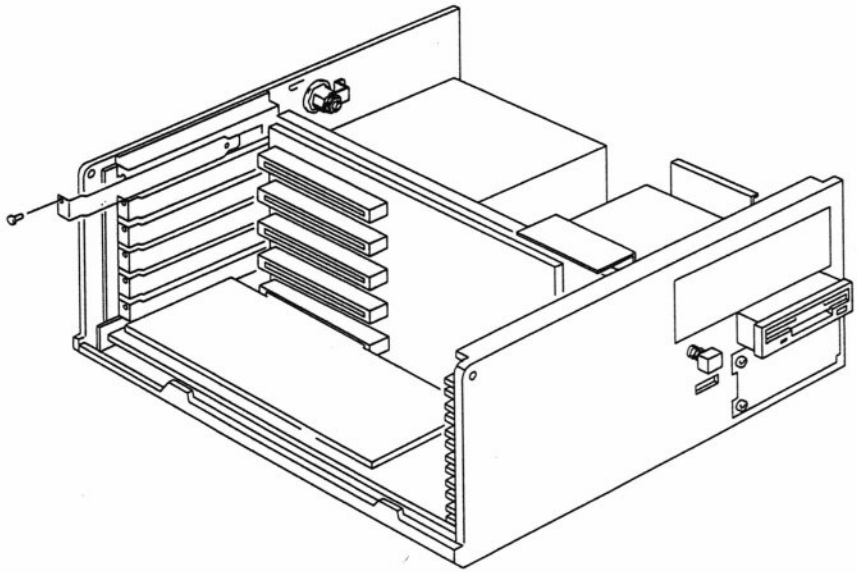

5. Refer to Figure 4-1 and position the new card over the slot. Seat the card by pushing carefully until it slides into place. Secure the card with the screw removed in step 4.

6 Refer to circuit card documentation and attach any peripheral cables.

7. Replace the cover.

Backplane Card Removal/Installation

Notice: Use static precautions.

To remove the backplane card:

1. Remove the cover as described earlier.
2. Remove any circuit cards installed in the computer using the procedure outlined in the previous section.
3. Remove the two screws securing the backplane card to the chassis. Refer to Figure 4-3.

Figure 4-3. *Backplane Card Removal*

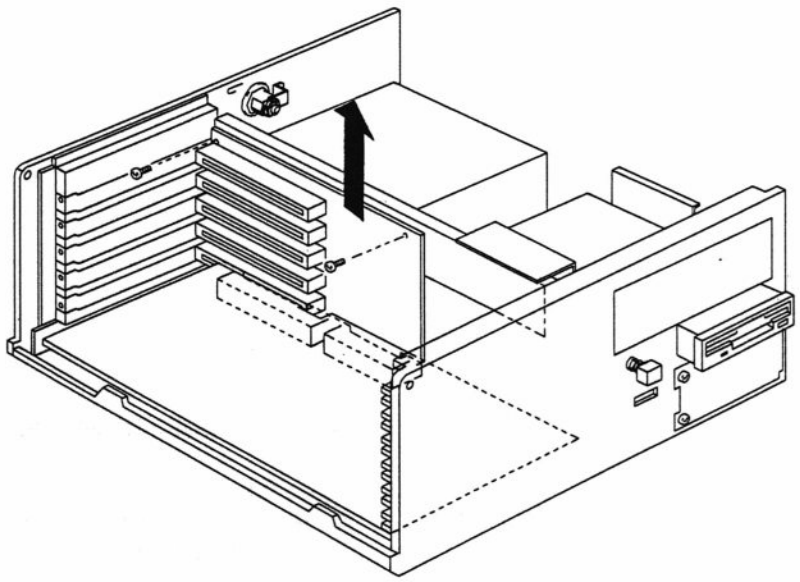

4. Unplug and lift the backplane card out of the socket on the system board.
5. To install a new backplane card, reverse the process in the above steps.

4167 Coprocessor Installation

NOTICE: Use static precautions.

To install an optional 4167 coprocessor:

1. Remove the cover as described earlier.
2. If a disk drive is installed in the top slot of the computer, it may have to be removed before installing the coprocessor. Refer to instructions later in this chapter for removal of the type of drive that is installed in the slot.
3. Use Figure 4-4 to locate the numeric coprocessor socket.

Figure 4-4. *Numeric Coprocessor Installation*

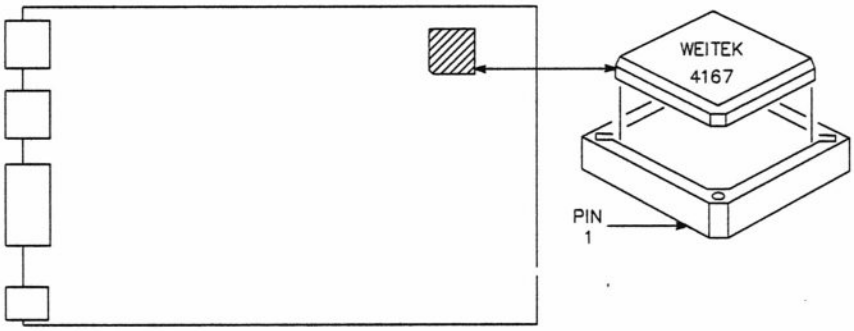

4. Insert the IC into the socket as shown in Figure 4-4.
5. Align the notched corner of the coprocessor chip (the notched corner of the chip is also marked with an index dot) with the pin 1 corner of the socket. The pin 1 corner of the socket is also notched.
6. Reinstall any drive which may have been removed earlier.
7. Replace the cover.
8. The coprocessor is automatically made available to the system when the computer is turned on and booted, so no configuration is necessary.

OEM ROM Installation

Notice: Use static precautions.

To install an OEM ROM:

1. Remove the computer cover as described earlier.
2. Locate the OEM ROM socket at location U114 on the system board. Refer to Figure 4-5.

Figure 4-5. *OEM ROM Installation*

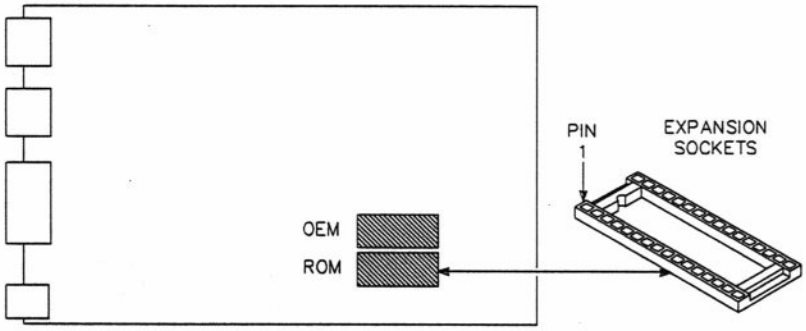

3. Remove any expansion cards or that may make access difficult.
4. Carefully insert the IC into the socket by aligning pin one of the IC with pin one of the socket. Refer to Figure 4-5.
5. Replace the cover.

System Memory Card Removal/ Installation

Notice: Use static precautions.

To remove the system memory card:

1. Remove the cover.
2. Remove the two screws securing the system memory card to the chassis. Refer to Figure 4-6.

Figure 4-6. *System Memory Card Removal/Installation*

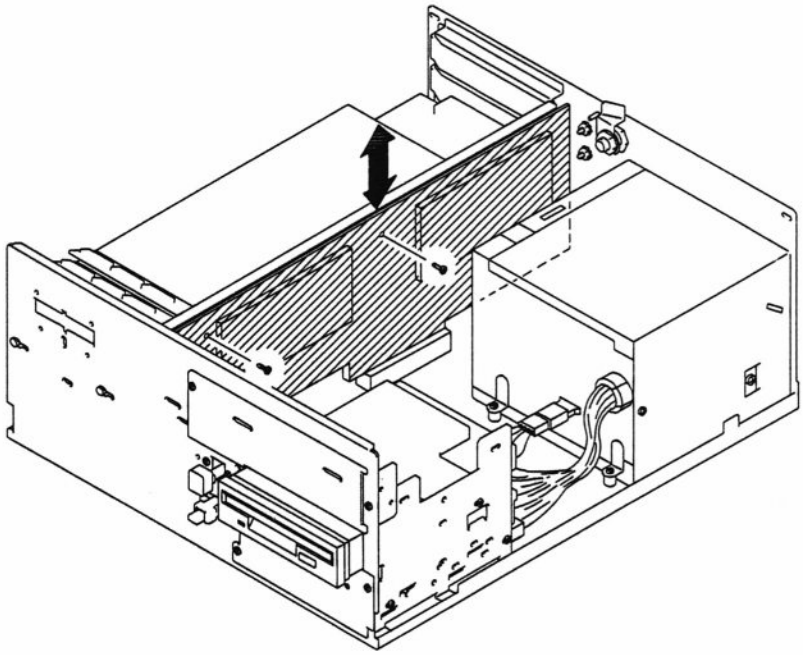

3. Lift the system memory card out of its socket on the system board.
4. To install a new system memory card, reverse the process in the above steps.

SIMM Installation/ Removal

Note: Before adding or removing memory, run the ECU program to reconfigure the computer. Refer to the owner's manual for information on the ECU. For maximum performance, install SIMMs in similar pairs to allow 64-bit wide memory operation. Pairs may be installed in any order. For example, a pair of 1M SIMMs may be followed by a pair of 4M SIMMs. Turn off and unplug the computer.

Notice: Use static precautions.

To install SIMMs (Single In-Line Memory Modules):

1. Remove the cover as described earlier.

2. Locate the system memory card and remove it using the procedure outlined earlier.

3. Refer to Figure 4-7 and install each SIMM by putting it in the proper socket, gently pushing it down until it is all the way down in the socket, and pushing the module into the upright position until it snaps into place. A distinctive click will be heard as the latches engage the SIMM.

Figure 4-7. *SIMM Installation/Removal*

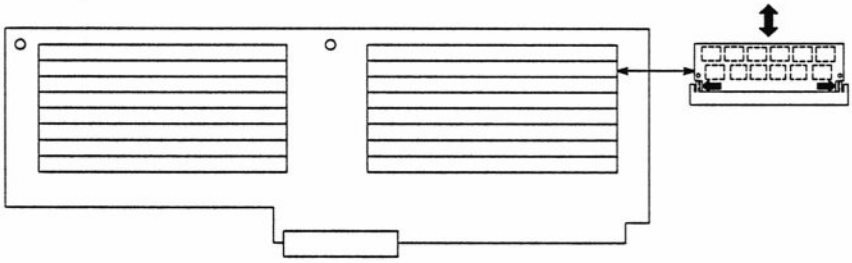

4. Reinstall the system memory card by reversing the process in the above steps.

5. Replace the cover.

6. Perform the ROM-based memory tests described in "User's Tests" in Chapter 2 of this manual to verify that all memory banks are functioning properly.

7. Run the disk-based memory diagnostic tests to thoroughly check the new memory. Refer to the disk-based diagnostics documentation for testing instructions.

To remove a SIMM:

1. Remove the cover.
2. Remove the system memory card using the procedure outlined above.
3. Remove the appropriate SIMM(s) by carefully using a flat-bladed screwdriver to push the latches on each end of the SIMM socket outward until the SIMM releases. Refer to Figure 4-7.
4. Gently tip the module and lift it out.
5. Reinstall the system memory card by reversing the system memory removal instructions above.
6. Replace the cover.
7. Perform the ROM-based memory tests described in "User's Tests" in Chapter 2 of this manual to verify that all memory banks are functioning properly.
8. Run the disk-based memory diagnostic tests to thoroughly check the new memory configuration. Refer to the documentation packed with the disk-based diagnostics for further instructions.

Disk Drive Installation

Notice: Consult the owner's manual to reconfigure the computer using the ECU configuration program when adding or removing drives. Run the ECU program to reconfigure the computer before installing the new disk drive(s). Then turn off and unplug the computer.

Use static precautions.

Optional drives are installed in the top drive slot. Use the following procedure to install optional drives:

1. Remove the cover as described earlier.

2. Refer to Figure 4-8 and remove the panel covering the disk drive slot on the chassis.

Figure 4-8. *Drive Support Bracket Removal*

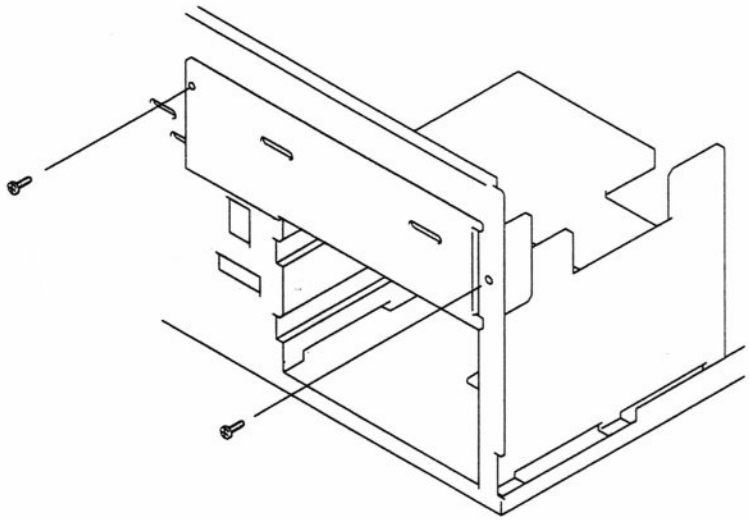

3. Reposition the panel as shown in Figure 4-9 and reattach it to the chassis with the screws removed in the previous step.

Figure 4-9. *Drive Support Bracket Installation*

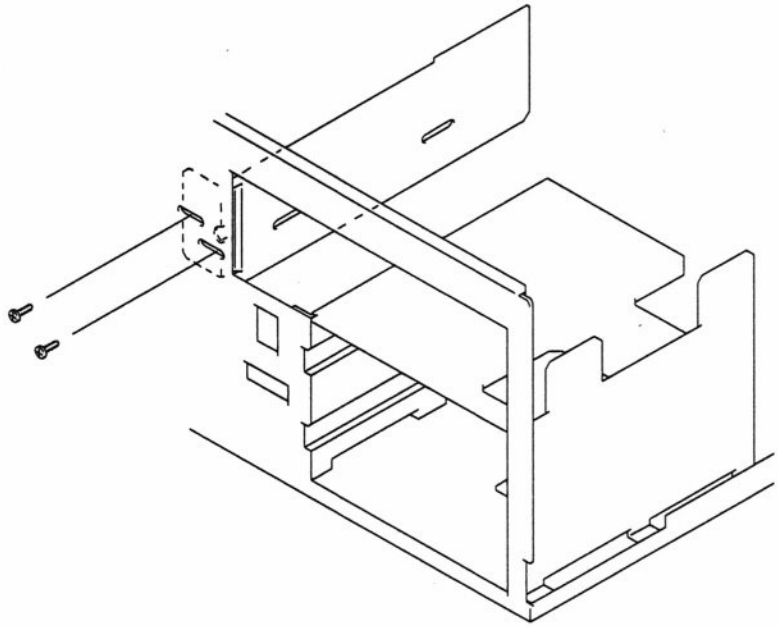

4. Proceed by following the instructions for the particular drive type being installed. These instructions are listed on the following pages.

Optional 3.5-Inch Floppy Disk Drive Installation

This computer supports two types of 3.5-inch floppy disk drives:

- 3.5-inch, 1.4M high-density drive
- 3.5-inch, 720K double-density drive.

To install either drive:

1. Unpack the 3.5-inch floppy disk drive.
2. Set the configuration jumpers, switches, or termination resistors using the document supplied with the drive. In this computer each drive-select designation must represent the second logical drive (DS1 with drives supplied by Zenith Data Systems). Other drive manufacturers may use DS0 or DS1 as the second logical drive designation. Check their documentation.
3. Refer to Figure 4-10 and place the disk drive upside down on a level work surface.

Figure 4-10. *Adapter Bracket Installation*

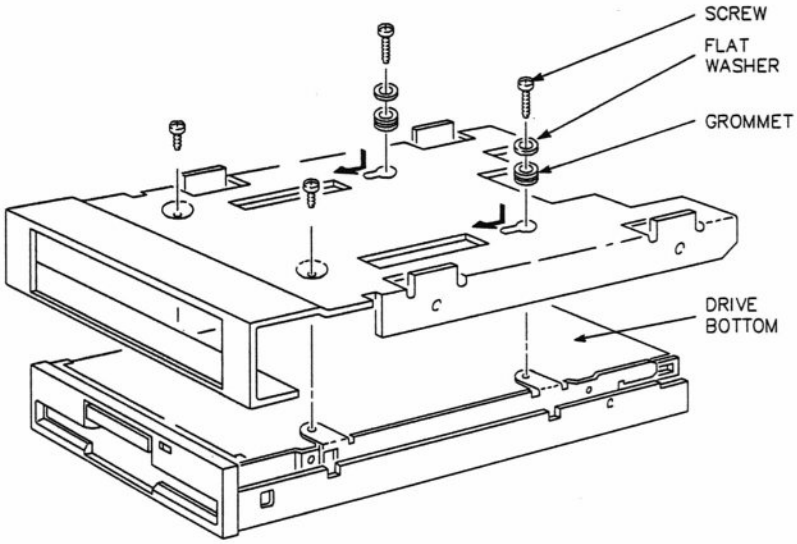

4. Turn the disk drive adapter bracket upside down and insert the two rubber grommets into the two key holes and slide them into place.

5. Place the adapter bracket over the drive as shown in Figure 4-10. Line up the screw holes in the bracket with the corresponding holes in the bottom of the drive.

6. Secure the disk drive to the adapter bracket as follows:

   - Start the two longest screws through the two flat washers, two grommets, and rear holes of the bracket into the disk drive. Do not tighten these screws at this time.

   - Start the two screws through the front holes of the bracket into the disk drive.

   - Tighten all four screws.

7. Proceed to "Mounting Disk Drives" later in this section.

Optional 5.25-Inch Floppy Disk Drive Installation

This computer supports the following types of 5.25-inch floppy disk drives:

- 5.25-inch, half-height 1.2M high-density drive

- 5.25-inch, half-height 360K double-density drive.

To install either type:

1. Carefully unpack the 5.25-inch floppy disk drive.

2. Set the configuration jumpers, switches, or termination resistors using the document supplied with the drive. In this computer each drive-select designation must represent the second logical drive (DS1 with drives supplied by Zenith Data Systems). Other drive manufacturers may use DS0 or DS1 as the second logical drive designation. Check their documentation.

3. Proceed to "Mounting Disk Drives" later in this section.

Optional SCSI Tape Backup Unit Installation

The computer supports a 5.25-inch SCSI (Small Computer System Interface) magnetic tape backup unit. Set the configuration jumpers, switches, or termination resistors using the document supplied with the drive. In this computer each drive-select designation must represent the second logical drive (DS1 with drives supplied by Zenith Data Systems). Other drive manufacturers may use DS0 or DS1 as the second logical drive designation. Check their documentation.

1. Slide the eject button to the left and remove the cardboard shipping insert from the unit (refer to Figure 4-11).

Figure 4-11. *SCSI Unit Shipping Insert Removal*

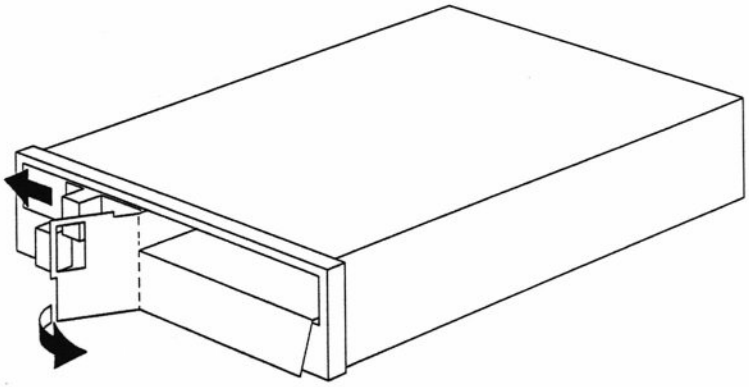

2. Proceed to "Mounting Disk Drives."

Replacing the Standard 3.5-inch Hard Disk Drive

To replace the factory installed 3.5-inch hard disk drive:

1. Remove the cover.
2. Unplug the power cable and ribbon cable from the hard disk drive.
3. Remove the hard disk drive front cover plate (refer to Figure 4-12).

Figure 4-12. *Hard Drive Cover Plate Removal*

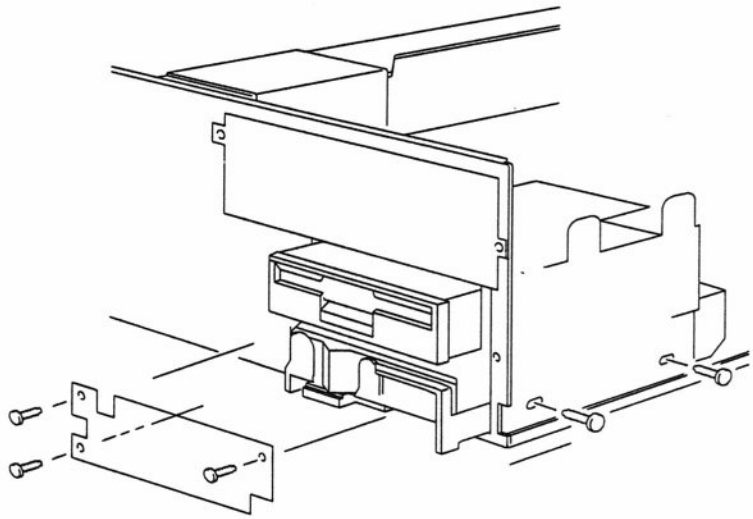

4. Remove the two screws securing the hard drive to the chassis (refer to Figure 4-13).

Figure 4-13. *Hard Drive Screw Removal*

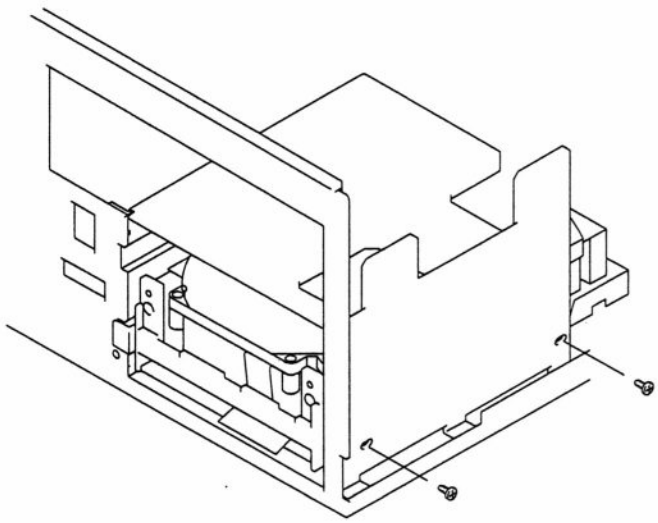

5. Slide the drive out of the front of the computer.

6. Remove the slide bracket from the hard disk drive and reattach it using the same two screws to the new drive. Refer to Figure 4-14.

Figure 4-14. *Hard Drive Slide Bracket Removal/Installation*

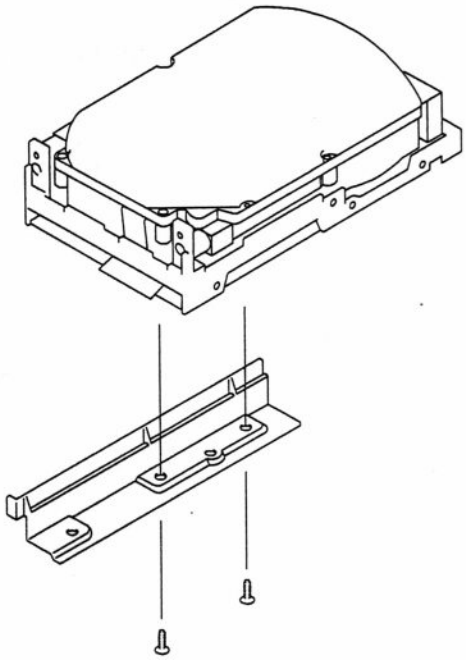

6. Set the configuration jumpers, switches, or termination resistors using the document supplied with the new drive. In this computer each drive-select designation must represent the second logical drive (DS1 with drives supplied by Zenith Data Systems). Other drive manufacturers may use DS0 or DS1 as the second logical drive designation. Check their documentation.

5. To install the new drive, reverse the process in the above steps.

6. Replace the cover.

Replacing the Standard 3.5-inch Floppy Disk Drive

To replace the factory installed 3.5-inch floppy disk drive:

1. Remove the cover.
2. Unplug the power cable and ribbon cable from the floppy drive.
3. Remove the two screws securing the support bracket and floppy drive to the drive housing. Refer to Figure 4-15. Remove the support bracket.

Figure 4-15. *Floppy Drive Screw Removal*

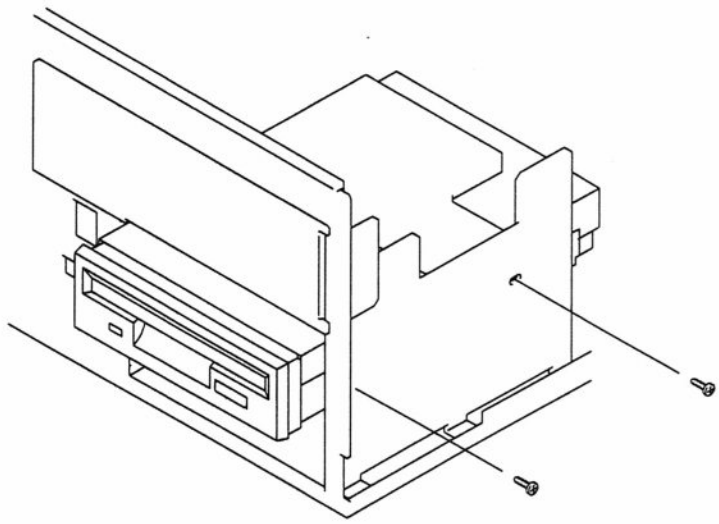

4. Slide the floppy drive out of the front of the drive housing.

5. Remove the slide bracket from the floppy drive and reinstall it on the new drive as shown in Figure 4-16.

Figure 4-16. *Floppy Drive Bracket Removal/Installation*

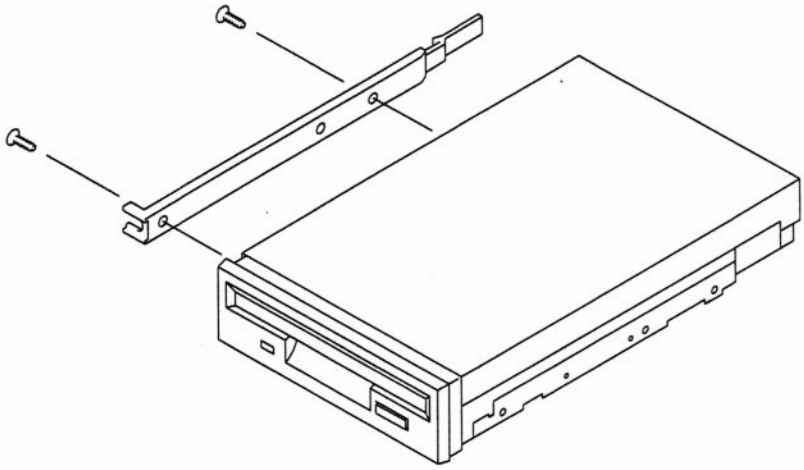

5. Set the configuration jumpers, switches, or termination resistors using the document supplied with the new drive. In this computer each drive-select designation must represent the second logical drive (DS1 with drives supplied by Zenith Data Systems). Other drive manufacturers may use DS0 or DS1 as the second logical drive designation. Check their documentation.

6. Install the new drive by reversing the process in the above steps.

Mounting Disk Drives

1. Secure the drive to the chassis using the four screws packed with the drive. Refer to Figure 4-17. 3.5-inch drives require the adapter bracket as described earlier. Use the four screws to mount the adapter bracket to the drive chassis or to mount the drive directly in the slot if no adapter is needed.

Figure 4-17. *Disk Drive Installation*

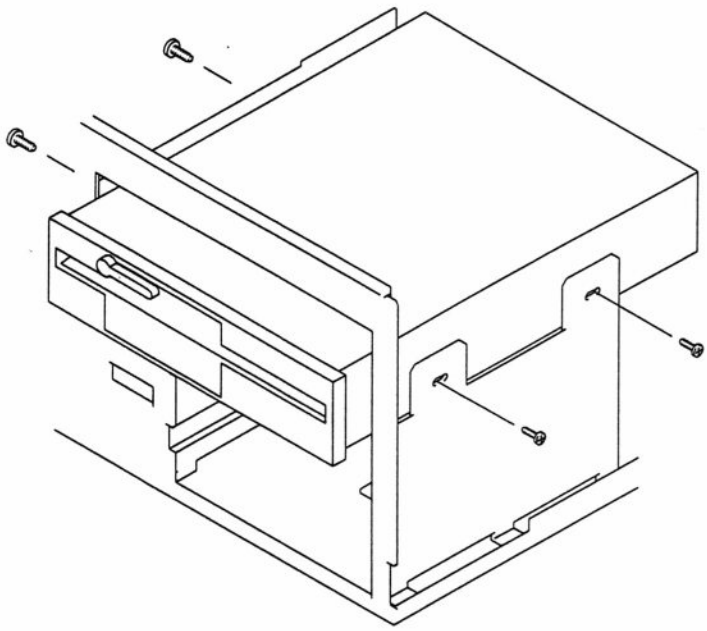

2. Connect the power cable to the drive. Connect the appropriate cables to the back of the disk drive and to the controller card, being sure to match the stripe on the cables to the pin 1 location on the drives and the card (pin 1 is normally marked by a number 1 or an arrow). It is important that the cable with the twist be connected to the first drive. Refer to Figure 4-18.

Figure 4-18. *Disk Drive Cable Connections*

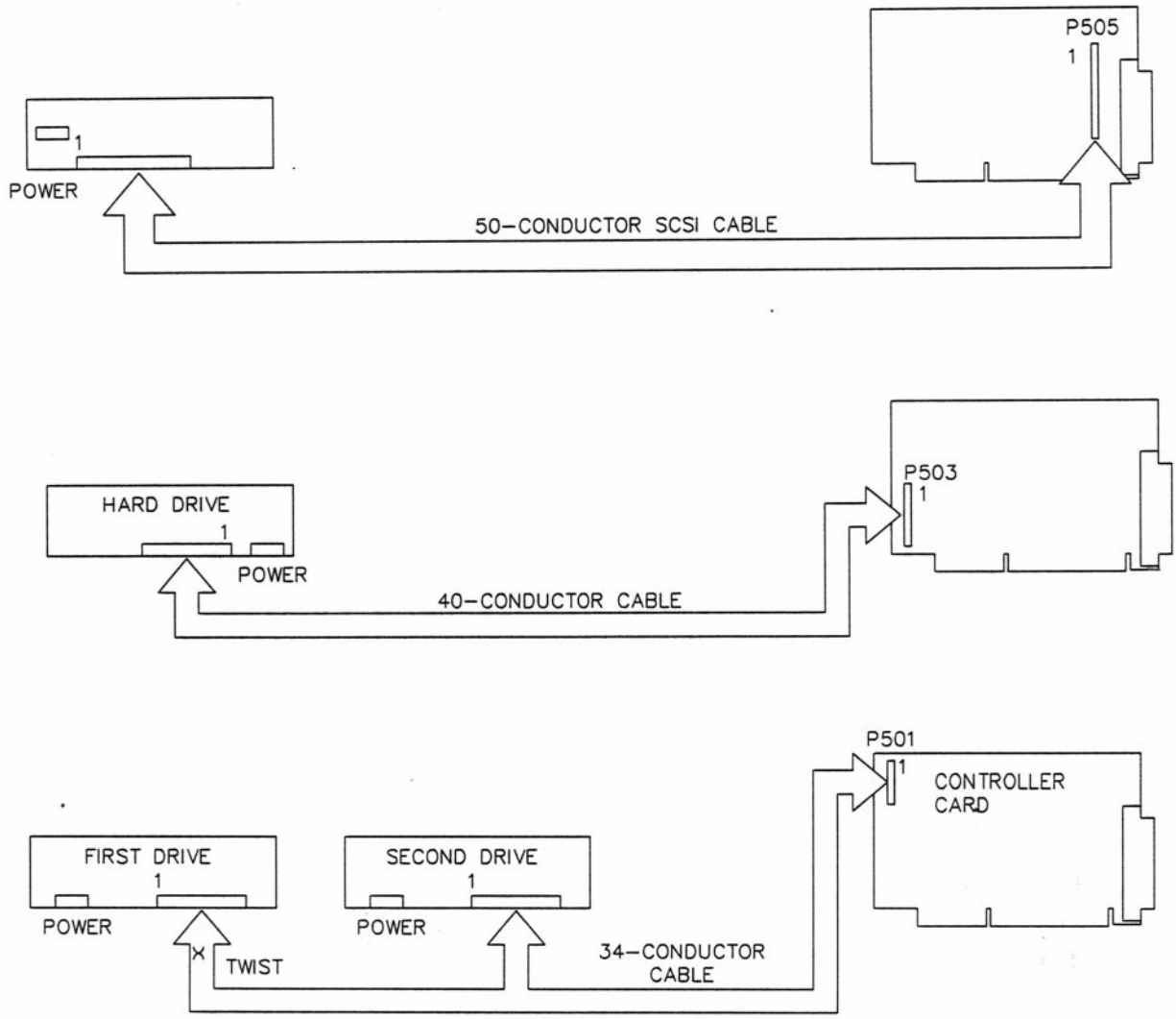

Notice: When installing a 3.5-inch drive, a cable adapter may be needed for attaching the ribbon cable to the drive. Refer to Figure 4-19.

Figure 4-19. *3.5-inch Ribbon Cable Adapter*

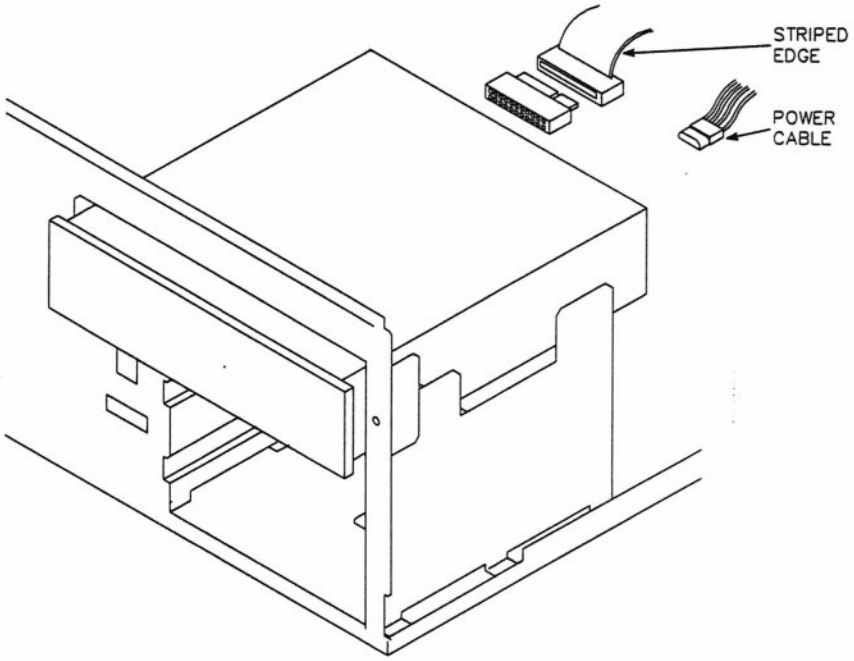

Blank Panel Removal

If you installed a drive that extends beyond the main chassis, the blank front panel must be removed as follows:

1. Refer to Figure 4-20 and remove the indicated screw securing the blank panel to the front panel.

Figure 4-20. *Blank Panel Removal*

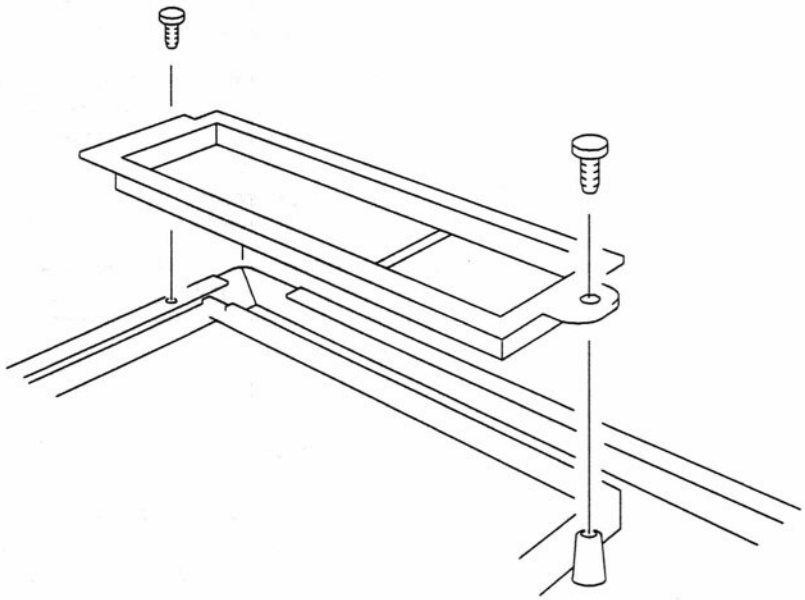

2. Loosen (do not remove) the other screw and remove the blank panel.
3. Tighten the screw loosened above.
4. Install cover by performing the cover removal steps outlined earlier in reverse order.
5. Reconnect monitor and peripherals.

Real-Time Clock IC Replacement

Notice: This procedure deletes all configuration information stored in the CMOS RAM. Note the current setup data before removing the Real-time Clock IC (RTC) to allow re-entry of the correct data after reassembly using the ECU software utility program.

The RTC contains a lithium battery for backing up setup/configuration information stored in the CMOS RAM inside the RTC IC. Replace the RTC IC and dispose of it properly.

Caution: The Real-time Clock IC contains a lithium battery. It is safety sealed and should not be opened. To prevent explosion hazards, avoid shorting the battery. Do not attempt to recharge it. Use the disposal procedure described later in this section.

Notice: Use static precautions.

To replace the RTC:

1. Remove the cover as described earlier.
2. Remove any expansion cards as necessary to gain easy access to the RTC chip on the system board. The RTC is located at location U103 on the system board as shown in Fig 4-21.

Figure 4-21. *Real-Time Clock Location*

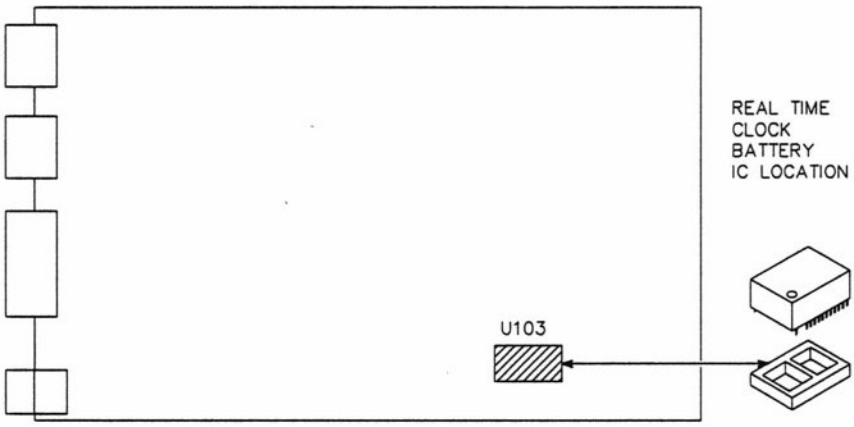

3. Carefully remove the RTC by using a small flat bladed screwdriver to pry it out of its socket.

4. Insert the new RTC being careful to align the dot on its package with the socket properly as shown in Figure 4-22.

Figure 4-22. *Real-time Clock Replacement*

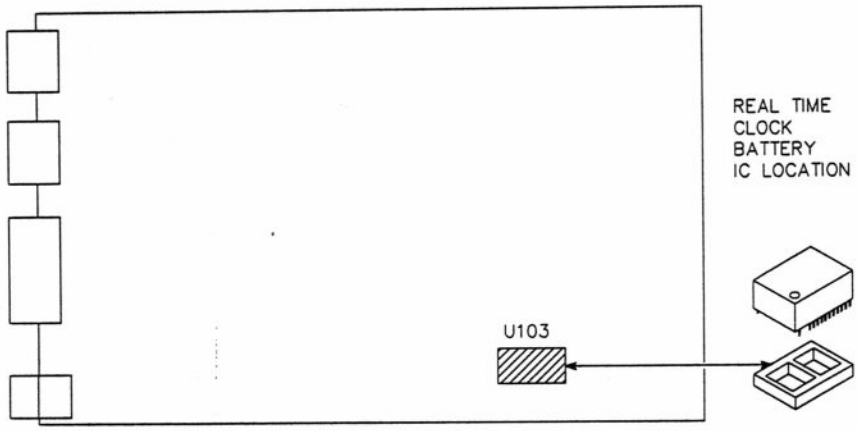

5. Replace the cover.

6. When the system is powered up an error message may appear indicating a CMOS problem. This is normal. Run the ECU configuration software to reconfigure the system.

Real-Time Clock IC Disposal

Caution: The Real-time Clock IC contains a lithium battery. It is safety sealed and should not be opened. To prevent explosion hazards, avoid shorting the battery. Do not attempt to recharge it.

Proper disposal of the RTC:

1. Clip all exposed IC leads. Do not short any leads together!

2. Wrap the IC in insulating tape to prevent accidental shorting.

3. Pack the IC so it cannot be crushed.

4. Dispose of the IC in the trash.

Card Guide Removal/ Installation

Notice: Use static precautions.

To remove the card guide:

1. Remove the cover as described earlier.
2. Remove any expansion circuit cards in the computer following circuit card removal instructions outlined earlier.
3. Use a flat bladed screwdriver and push the center tab in while sliding the card guide toward the side of the computer chassis. Refer to Figure 4-23. Remove the card guide.

Figure 4-23. *Card Guide Removal*

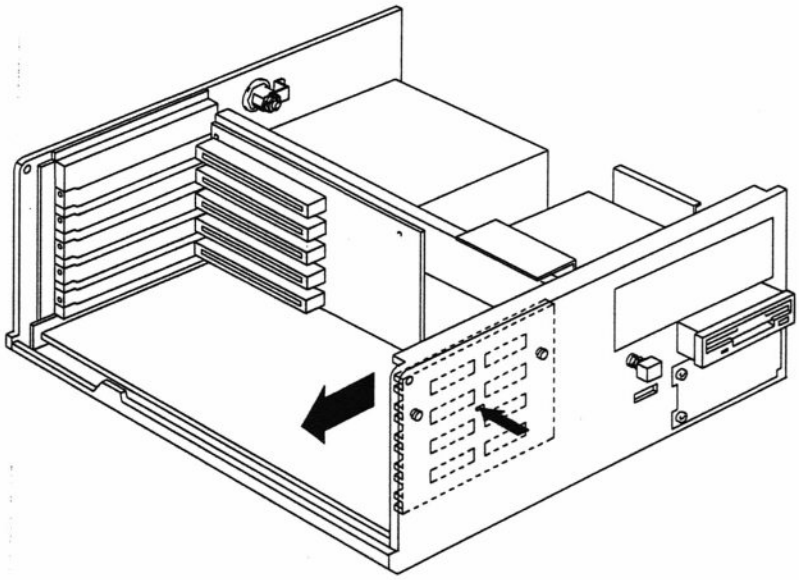

4. Replace the card guide by reversing the above steps.
5. Replace previously removed circuit cards.
6. Replace the cover.

Keylock Removal/ Installation

To remove the keylock assembly (Refer to Figure 4-24):

1. Remove the cover as described earlier.
2. Remove the nut, tooth lockwasher, and bracket from the lock assembly.
3. Use a flat object such as a screwdriver to remove the retainer clip from the keylock assembly.

Figure 4-24. *Keylock Assembly Removal*

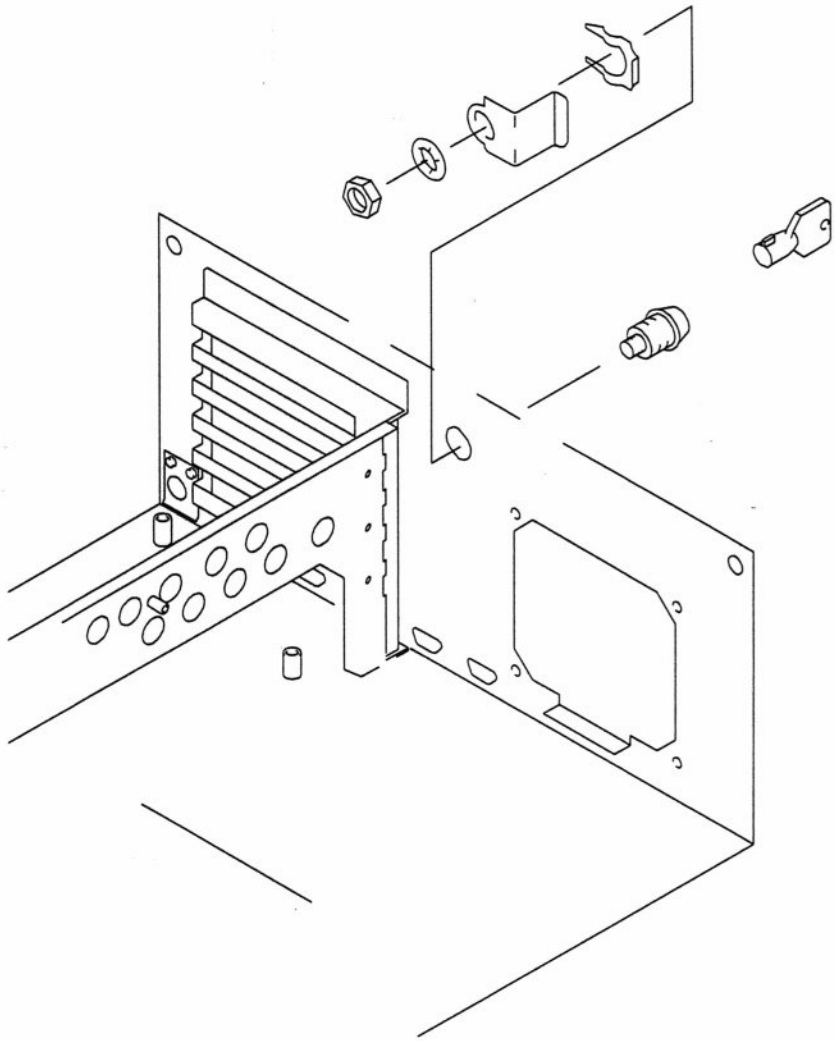

4. Remove the keylock assembly from the chassis.
5. Install the new lock assembly by reversing the process in the above steps.
6. Replace the cover.

Power Switch Replacement

To replace the power switch:

1. Remove the cover as described ealier.
2. If a disk drive is installed in the top slot, the drive must be removed to allow removal of the power switch assembly. Refer to earlier instructions for disk drive removal.
3. There are two cables coming from the power switch assembly. One runs to the power supply while the other runs to the system board. Unplug both.
4. Remove the on/off switch plastic cap by pulling it straight out. Refer to Figure 4-25.

Figure 4-25. *Power Switch Replacement*

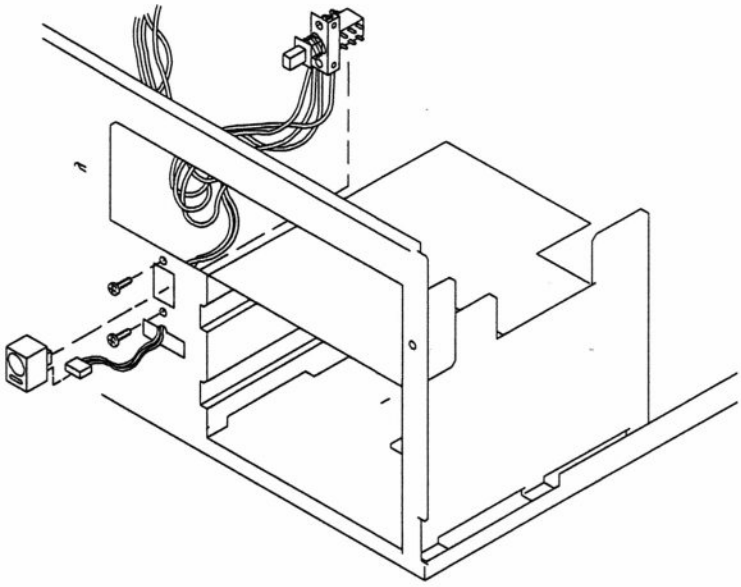

5. Remove the power indicator LED assembly from the plastic cap.
6. Remove the disk drive LED indicator assembly by pushing it in and to one side.
7. Push the power switch LED assembly through the hole.
8. Remove the two screws securing the switch assembly to the chassis front. Remove the switch assembly.
9. To install the new switch assembly, reverse the process in the above steps.
10. Replace the disk drive if removed in step 2.
11. Replace the cover.

Hard Disk Drive Access LED Replacement

To replace the drive access LED assembly:

1. Remove the cover as described earlier.
2. If a disk drive is installed in the top drive slot, remove the drive to allow removal of the drive access LED assembly. Refer to earlier instructions for disk drive removal.
3. Remove the hard disk drive access LED indicator assembly by pushing it in and to one side. Refer to Figure 4-26.
4. Unplug the LED cable from the disk drive controller card.

Figure 4-26. *Hard Disk Drive Access LED Assembly Removal*

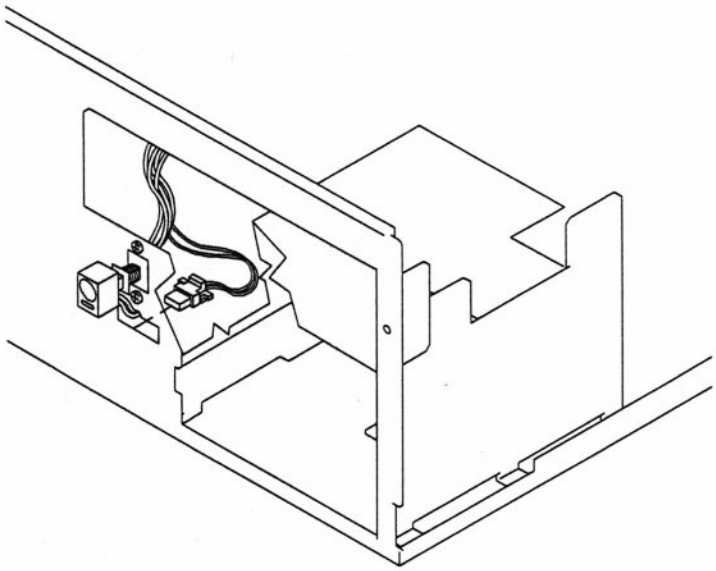

5. To install a new LED assembly, simply reverse the process in the above steps.
6. Replace the disk drive if removed in step 2.
7. Replace the cover.

System Board Removal/ Installation

Notice: Use static precautions.

1. Remove the cover as described earlier.
2. Remove all circuit cards as described earlier.
3. Disconnect the power supply connector and the power switch cable from the system board.
4. Remove the backplane card as described earlier.
5. Remove the system memory card as described earlier.
6. Refer to Figure 4-27 and remove the screws that secure the system board to the chassis.

Figure 4-27. *System Board Removal*

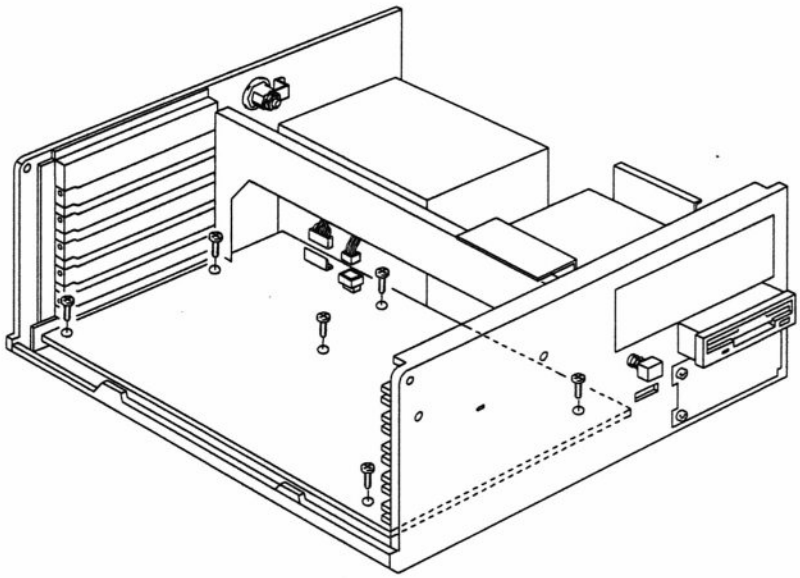

7. Use a 3/16-inch hex nutdriver to remove the hex threaded spacers from the two serial connectors and the parallel port connector on the rear panel of the computer.
8. Slide the system board toward the front of the computer and remove it through the side of the computer.
9. To install the new system board, reverse the process in the above steps.

Power Supply Removal/ Installation

Remove the power supply by following these steps. Refer to Figure 4-28:

Figure 4-28 Power Supply Removal

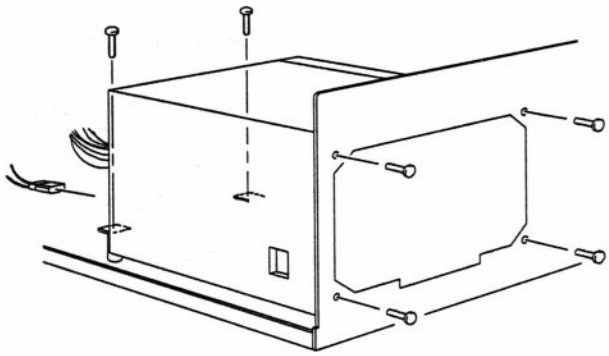

1. Remove the cover as described earlier.
2. Disconnect the power supply from the system board.
3. Disconnect power cables from the disk drives.
4. Disconnect the power switch cable from the power supply.
5. Remove the two screws that secure the power supply to the chassis bottom and the four screws securing the supply to the rear of the chassis.
6. Lift the power supply up and out of the chassis.
7. To install a new power supply, reverse the process in the above steps.

TIGA VGA Daughtercard Replacement

Some models of this computer are equipped with a TIGA video card with a VGA daughtercard installed on it. If VGA problems develop that require the VGA daughtercard to be replaced, follow these steps:

1. Remove the cover as described earlier.
2. Remove the TIGA video card from the backplane.
3. Place the TIGA card on a static-free work surface with the VGA daughtercard facing up.
4. Carefully unplug the VGA daughtercard from the TIGA card.

Figure 4-29. *VGA Daughtercard Replacement*

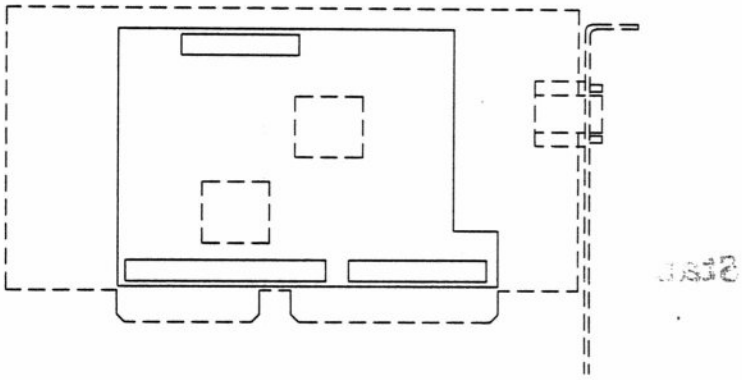

5. Remove the new VGA daughtercard from its protective packaging and carefully plug it onto the TIGA video card.
6. Reverse the process in the above steps to reinstall the TIGA video card in the computer.

Chapter 5

Hardware Configuration

This chapter describes jumper and switch settings for computer hardware. For information about connector pinouts refer to the "Specifications" section at the end of this manual. Due to the ECU configuration program (refer to the owner's manual), there are very few hardware configuration tasks necessary. Most configuration is accomplished in software using the ECU program. When hardware options are being installed or changed, it is necessary to run the ECU program first, before actually making the hardware changes.

Warning: To prevent shock, disconnect the computer from the AC power source before servicing.

Static Precautions

To prevent component damage from static discharges, use the following precautions:

- Do not remove any static-sensitive device from its protective packaging until it is ready to be installed.
- Equalize the static electricity between the work surface, the device, and yourself by touching the work surface with one hand and then picking up the device with the other hand.
- Once the device is removed from its protective packaging, do not set it down or let go of it until it is either installed in the computer or returned to its protective packaging.

Disk Controller Card (Part Number 240-7926-10)

The disk controller provided with the computer supports SCSI (Small Computer Systems Interface) peripherals such as hard disk drives, tape back-up units, etc., and IDE interface hard disk drives as well as floppy disk drives.

Note: The factory-supplied drive controller card does not support ST-506 types of hard disk drives. If an ST-506 type drive is to be used, the factory-supplied controller card must be replaced with an appropriate ST-506 controller card (and CFG file).

This card contains no jumpers or switches. All configuration is done through software using the ECU program. Refer to the owner's manual for ECU information.

High Performance VGA Card (Part Number 240-7940-10)

This card contains one jumper option. Figure 5-1 and Table 5-1 describe the jumper. The factory default setting is generally the best option for most computer systems.

Figure 5-1. *High-Performance VGA Card Jumper Locations*

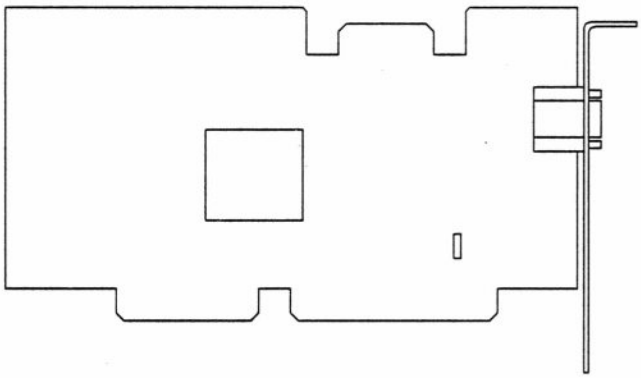

Table 5-1. *High-Performance VGA Card Jumper Description*

JUMPER	SETTING	DESCRIPTION
J1	ON	Enables IRQ2
	OFF[1]	Disables IRQ2

NOTE
1. Factory setting

Z-649 TIGA Video Card with VGA Daughtercard (Part Number 181-7891-10)

The Z-649 has no switches to configure and only two jumper blocks that require hardware configuration. Refer to Figure 5-2 for jumper locations and Table 5-2 for jumper descriptions. The factory configured jumper settings normally are the best options for most systems.

Figure 5-2. *TIGA Video Card Jumpers*

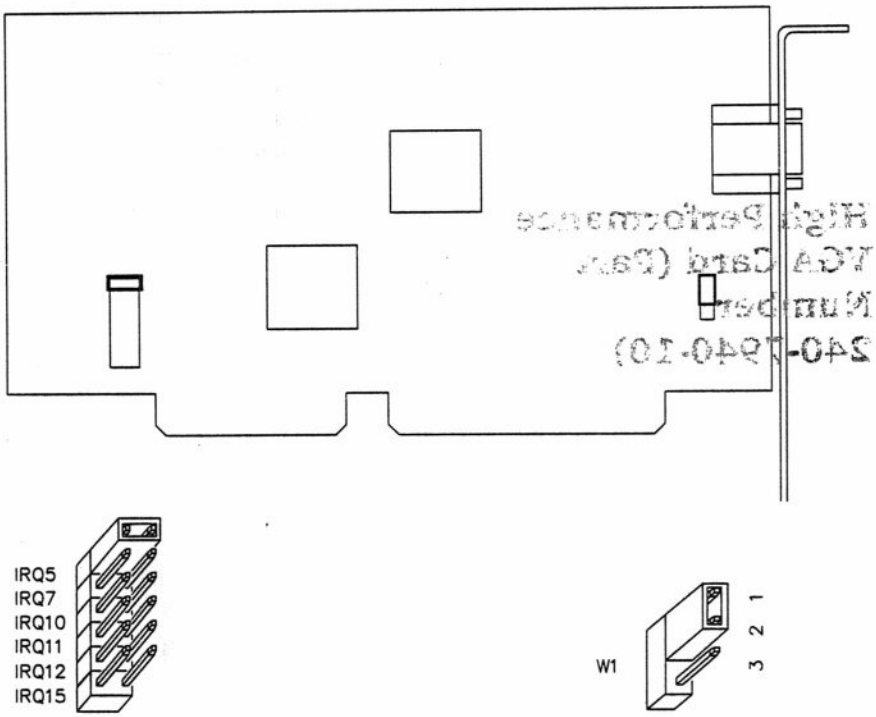

Table 5-2. *Z-649 TIGA Video Card Jumper Description*

JUMPER	SETTING	DESCRIPTION
IRQ5	1-2[1]	ON-Host Interrupt is IRQ5
IRQ7	1-2	Host Interrupt is IRQ7
IRQ10	1-2	Host Interrupt is IRQ10
IRQ11	1-2	Host Interrupt is IRQ11
IRQ12	1-2	Host Interrupt is IRQ12
IRQ15	1-2	Host Interrupt is IRQ15
W1	1-2[1]	Port Address is 290H-29FH
	2-3	Port Address is 280H-28FH

NOTE
1. Factory setting

Keyboard

The computer comes with a 101-key keyboard. The keyboard features auto-repeat, audible feedback, and software programmability.

Keyboard Configuration — The computer may have been shipped with one of two different keyboards. Both keyboards are configurable for XT- or AT-compatible operation. On some models a switch is located beneath the logo nameplate. Before plugging in the keyboard, use a small screwdriver to gently pry up the nameplate. The switch positions are labeled AT and XT. Position the switch in the AT position for use with this computer. Other models have the XT/AT switch located on the bottom of the keyboard (refer to Figure 5-3). Before connecting the keyboard to your computer, check the setting of this switch. The switch has the following three positions:

Figure 5-3. *Keyboard Configuration*

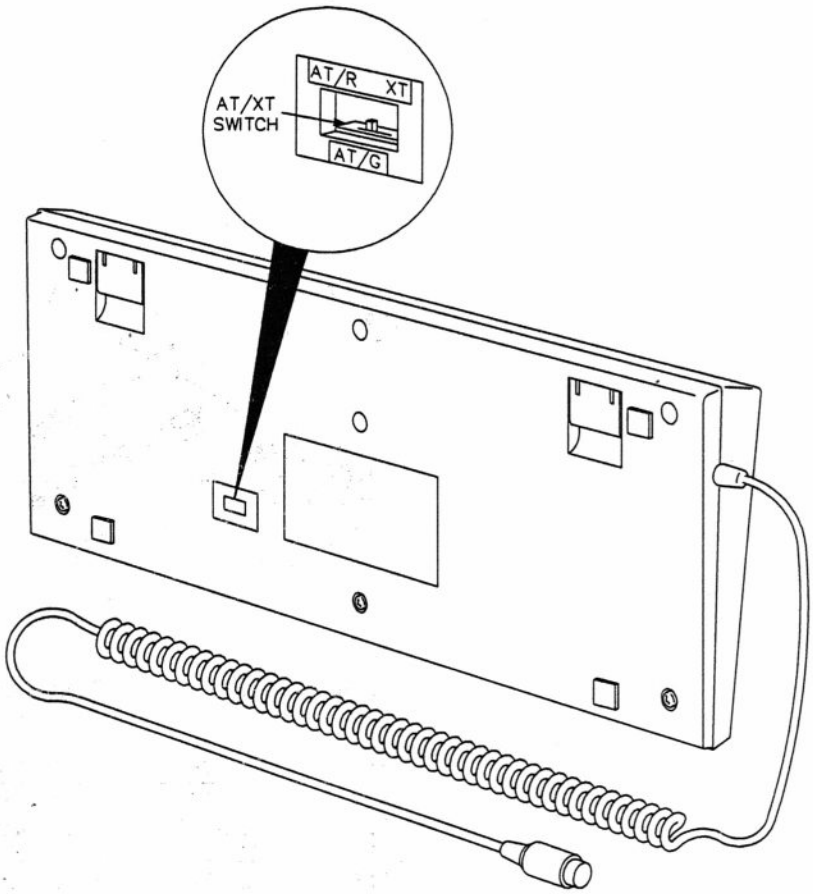

- AT/R — AT compatible (Red LEDs)
- AT/G — AT compatible (Green LEDs)
- XT — XT compatible.

The indicators are located on the Scroll Lock, Num Lock, and Caps Lock keys. For this computer set the switch in the AT/R for red LED indicators or in the AT/G for green LED indicators.

Chapter 6

Parts List

This chapter provides parts lists and exploded views of the base computer hardware.

Figure 6-1. *Cabinet and External Parts*

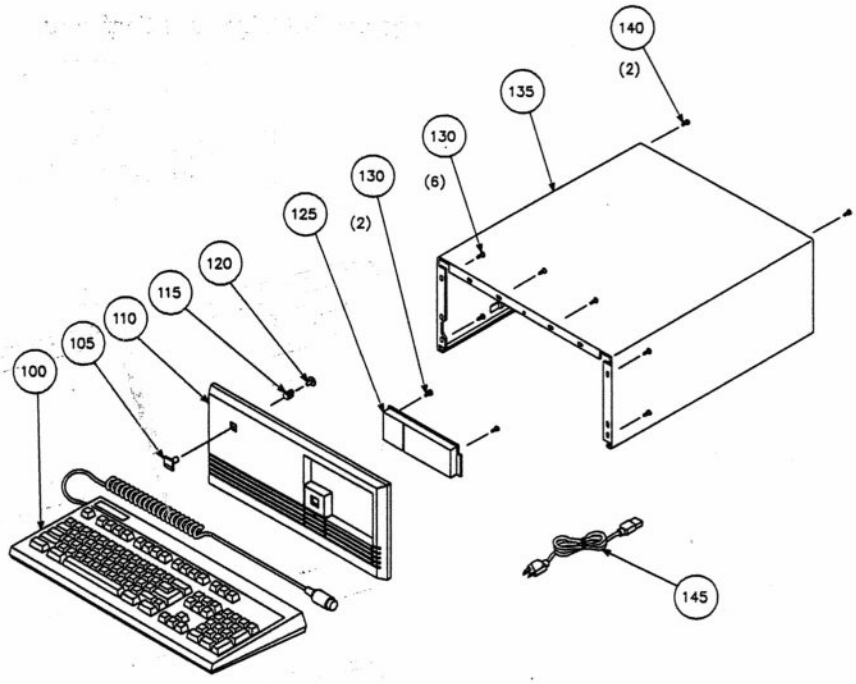

Table 6-1. *Parts List for Cabinet and External Parts*

Reference Number	Part Number	Part Description
100	163-73	Keyboard, 101-key
105	391-763-2	Name plate, logo
110	210-155	Bezel, trim
115	258-797	Spring, compression
120	438-88	Fastener plug, plastic
125	203-2437	Panel, 5.25-inch drive
130	250-1556	Screw, pan, phillips, 6-BT x .375
135	90-1414	Cover, cabinet
140	250-1650	Screw, thumb, 6-32 x .375
145	89-65	Cord, power, shielded, US

Figure 6-2. *Chassis, Brackets, Mounting Hardware, and Drive Cables*

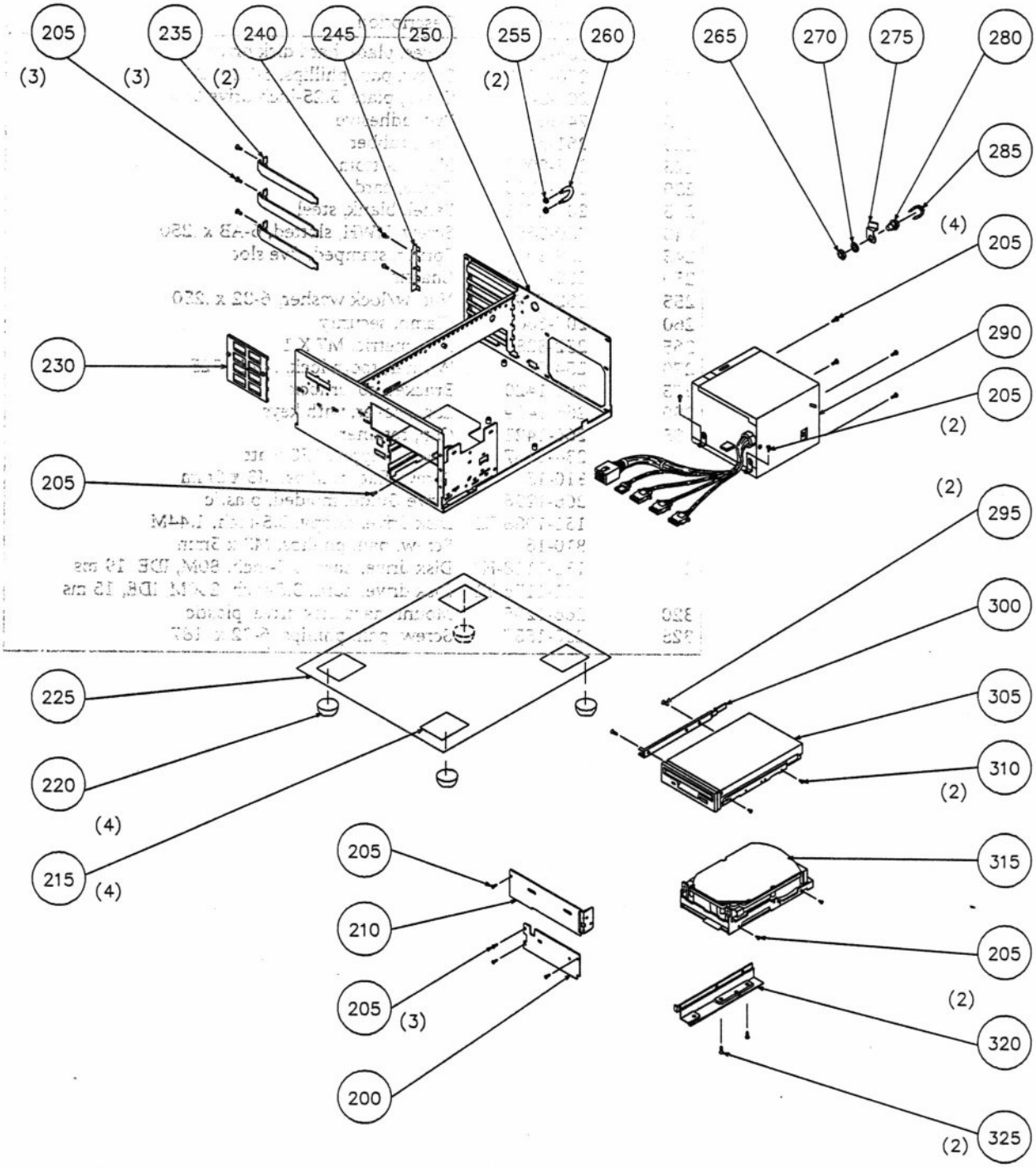

Table 6-2. *Parts List for Brackets and Mounting Hardware*

Reference Number	Part Number	Part Description
200	205-2112	Cover, plate, hard disk drive
205	250-1538	Screw, pan, phillips, 6-32 x .250
210	204-3403	Cover, plate/5.25-inch drive bracket
215	74-56	Pad, adhesive
220	261-76	Feet, rubber
225	205-2098	Plate, bottom
230	266-1305	Guide, card
235	204-2721	Panel, blank, steel
240	250-365	Screw, HWH, slotted, 6-AB x .250
245	258-801	Spring, stamped, five slot
250	200-1642	Chassis
255	252-799	Nut, w/lock washer, 6-32 x .250
260	207-666	Clamp, security
265	252-828	Nut, metric, M7 X 1
270	254-53	Washer, tooth lock, .49 X .025
275	266-1420	Bracket, cover lock
280	266-1419	Lock, cover, with keys
285	266-1421	Clip, retainer
290	234-1187	Power Supply, 150 watt
295	810-15	Screw, flat, phillips, M3 x 5mm
300	266-1296	Drive Guide, molded, plastic
305	151-1088-E2	Disk drive, floppy, 3.5-inch, 1.44M
310	810-16	Screw, pan, phillips, M3 x 5mm
315	151-1118-H1	Disk drive, hard, 3.5-inch, 80M, IDE, 19 ms
	151-1176-Y1	Disk drive, hard, 3.5-inch, 200M, IDE, 15 ms
320	266-1295	Mount, hard disk drive, plastic
325	250-1557	Screw, pan, phillips, 6-32 x .187

Figure 6-3. *Circuit Cards and Cables*

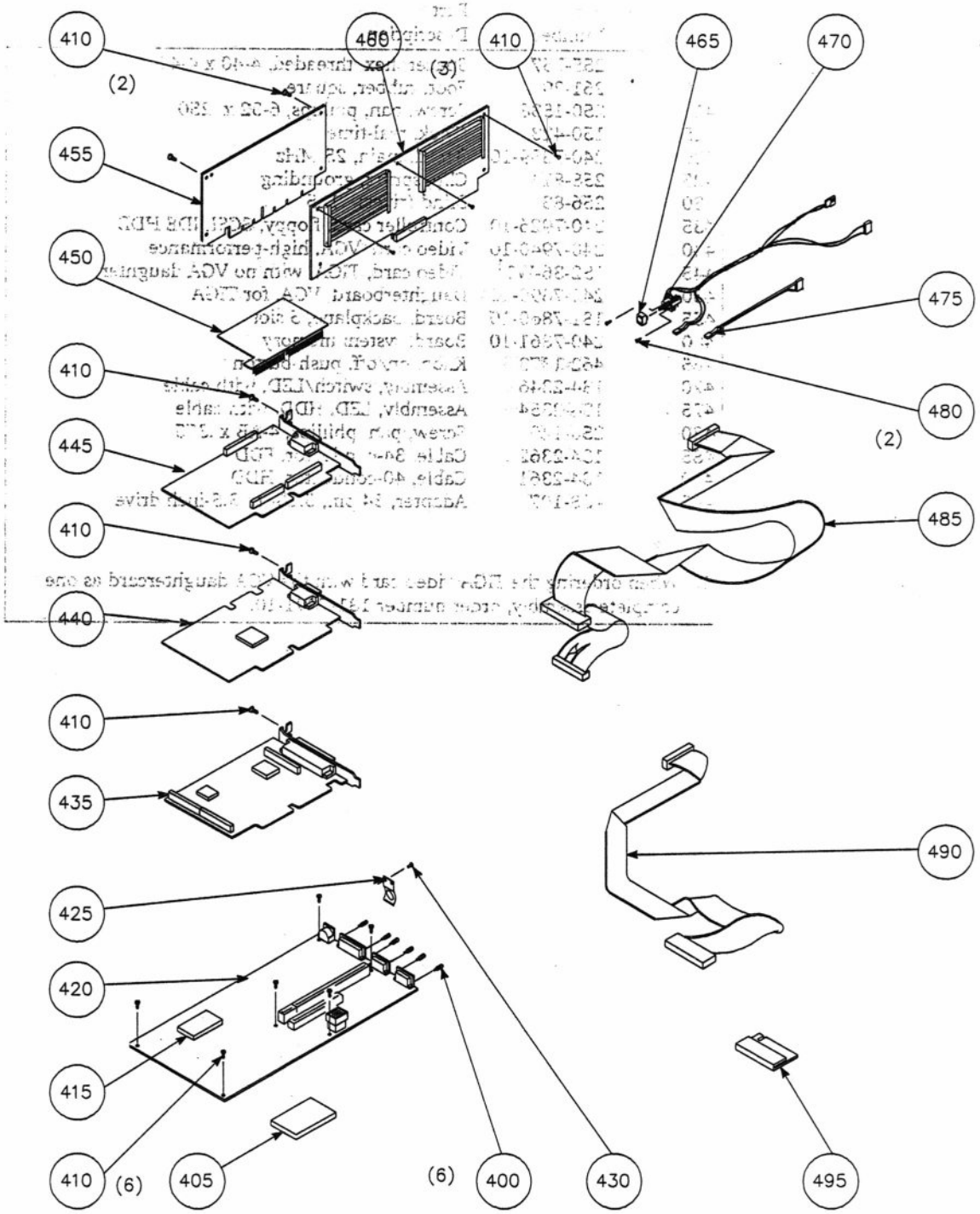

Table 6-3. *Parts List for Circuit Cards and Cables*

Reference Number	Part Number	Part Description
400	255-757	Spacer, hex, threaded, 4-40 x 4-40
405	261-29	Foot, rubber, square
410	250-1538	Screw, pan, phillips, 6-32 x .250
415	150-423	Clock, real-time
420	240-7859-10	Board, main, 25 MHz
425	258-814	Clip, spring, grounding
430	256-83	Blind (rivet), .125
435	240-7926-10	Controller card, floppy, SCSI, IDE HDD
440	240-7940-10	Video card, VGA, high-performance
445	152-36-W1[1]	Video card, TIGA, with no VGA daughter
450	240-7890-10[1]	Daughterboard, VGA, for TIGA
455	181-7860-10	Board, backplane, 5 slot
460	240-7861-10	Board, system memory
465	462-1373	Knob, on/off, push-button
470	134-2346	Assembly, switch/LED, with cable
475	134-2354	Assembly, LED, HDD, with cable
480	250-1408	Screw, pan, phillips, 4-AB x .375
485	134-2362	Cable, 34-conductor, FDD
490	134-2361	Cable, 40-conductor, HDD
495	438-107	Adapter, 34 pin, 5.25- to 3.5-inch drive

NOTE

1. When ordering the TIGA video card with the VGA daughtercard as one complete assembly, order number 181-7891-10.

Specifications

CPU

Processor	Intel 80486, 32-bit architecture
Optional Coprocessor	Weitek WTL 4167 extended math coprocessor
Clock Speed	25 MHz CPU and Coprocessor

Memory

System Memory

SIMMs	4M EISA-compatible RAM (standard); expandable to 64M on system memory card
EMS	64M maximum enhanced 3.2 hardware EMS
Cache	8K Cache internal to 80486 processor, 4-way set associative
Queue (Write Buffer)	4-deep internal (80486) FIFO with read-around 8-deep external FIFO with read-around
ROM	64K read-only memory to store BIOS code and Monitor program code; functionality is transferred to RAM at power-up
OEM ROM	Socket for 64K optional ROM; functionality is transferred to RAM at power-up
EEPROM	Non-volatile serial EEPROM to store user password 8K x 8 EEPROM provides non-volatile memory to store EISA configuration
Real-time Clock	The RTC chip provides the clock/calendar functions as well as 50 bytes of battery backed CMOS RAM for storage of AT compatible configuration data such as floppy drive type, winchester drive type, video, memory, etc.

Expansion Bus

ISA Cards	Supports up to 12M of ISA-compatible RAM
EISA Cards	Supports up to 4G of EISA-compatible RAM
Total RAM	4G of EISA-compatible RAM (including 12M of ISA-compatible RAM)

Power

Line Voltage

90 VAC to 132 VAC or 180 to 264 VAC (auto switching between ranges)

Line Frequency

48 thru 62 Hertz

Power Supply Output

+5 VDC (+5%, −3%) @ 17A, +12 VDC (+7%, −5%) @ 5A, +12 VDC (±10%) @ .5A, −12 VDC (±10%) @ .5A (power supply can supply a total of 150W output)

Input/Output

Serial

Two asynchronous serial ports configurable as COM1 (address 3F8H) or COM2 (2F8H)support baud rates of 110, 150, 300, 600, 1200, 2400, 4800, and 9600 bits/second; selectable protocols. The serial ports may be individually disabled if desired.

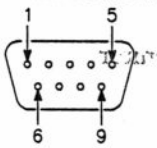

PIN	SIGNAL
1	Carrier Detect (CD)
2	Receive Data (RD)
3	Transmit Data (TD)
4	Data Terminal Ready (DTR)
5	Ground
6	Data Set Ready (DSR)
7	Request to Send (RTS)
8	Clear to Send (CTS)
9	Ring Indicate (RI)

Parallel

One parallel port configurable as LPT1 (378H) or LPT2 (278H), designated as an output or input port

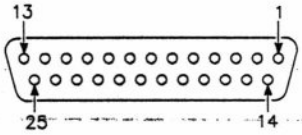

PIN	SIGNAL
1	Strobe
2 – 9	Data bits 0 – 7
10	Acknowledge
11	Busy
12	Page end
13	Select
14	Auto feed
15	Error
16	Initialize printer
17	Select input
18 – 25	Ground

Video

High-Performance VGA (Part Number 240-7940-10)

Compatibility

100% VGA register- and BIOS-level compatible; supports EGA, CGA, MDA, and Hercules formats as a subset of VGA

Display Memory

256K of video DRAM

Eight sockets for additional 256K of video DRAM (optional)

Bus Interface

16-bit PC/AT (ISA) type interface

Vertical Sync

40 – 70 Hz, depending on video mode and monitor

Signal Type

Analog RGB; 0 – 0.714 V; 75 Ω impedance

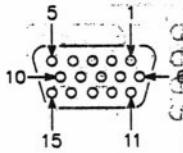

PIN	SIGNAL
1	Red
2	Green
3	Blue
4	Monitor type sense
5	Not used
6	Red return (ground)
7	Green return (ground)
8	Blue return (ground)
9	Key (no pin)
10	Sync return (ground)
11	Monitor type sense
12	Monitor type sense
13	Horizontal sync (+)
14	Vertical sync (–)
15	No connection

Monitor Timing

The high-performance VGA card is capable of providing the 31.49 kHz horizontal sync signal required by most analog monitors. In addition, it can provide various other horizontal timing signals necessary for extended graphics modes for driving variable frequency and interlaced displays (31.0, 31.1, 31.5, 35.0, and 35.5 kHz). Please note that not all monitors are capable of displaying extended graphics. Refer to the *Z-486/25E Owner's Manual* for further information.

Feature Connector

One standard VGA feature connector is used to connect the VGA card to a compatible high-resolution card (and monitor)

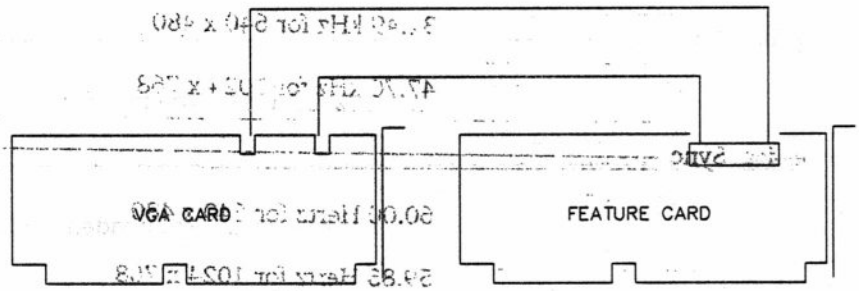

Pin Assignments

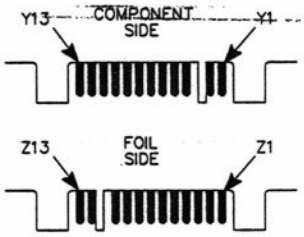

PIN	SIGNAL	PIN	SIGNAL
Y1	C0	Z1	GND
Y2	C1	Z2	GND
Y3	C2	Z3	GND
Y4	C3	Z4	$\overline{\text{FC Data EN}}$
Y5	C4	Z5	$\overline{\text{FC Sync EN}}$
Y6	C5	Z6	$\overline{\text{FC Clock EN}}$
Y7	C6	Z7	NC
Y8	C7	Z8	GND
Y9	FC clock	Z9	GND
Y10	FC blank	Z10	GND
Y11	FC H sync	Z11	GND
Y12	FC V sync	Z12	NC
Y13	NC	Z13	NC

Z-649 TIGA Compatible Video Card with VGA Daughtercard (Part Number 181-7891-10)

Compatibility

BGA (Business Graphics Array/Adapter) compatible, TIGA (Texas Instruments Graphics Architecture) software standard compatible, and VGA compatible with VGA daughterboard installed (also supports EGA, CGA, MDA and Hercules as a subset of VGA).

Display Memory

512K VRAM, 128K DRAM standard with option to add another 512K of VRAM and another 512K DRAM

Horizontal Sync

31.49 kHz for 640 x 480

47.70 kHz for 1024 x 768

Vertical Sync

60.00 Hertz for 640 x 480

59.85 Hertz for 1024 x 768

Resolution

640 x 480 or 1024 x 768, non interlaced

BUS Interface

PC/AT (ISA) Bus interface, 8- or 16-bit data path

Signal Type

Analog RGB; 0 – 0.714 V; 75 Ω impedance

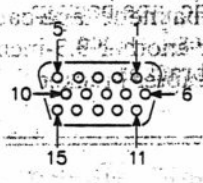

PIN	SIGNAL
1	Red video
2	Green video
3	Blue video
4	Monitor type sense
5	Ground
6	Red ground
7	Green ground
8	Blue ground
9	No connection
10	Sync ground
11	Monitor type sense
12	Monitor type sense
13	Horizontal sync
14	Vertical sync
15	No connection

VGA Daughtercard

This TIGA video card contains a plug-on VGA daughtercard which provides the VGA functions of the high-performance VGA card described in the previous section. The specifications are the same except the daughtercard contains no provision for adding additional video memory.

Secondary Storage

Standard

One 3.5-inch, 1.4M floppy disk drive

One 3.5-inch IDE 80M (or 200M depending on model) hard disk drive

Optional

One 5.25-inch slot is available for addition of 5.25-inch half-height floppy disk drive (360K or 1.2M), or 5.25-inch magnetic tape backup drive, a 5.25 inch half-height hard disk drive, or another 3.5-inch floppy disk drive (720K or 1.4M) mounted in adapter bracket

Magnetic Tape Media

Support for one SCSI magnetic tape backup unit added to the drive bay assembly (as if it were a 5.25-inch disk drive). Interfaces to the SCSI port on the disk controller card.

Keyboard

Key layout

101 keys including alphanumeric, cursor control, numeric, and programmable function keys; support for 102-key keyboard

Features

Audible feedback; key repetition; tactile keys; PC-AT compatibility

Options

Supports operating system device drivers for foreign languages and extended character sets

Cable interface

Connects to the computer through a 5-pin DIN connector on the rear panel

Keyboard Connector Pin Assignments

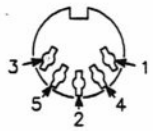

PIN	SIGNAL
1	Clock
2	Data
3	Reset
4	Ground
5	+5 Volts

Cabinet

Dimensions

Width	14.00 inches (35.56 cm)
Depth	15.00 inches (38.10 cm)
Height	6.00 inches (15.24 cm)

Weight

18 pounds (8.10 kg) — base unit weight including floppy and hard disk drives (without video monitor)

Environmental

Operating temperature

50 to 95 degrees F (10 to 35 degrees C)

Storage temperature

−40 to +125 degrees F (−40 to +52 degrees C)

Humidity

Operating	20% to 80% relative humidity (non-condensing)
Storage	20% to 80% relative humidity (non-condensing)

Audio

Transducer

One piezo sound transducer mounted on system board