ZENITH data systems

Groupe Bull

486 SX

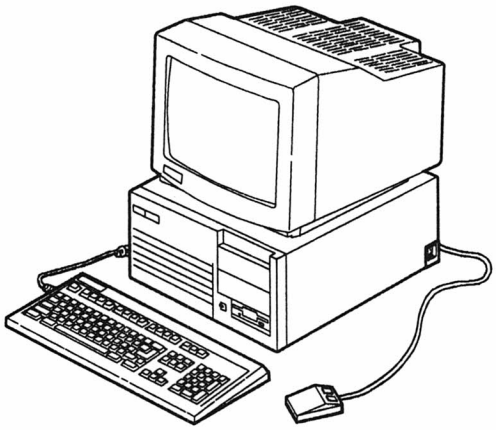

Basic Personal Workstation Computer

Service Manual

860-241 585-0340

Copyrights and Trademarks

Zenith Data Systems Corporation
St. Joseph, Michigan 49085

Contents

Specifications

Chapter 1

Introduction

The Basic Personal Workstation, shown in Figure 1-1, is an AT-compatible computer. The computer uses an 80386SX microprocessor operating at 16 MHz.

This computer supports 1 to 16 megabytes of memory, and uses a 16-bit proprietary bus that supports AT-compatible cards. The main board contains VGA video circuits that can emulate CGA, EGA, MDA, and HGC (Hercules video) display modes. Communications circuits also are included on the main board; one Centronics-type parallel port and two RS-232 serial ports are standard.

Figure 1-1. *Basic Personal Workstation*

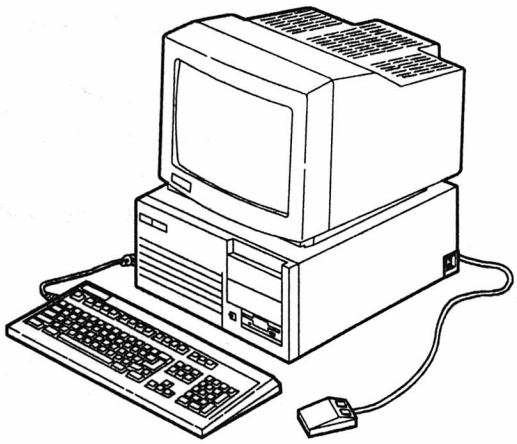

This manual includes operation, configuration, troubleshooting, and service procedures to the major assembly level.

Related Materials

In addition to this service manual, the following items also are available for this computer:

- Owner's manual — Part Number 595-4702. This manual covers basic computer operation.
- Disk-based diagnostics — Model UT-83-A

Tools

Use the following tools and equipment to install, repair, and maintain this computer.

- #1 Phillips screwdriver
- #2 Phillips screwdriver
- Voltmeter

Safety Precautions

To avoid potential shock or personal injury, use the following precautions when servicing this computer.

- Verify correct line voltage selection.
- Use a grounded AC power source.
- Disconnect AC power before opening the cabinet.
- Avoid power-ground shorts.

Base Computer

As shipped from the factory, the computer consists of several major assemblies including the main board, processor module, backplane board, keyboard interface board, a hard disk drive, a floppy disk drive, and a power supply.

Main board — The main board contains most of the computer's control circuitry, including major integrated circuits that perform most of the computer logic functions in the PC-AT architecture.

Processor module — The processor module contains the CPU and a socket for an optional 80387SX numeric coprocessor. The processor module also contains the crystals required for generating clock signals for the CPU and the numeric coprocessor.

Backplane board — The backplane board provides six AT/XT-compatible expansion bus connectors. All six slots are open. The backplane board also includes a connector for attaching a SCSI (small computer system interface) module.

Keyboard interface board — The keyboard interface board provides the physical connection between the keyboard and the main board.

Floppy disk drive — The computer is shipped with at least one floppy disk drive. The disk controller provides support for two floppy disk drives in any combination of the following types:

- 720K, 3.5-inch
- 1.4M, 3.5-inch
- 360K, 5.25-inch
- 1.2M, 5.25-inch

Hard disk drive — The computer has a vertically mounted hard disk drive. The hard disk controller is part of the drive, and uses an IDE (imbedded drive electronics) interface.

Power supply — The switch-mode regulated power supply provides the following outputs:

- +5 VDC @ 17.0 A
- +12 VDC @ 5.0 A
- −12 VDC @ 0.5A

These outputs are electrically isolated from the main voltage and share the cabinet as the common ground. The power supply automatically switches between 115 and 230 VAC.

Keyboard — The computer comes with a 101-key keyboard configured for AT-compatible operation. It features auto-repeat, audible feedback, and software programmability. It can also be configured for XT-compatible operation, as explained at the end of this manual.

Mouse — The mouse is a serial device that communicates with the computer through the COM1 port. The mouse acts as a pointer for on-screen information.

Operation

This section includes power up procedures, the Monitor program, and basic operating information. Refer to the owner's manual for complete operating instructions.

Power Up

Refer to Figure 1-2, and power up the computer and its peripherals in the following order:

1. Monitor
2. Computer
3. Peripherals.

You can also use a power strip that powers up the monitor, computer, and peripherals simultaneously.

Figure 1-2. *Power- Up Sequence*

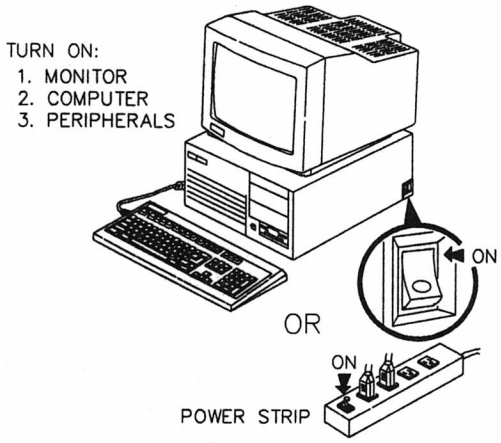

When power is applied:

- The power supply and auxiliary fans start.
- The keyboard resets, status LEDs blink, NUMLOCK remains lit.
- Disk drives initialize (access indicators light, heads seek).
- Internal power-up self-tests run.
- A blinking cursor appears on the display.
- The operating system loads from the hard disk drive or the floppy disk drive (with the autoboot option configured).

If the operating system is not installed, or it is not present on the disk, one of the following messages appears:

```
+++ DISK ERROR: Drive not ready! +++

+++ DISK ERROR: No bootable partitions! +++

No system

Not a bootable partition
```

Refer to the operating system documentation for installation instructions.

If the computer detects faults during the power-up sequence, error messages appear on the display (if the computer can drive the display). These messages are explained in Chapter 3.

Computer Reset

There are three different ways to reset the computer:

1. Press and hold the CTRL, ALT, and DEL keys, then release them. This is referred to as a software reset, and resets the CPU, reinitializes the computer, and initiates the autoboot sequence.

2. Press and hold the CTRL, ALT, and INS keys, then release them. This is also referred to as a software reset, and resets the CPU, reinitializes the computer, and enters the Monitor program.

3. Turn off the computer, wait 15 seconds, and then turn it back on. This is referred to as a hardware reset. All circuits are reset to the power-on state.

The Monitor Program

The MFM-200 Monitor program contains:

- Power-up tests to detect problems that would prevent additional tests or an operating system from loading.
- The boot command to load the operating system.
- User-selectable tests to check the disk drives, keyboard, and memory.
- Video commands to display a color bar, or set video and scroll modes.
- Programming commands.
- The Setup/Configuration program to store hardware configuration information.

Enter the Monitor program using either of two methods:

1. **CTRL-ALT-INS** — Press and hold the CTRL, ALT, and INS keys, and then release them. A message similar to the following appears:

```
MFM-200 Monitor, Version x.x
Memory size: xxxK
Enter "?" for help
->_
```

The first line indicates the ROM version. The second line indicates how much memory is installed, including base and extended. EMS memory is not displayed. The "help" command referenced in the third line displays the command summary, shown in Figure 1-3.

2. **CTRL-ALT-ENTER** — If the CTRL-ALT-INS key combination does not force the computer to enter the Monitor program, press and hold the CTRL, ALT, and ENTER keys, and then release them. The CPU register contents are displayed on the screen, followed by the Monitor prompt.

Note: In some cases the CPU locks up, preventing access by either method. If this happens, turn off the computer, wait 15 seconds, then turn it back on. This clears the CPU and allows you to use the CTRL-ALT-INS key combination.

For more information on the Monitor program commands, refer to the computer owner's manual.

Figure 1-3. *Monitor Command Summary*

-MFM-200 Command Summary-

CMD:	EXPLAINATION	SYNTAX
?:	Help	?
B:	Boot from disk	B [{F|W}[{0|1|2|3}][:<partition>]
C:	Color bar	C
D:	Display memory	D [<range>]
E:	Examine memory	E <addr>
F:	Fill memory	F <range>,{<byte>|"<string>"}
E:	Execute(Go)	G [=<addr>][,<breakpoint>]...
H:	Hex math	H <number1>,<number2>
I:	Input from port	I <port>
M:	Move memory block	M <range>,<dest>
O:	Output to port	O <port>,<value>
R:	Examine Registers	R [<register>]
S:	Search memory	S <range>,<byte>|"<string">
T:	Trace program	T [<count>]
U:	Unassemble program	U [<range>]
V:	Set Video/Scroll	V [M<mode>][S<scroll>]
	Where <range> is:	<addr>{,<addr>|L<length>}
TEST:	Extended diagnostics	TEST
SETUP:	Define hardware Setup	SETUP

->_

Boot Command

The boot command syntax is:

```
B[{F|W}][{0|1}][:<PARTITION>]
```

Extend the boot command to BF (boot from floppy) or BW (boot from Winchester, a reference to the hard disk) to boot a specific drive. If the hard drive is divided into partitions, add the partition numbers as required. This computer supports up to four partitions per hard disk drive. Refer to the operating system documentation for additional information.

Error messages appear if you attempt to boot from a non-existent drive. To correct this, access the Monitor program and enter the correct boot command. For more information about error messages, refer to Chapter 3.

ROM-Based Tests

The Monitor program contains five tests. To access the test menu, type TEST at the Monitor prompt and press ENTER. The following menu appears:

```
CHOOSE ONE OF THE FOLLOWING:

1. DISK READ TEST
2. KEYBOARD TEST
3. BASE MEMORY TEST
4. EXTENDED MEMORY TEST
5. POWER-UP TEST
6. EXIT

ENTER YOUR CHOICE:
```

To run a test, type the number that corresponds to the test. With the exception of the keyboard test, each test continues to run until an error is detected or the test is halted.

To stop a test, press the ESC key once. Press the ESC key a second time to return to the test menu, where you can select another test or select EXIT to return to the Monitor prompt.

All tests, except for the keyboard test, display a test count similar to the following:

```
SAMPLE TEST
                                TEST COUNT = x
TYPE <ESC> TO ABORT
```

If an error is detected during the test, information about the error appears on the display.

Disk Read Test — To run the disk read test, you must have a formatted disk in the drive. This test continuously reads the first sector of track 0 on the default drive. To change the drive under test, manually boot from the drive you want to test.

Successful completion of this test indicates the drive can read the disk. If the computer still fails to boot, problems could exist with memory or related control circuits.

While testing floppy disk drives, the LED on the drive glows and the boot track on the drive is read continuously.

While testing hard disk drives, the power indicator changes color from green to orange and remains orange as the boot track on the drive is read continuously.

Keyboard Test — This test checks the operation of most keys on the keyboard. Valid entries display an ASCII character or symbol and a key scan code each time a key is pressed. The keyboard test does not test the following keys:

PRINT SCREEN
SCROLL LOCK
PAUSE
CAPS LOCK
SHIFT
CTRL
ALT
NUM LOCK
ESC

Base Memory Test — This test performs a fast march algorithm on all memory in the first megabyte of the system memory map, including video memory.

While the test is running, a click can be heard. When the test reaches video memory, a series of moving patterns is displayed on the screen.

Extended Memory Test — This test performs the same fast march algorithm on memory above the 1 megabyte base memory.

Power-Up Test — This test continuously repeats some of the power-up tests used during startup. This test checks the following:

- CPU — The CPU test fills all registers (except CS, IP, SS, and SP) with zeros and ones, sets and clears flag bits, determines if conditional jumps work, and tests the arithmetic/logic unit (ALU).

- ROM — The ROM test generates a checksum for the ROM which is then compared with the ROM's checksum (located in the last two bytes of the ROM).

- Timer 1 interrupt — The timer test initializes the real-time clock and verifies its accuracy within ±10%.

Chapter 2

Disassembly and Options

This chapter provides instructions for:

- Disassembly and reassembly.
- Replacing the backup battery.
- Installing upgrades and options in the computer chassis.

Disassembly

Note the orientation and placement of any cables you remove when you disassemble the computer. To reassemble the computer reverse the order of the following procedures unless instructed otherwise.

Static Precautions

When handling circuit boards or integrated circuits (ICs):

- Do not remove any static-sensitive device from its protective packaging until you are ready to install it.
- Equalize the static electricity between the work surface, the device, and you by touching the work surface with one hand and then picking up the device with the other hand.
- Once you remove the device from its protective packaging, do not set it down or let go of it until it is installed in the computer or returned to its protective packaging.

Removing the Cover

Caution: Avoid shock hazard. Unplug the computer and disconnect the line cord before beginning disassembly.

1. Place a shipping insert (or a scratch disk) in the floppy drive(s).
2. Disconnect the keyboard, video monitor, and all other peripherals from the computer.
3. Refer to Figure 2-1 and unlock the cover.

Figure 2-1. *Cover Lock*

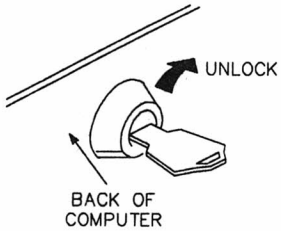

4. Refer to Figure 2-2 and remove and save the screws that secure the cover to the computer.

Figure 2-2. *Removing the Cover*

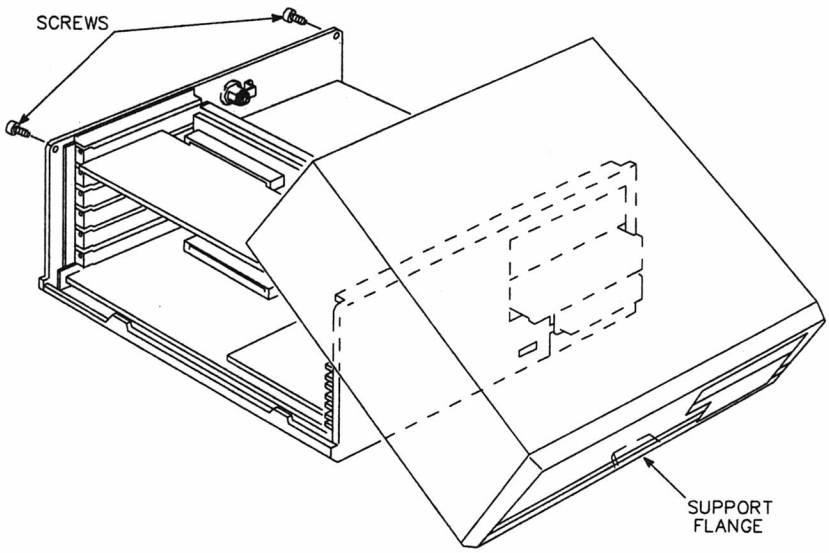

5. Remove the cover by sliding it toward the front of the computer. Support the cover as you slide it off to avoid contact with circuit cards or cables.

Circuit Cards

Notice: Use static precautions.

1. Remove the cover as described earlier.
2. Remove any cables attached to the card. Note their location and orientation.
3. Refer to Figure 2-3 and remove the screw that secures the circuit card to the computer chassis. Save the screw. Grasp the card and pull it free of the connector.
4. Place the card in protective packaging.

Figure 2-3. *Removing/Installing a Circuit Card*

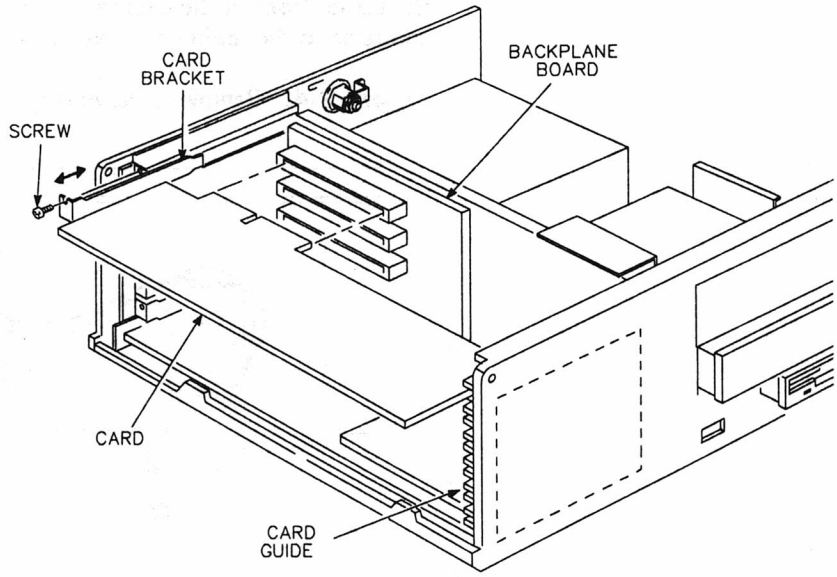

Backup Battery Replacement

Caution: The battery contains lithium. To prevent explosion hazards, avoid shorting the battery, and do not crush, incinerate, or attempt to recharge it. Use the disposal procedure described later in this chapter.

Notice: Removing the battery deletes all configuration information stored in the CMOS RAM. Note the current setup information before removing the battery so you can reenter the correct information after reassembly.

The battery package is held in place by a plastic wire-tie attached to the inside front of the cabinet, as shown in Figure 2-4. The battery connects to the main board at P513.

Figure 2-4. *Removing the Battery*

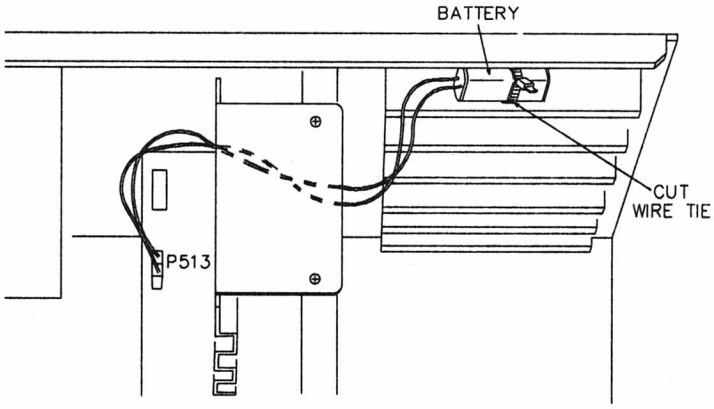

1. Remove the cover.
2. Clip the wire-tie that holds the battery in place.
3. Disconnect the connector at P513 by pulling it off the main board.

Note: When you install a new battery, use a new wire-tie. Chapter 4 lists the wire-tie part number.

Disposing of the Battery

Caution: The battery contains lithium. To prevent explosion hazards, avoid shorting the battery, and do not crush, incinerate, or attempt to recharge it.

1. Clip all exposed battery leads. Do not short the battery!
2. Wrap the battery in insulating tape to prevent accidental shorting.
3. Pack the battery so it cannot be crushed.
4. Dispose of the battery in the trash.

Keyboard Interface Board

1. Remove the cover.
2. Refer to Figure 2-5 and remove the two screws that secure the keyboard interface board bracket to the rear of the cabinet.

Figure 2-5. *Removing the Keyboard Interface Board Bracket*

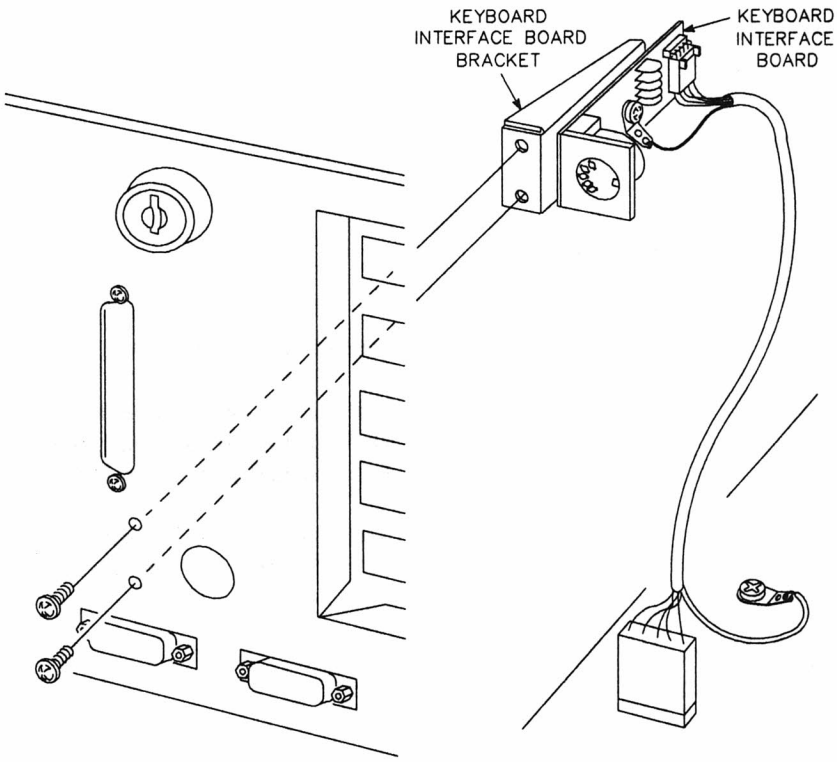

3. Remove the keyboard interface board and the bracket together. Place them on top of the power supply.

4. Refer to Figure 2-6 and remove the screw that secures the keyboard ground cable.

Figure 2-6. *Removing the Keyboard Interface Board from the Bracket*

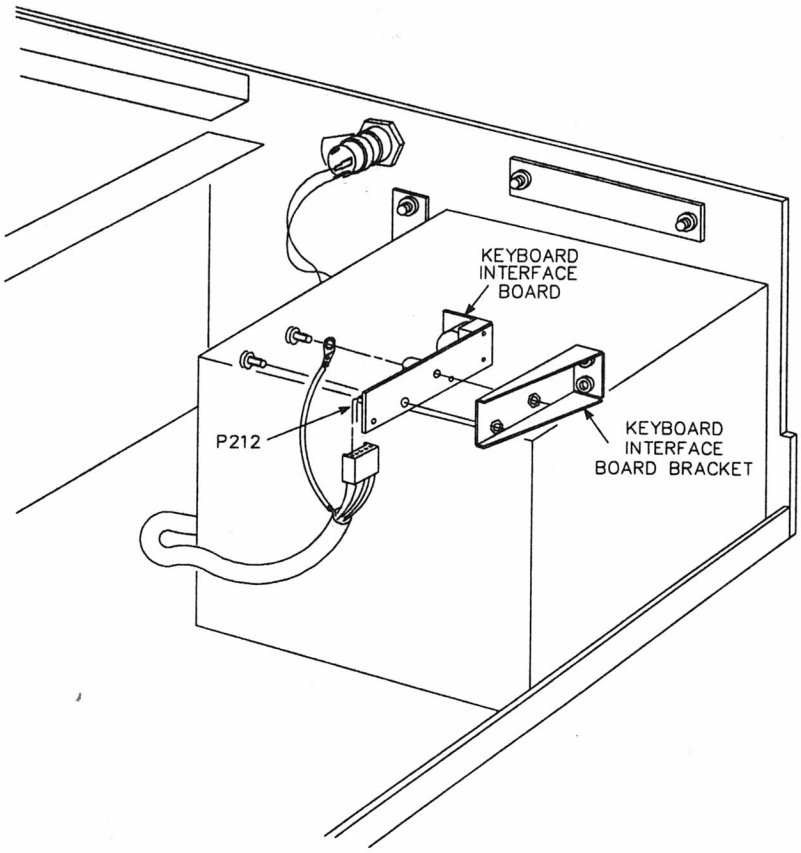

5. Disconnect the connector at P212.

   Note: The connector at P212 is not keyed. When reinstalling the keyboard interface board, make sure the red wire of the connector is connected to pin 1 of P212 (closest to the edge of the board).

6. Place the keyboard interface board on your work surface. Remove the screw that secures the keyboard interface board to the bracket.

Indicator LED Board

1. Remove the cover.

2. Refer to Figure 2-7 and bend the plastic retaining clips to pull the indicator LED board away from the front of the cabinet.

Figure 2-7. *Removing the Indicator LED Board*

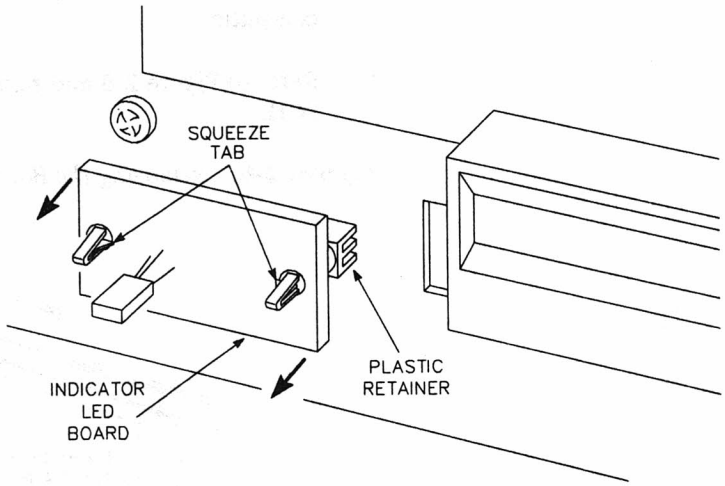

3. Disconnect the cable at P011, on the backside of the indicator LED board.

Backplane Board

Notice: Use static precautions.

1. Remove the cover.

2. Remove any circuit cards installed in the backplane board. Save these cards and reinstall them when you finish servicing the computer.

3. Refer to Figure 2-8 and remove the connectors from P011 and P012.

Figure 2-8. *Removing the Backplane Board*

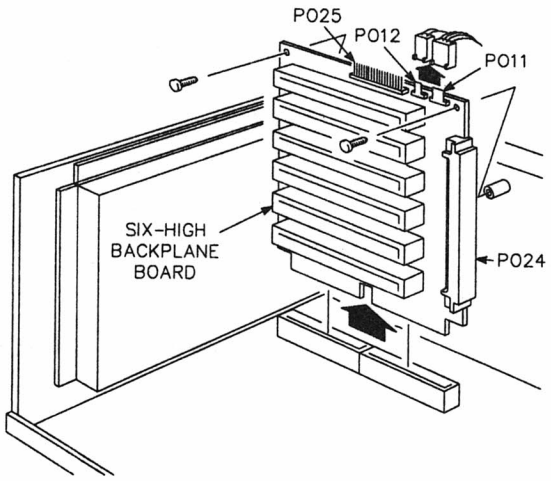

4. Remove the two screws that secure the backplane board to the chassis.

5. Refer to Figure 2-8 and remove the backplane board by pulling it up and out of the edge connector on the main board.

Processor Module

Notice: Use static precautions.

1. Remove the cover.

2. Refer to Figure 2-9 and locate the processor module.

Figure 2-9. *Processor Module*

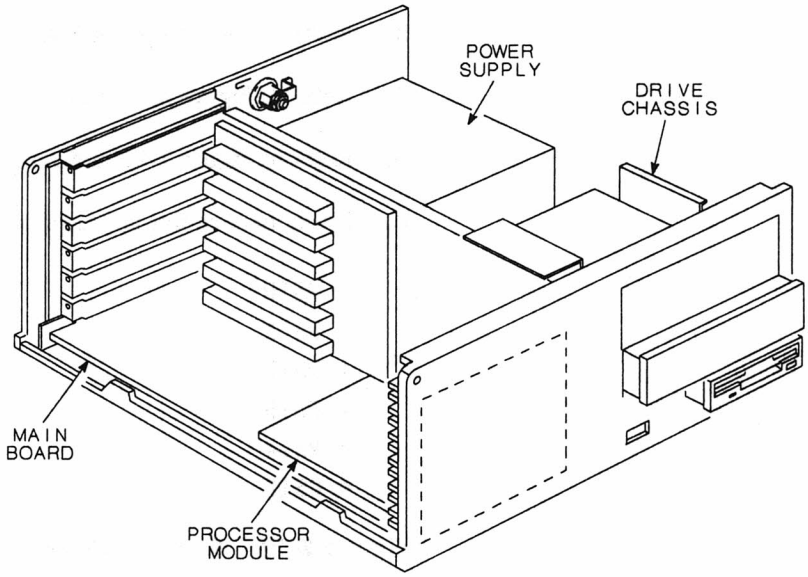

3. Remove any circuit cards that block the removal of the processor module. Save these cards and reinstall them when you finish servicing the computer.

4. Refer to Figure 2-10 and remove the processor module.

Figure 2-10. *Removing the Processor Module*

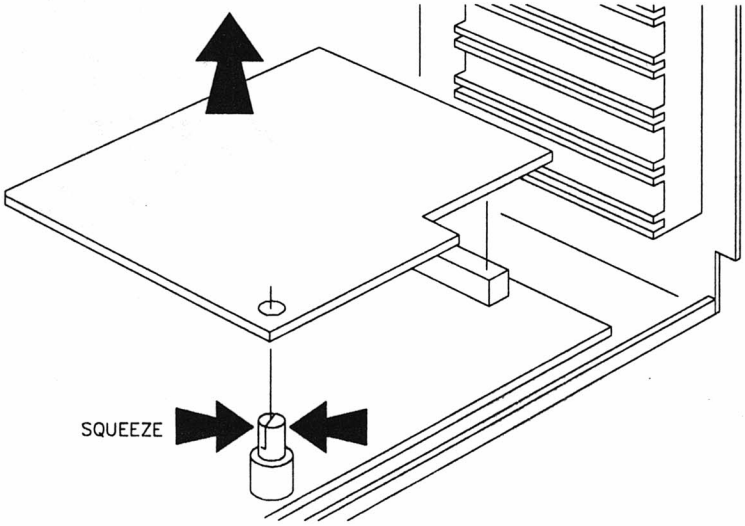

Main Board

Notice: Use static precautions.

1. Remove the cover.
2. Remove any circuit cards installed in the backplane board. Save these cards and reinstall them when you are finished servicing the computer.
3. Remove the backplane board as described earlier in this chapter.
4. Refer to Figure 2-11 and remove the five screws.
5. Refer to Figure 2-11 and remove the hex-nut spacers.
6. Disconnect cables attached to the following connectors:
   - P510
   - P511
   - P512
   - P513
   - P514
   - P515

Figure 2-11. *Removing the Main Board*

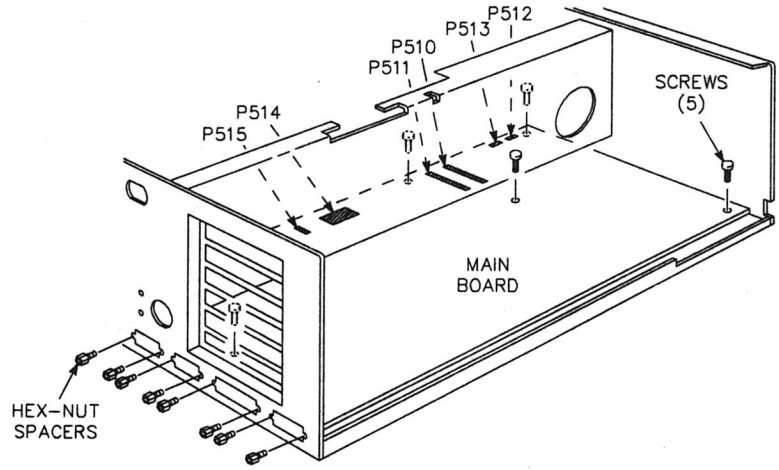

7. Slide the main board toward the front of the computer so the video, parallel, and serial connectors clear the rear of the cabinet, as shown in Figure 2-12.

8. Refer to Figure 2-12 and carefully slide the main board out of the cabinet.

Figure 2-12. *Removing the Main Board from the Cabinet*

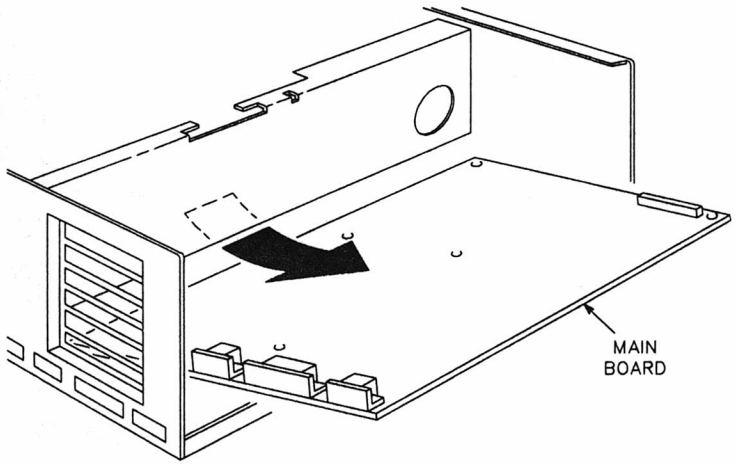

SIMMs

Notice: Use static precautions.

1. Remove the cover.

2. Refer to Figure 2-13 and locate the SIMM sockets.

Figure 2-13. *Location of SIMM Sockets*

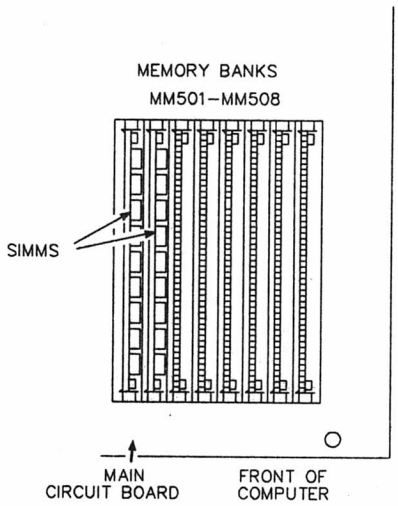

3. Refer to Figure 2-14 and disconnect the drive control and power cables that are attached to any drives installed in the 5.25-inch drive chassis; push them aside.

4. Remove and save the three screws that secure the left 5.25-inch drive bracket to the main chassis, as shown in Figure 2-14. Remove the drive bracket and set it aside.

Figure 2-14. *Removing the Left 5.25-Inch Drive Bracket*

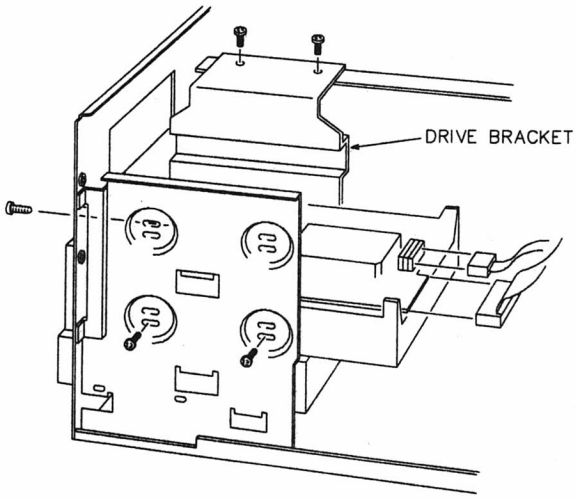

5. Remove and save the screws that secure the drives to the computer chassis, as shown in Figure 2-14. Remove the drives and set them aside.

6. Before installing new SIMMs, note the orientation and locations of the factory-installed SIMMs. Refer to Figure 2-15 and the following procedure for installing and removing SIMMs.

   To install a SIMM:

   a. Position the SIMM with the component side facing away from the power supply.

   b. Tip the SIMM slightly toward the power supply and guide it into the socket on the main board, as shown in Figure 2-15.

   c. Gently push the SIMM to the left until it is upright. As the latches at each end of the socket snap over the ends of the SIMM, it makes a distinct click.

Figure 2-15. *Installing SIMMs*

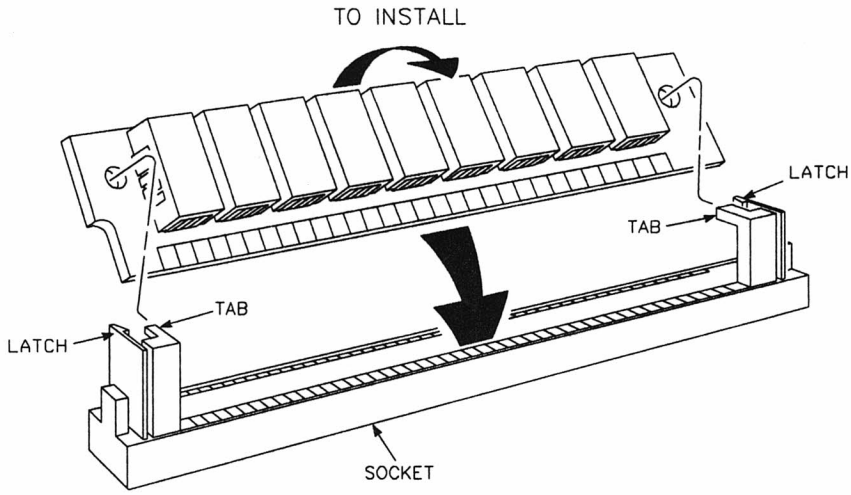

   To remove a SIMM:

   a. Use a small flat-bladed screwdriver to release the latches at each end of the SIMM as shown in Figure 2-15.

   b. Gently tip the SIMM toward the power supply and lift it out.

7. Reinstall the left 5.25-inch drive bracket and secure it with the three screws you removed and saved earlier.

8. Reinstall the disk drive(s) you removed, using the screws you removed and saved earlier.

9. Reconnect the drive control and power cables. Be sure the striped edge on the drive control cable lines up with the pin 1 end of the connector.

10. Replace the cover.

11. Run the Setup program and update the memory information. Refer to the computer owner's manual if you are unfamiliar with this procedure. Update the Setup Record in the owner's manual.

12. Perform the ROM-based memory test described in Chapter 1 to verify that all memory banks are functioning properly.

13. Run the disk-based memory diagnostic tests to thoroughly check the new memory. Refer to the disk-based diagnostics manual for testing instructions.

Floppy Disk Drives

Notice: Use static precautions.

1. Remove the cover.
2. Remove the controller cable from the drive.
3. Remove the power cable from the drive.
4. Refer to Figure 2-16, and remove the two screws that secure the drive to the right chassis.

Figure 2-16. *Removing a Floppy Disk Drive*

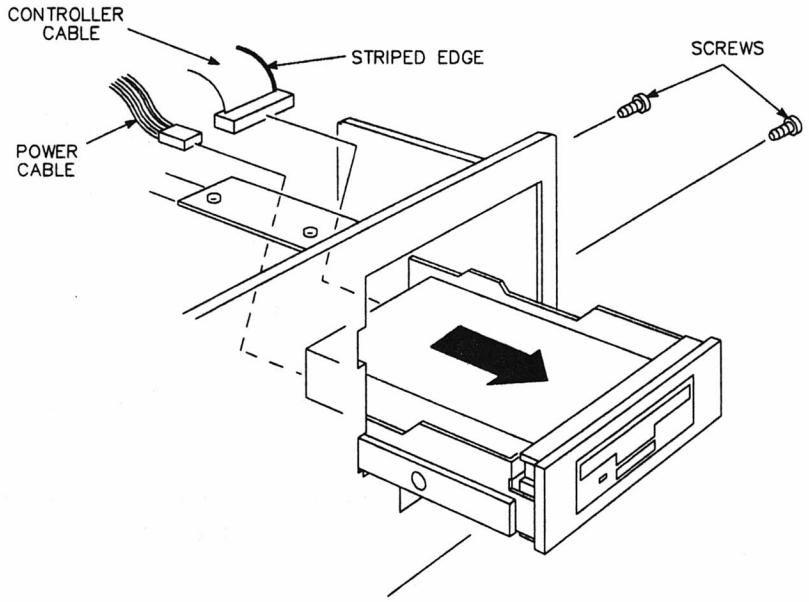

5. Slide the drive toward the front of the computer, as indicated in Figure 2-16.

Hard Disk Drive

Notice: Use static precautions.

1. Remove the cover.

2. Refer to Figure 2-17, and remove the controller cable from the drive.

3. Remove the power cable from the drive.

Figure 2-17. *Removing the Hard Disk Drive*

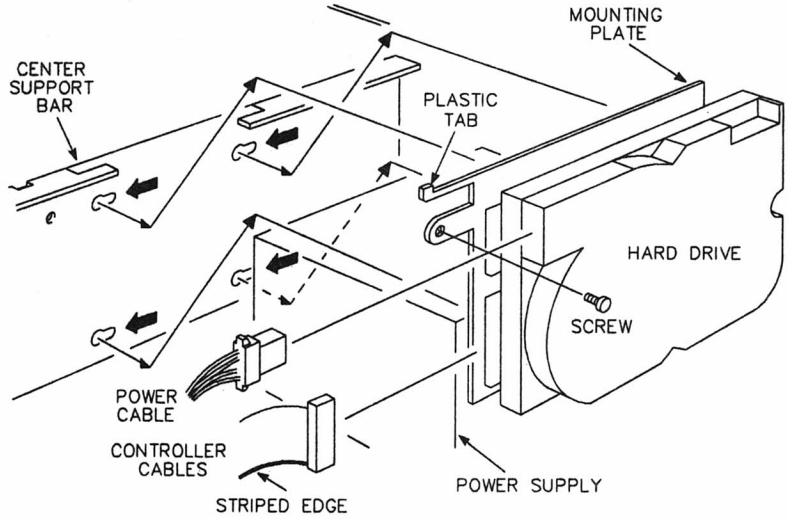

4. Remove the screw that secures the hard drive mounting plate to the center support bar.

5. Push down on the plastic tab, and slide the drive toward the front of the computer, as indicated in Figure 2-17. Remove the hard drive.

6. Refer to Figure 2-18, and remove the mounting plate from the hard drive.

Figure 2-18. *Removing the Hard-Drive Mounting Plate*

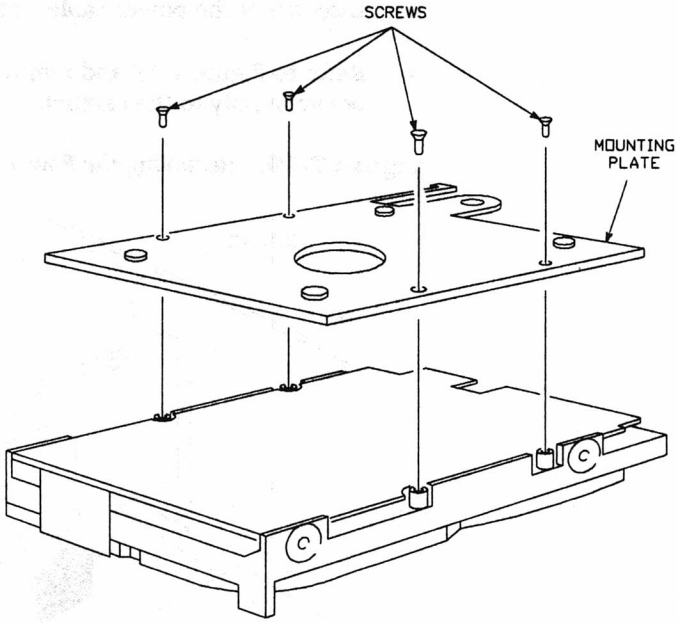

Power Supply

1. Remove the cover.
2. Disconnect the power cables from the disk drives.
3. Disconnect the power cable from the main board.
4. Refer to Figure 2-19 and remove the six screws that secure the power supply to the cabinet.

Figure 2-19. *Removing the Power Supply*

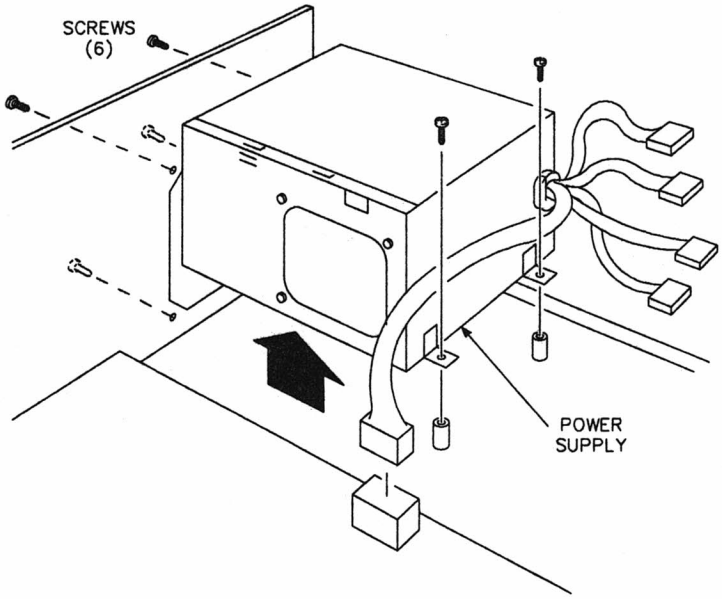

5. Lift the power supply up and out of the cabinet.

Keylock

1. Remove the cover.
2. Refer to Figure 2-20 and loosen the retaining nut and remove the retaining ring.
3. Remove the keylock.

Figure 2-20. *Removing the Keylock*

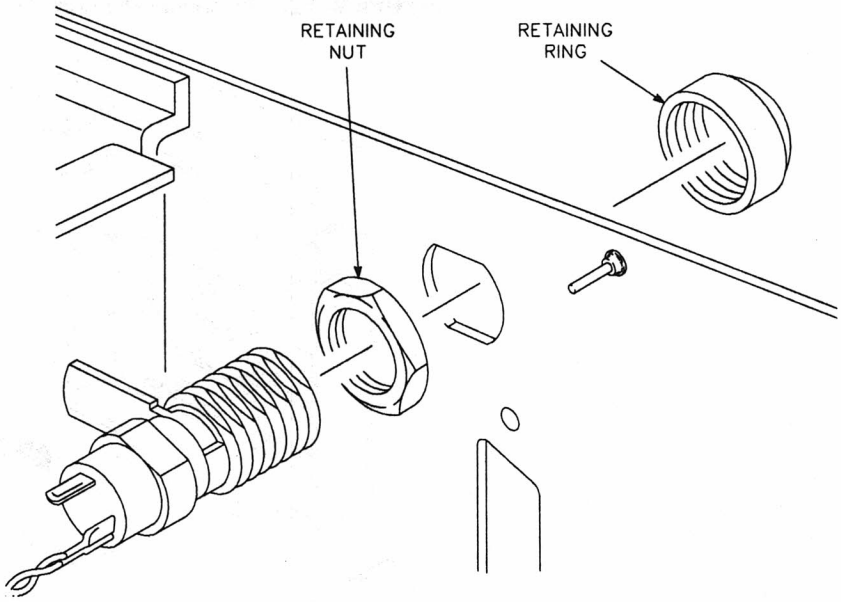

Card Guide and Speaker

1. Remove the cover.

2. If any full-length circuit cards are installed in the backplane, remove them. Save these cards and reinstall them when you finish servicing the computer.

3. Refer to Figure 2-21, and remove the card guide.

Figure 2-21. *Removing the Card Guide*

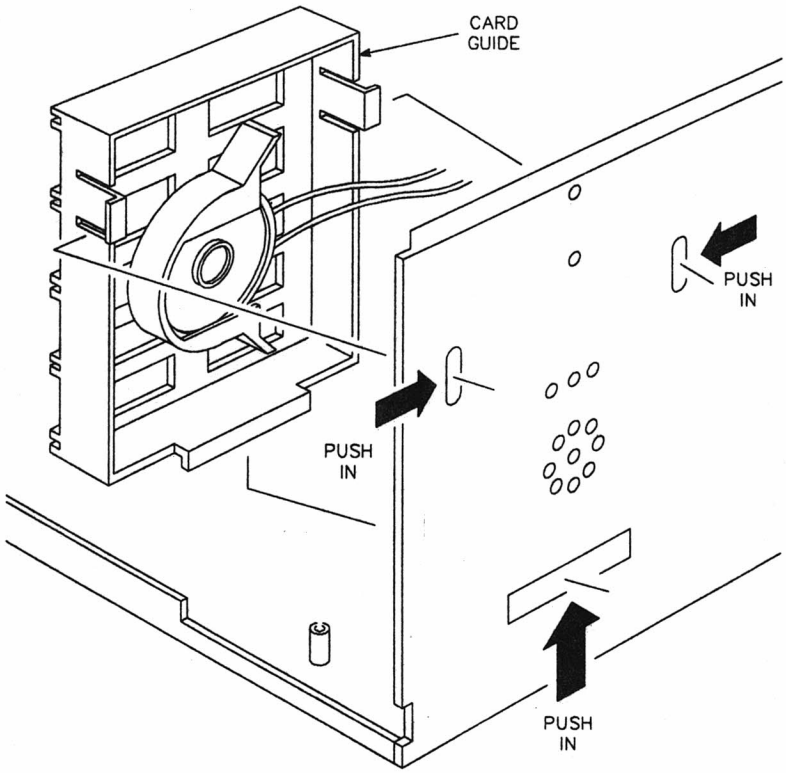

4. Refer to Figure 2-22, and bend the plastic retaining tab far enough so the speaker slides out of the card guide.

Figure 2-22. *Removing the Speaker*

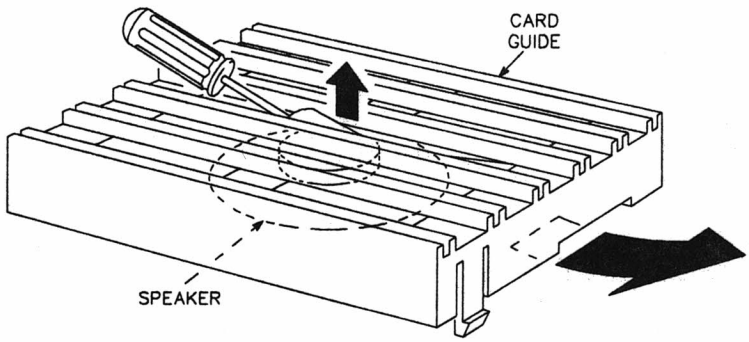

Auxiliary Fan

1. Remove the cover.

2. If the computer has a second floppy disk drive installed, remove the additional floppy drive as described earlier in this chapter.

3. Refer to Figure 2-23 and remove the three screws that secure the left 5.25-inch drive bracket to the cabinet.

Figure 2-23. *Removing the Left 5.25-Inch Drive Bracket*

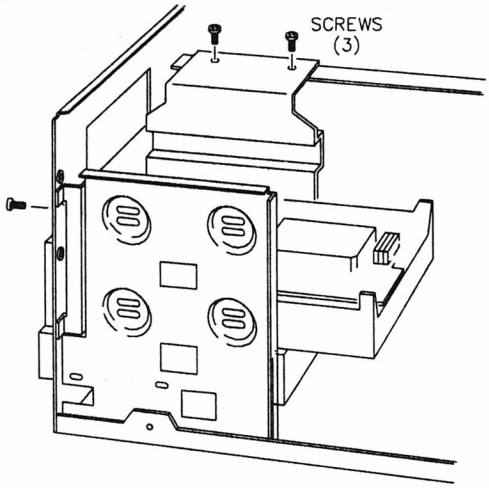

4. Refer to Figure 2-24 and disconnect the two-lead auxiliary fan power cable from P012 on the backplane board.

5. Squeeze the pins, as shown in Figure 2-24, and remove the auxiliary fan.

Figure 2-24. *Removing the Auxiliary Fan*

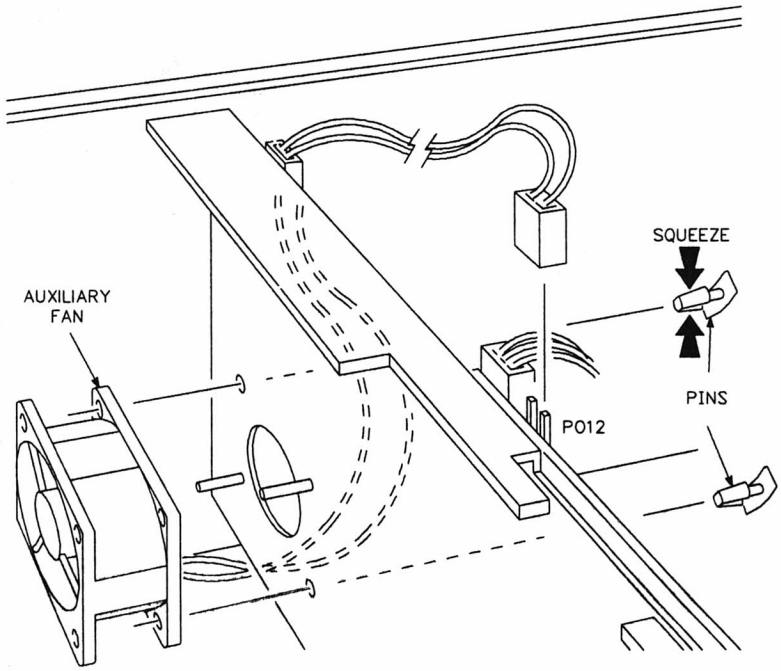

Installing Optional Hardware

The following procedures describe installation of various hardware options.

5.25-Inch Floppy Disk Drive

Notice: Use static precautions.

1. Remove the cover.

2. Using two screws, install the drive rail on the left side of the 5.25-inch disk drive, as shown in Figure 2-25.

Figure 2-25. *Installing the 5.25-Inch Drive Rail*

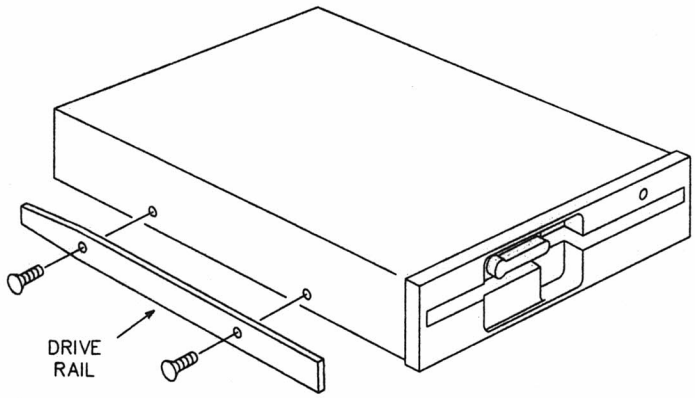

3. Install the floppy drive by sliding it into the selected drive slot. Secure the right side of the disk drive to the chassis using two screws, as shown in Figure 2-26.

Figure 2-26. *Installing the 5.25-Inch Floppy Drive*

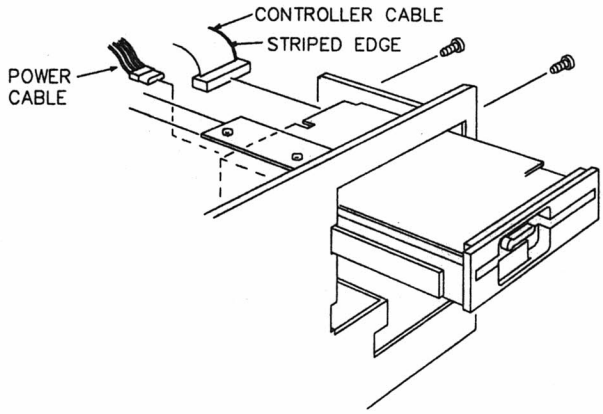

4. Connect the disk drive power and controller cables.

5. Remove the plastic cover from the drive slot for the new drive, as shown in Figure 2-27.

Figure 2-27. *Removing the Drive Slot Cover*

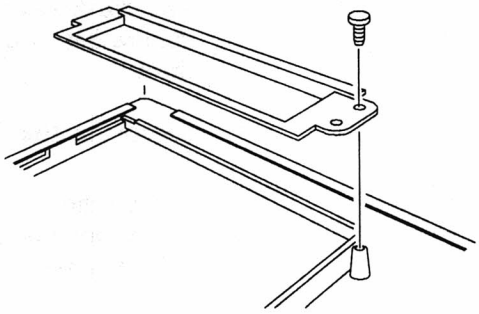

6. Replace the cover.

7. Power up the computer, enter the Setup program, and make the appropriate hardware configuration changes, as described in the computer owner's manual.

3.5-Inch Floppy Disk Drive

Notice: Use static precautions.

1. Remove the cover.

2. Turn the disk drive upside down and place the adapter bracket over the drive as shown in Figure 2-28. Line up the screw holes in the bracket with the corresponding holes in the bottom of the drive.

3. Secure the disk drive to the adapter bracket as follows:

   - Start the two longest screws through the two grommets and rear holes of the bracket into the disk drive. Do not tighten these screws.

   - Start two screws through the front holes of the bracket into the disk drive.

   - Tighten all four screws.

4. If the bracket has a small indicator hole, press a button plug into the hole.

Figure 2-28. *Mounting the Drive Adapter Bracket*

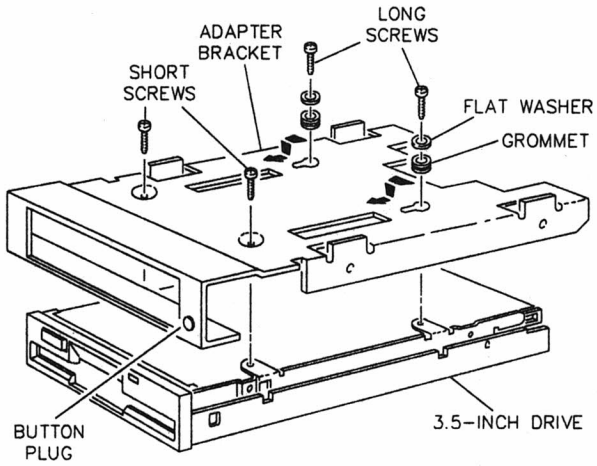

5. Using two screws, install the drive rail on the left side of the 3.5-inch drive adapter bracket as shown in Figure 2-29.

Figure 2-29. *Installing the 3.5-Inch Drive Rail*

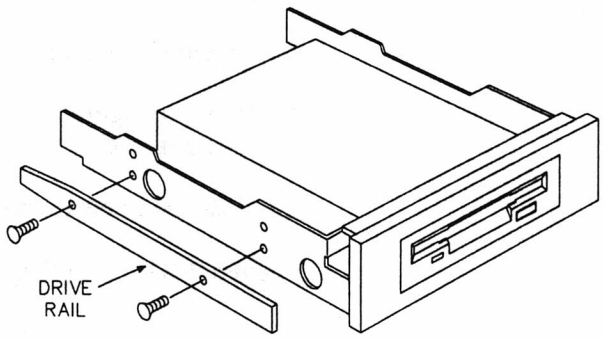

6. Install the floppy drive assembly by sliding it into the selected drive slot. Secure the right side of the drive assembly to the chassis using two screws, as shown in Figure 2-30.

Figure 2-30. *Installing a 3.5-Inch Floppy Drive*

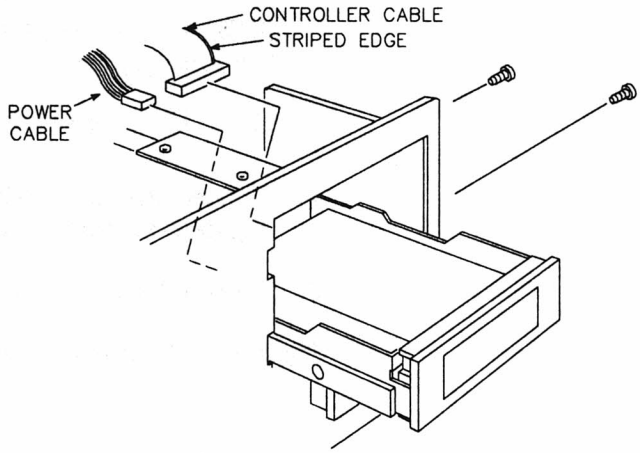

7. Connect the disk drive power and controller cables.

8. Remove the plastic cover from the drive slot for the new drive, as shown in Figure 2-27.

9. Replace the cover.

10. Power up the computer, enter the Setup program, and make the appropriate hardware configuration changes, as described in the computer owner's manual.

SCSI Module and Port Board

Notice: Use static precautions.

A SCSI interface may be added to the computer as described in the following steps:

1. Remove the cover.
2. Refer to Figure 2-31 and connect the SCSI module to the backplane board.
3. Use one screw to attach the SCSI module to the center support bar.

Figure 2-31. *Installing the SCSI Module*

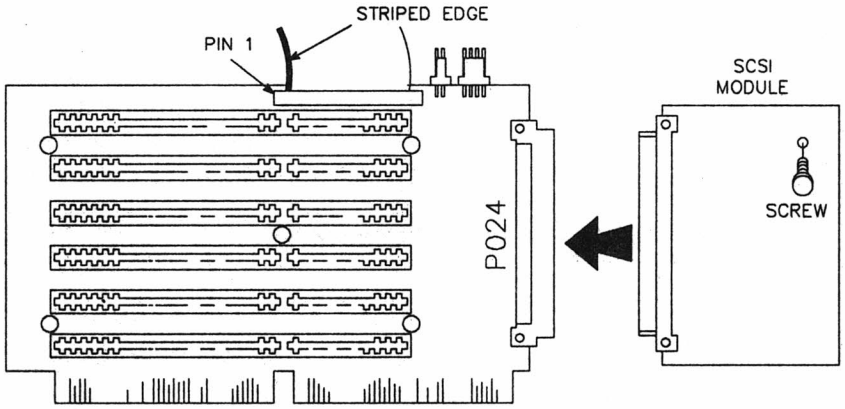

4. Connect the ribbon cable to the backplane board, as shown in Figure 2-31. Tuck the cable into the slot on the center support bar.
5. Refer to Figure 2-32 and remove the SCSI port cover plate.

Figure 2-32. *Removing the SCSI Port Cover Plate*

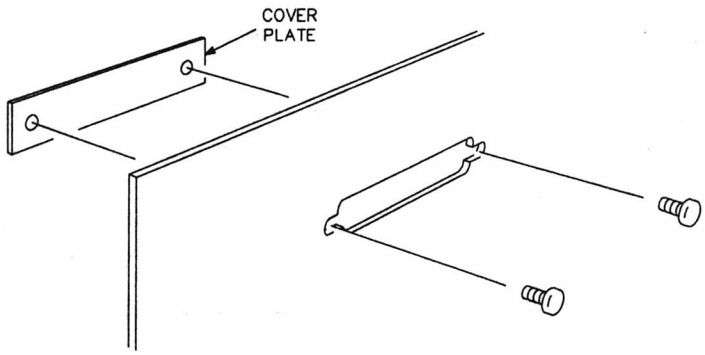

6. Install the SCSI port board, as shown in Figure 2-33.

Figure 2-33. *Installing the SCSI Port Board*

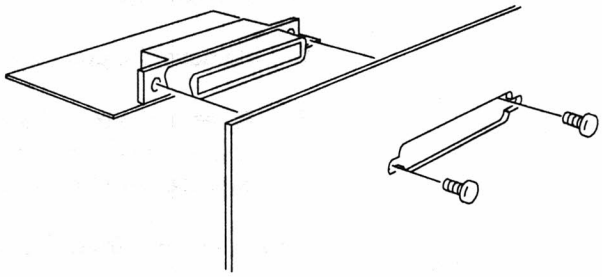

7. Connect the SCSI ribbon cable from the backplane board to P011 on the SCSI port board, as shown in Figure 2-34.

Figure 2-34. *Connecting the SCSI Cable*

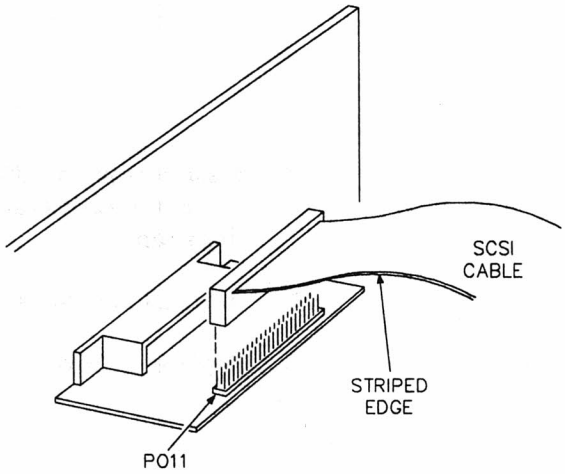

8. Replace the cover.

80387SX Numeric Coprocessor

Notice: Use static precautions.

1. Remove the cover.
2. Remove the processor module.
3. Refer to Figure 2-35 and align the flat corner of the coprocessor with the flat corner of the coprocessor socket. Gently push the coprocessor into the socket.

Figure 2-35. *Installing a Numeric Coprocessor*

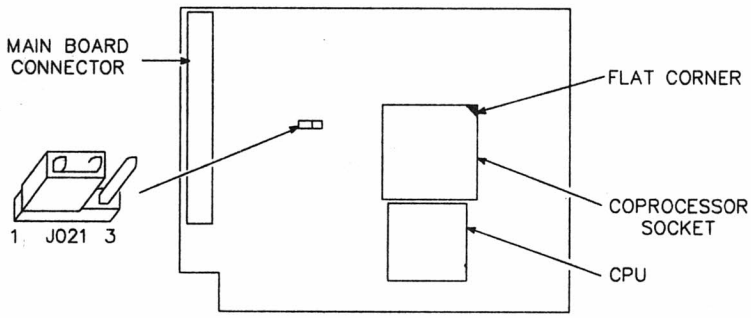

4. Make sure jumper J021 is jumpered across pins 1 and 2. Refer to the Specifications at the end of this manual for information about this jumper.
5. Reinstall the processor module.
6. Replace the cover.

Chapter 3

Troubleshooting

This chapter provides troubleshooting procedures to diagnose problems to the major assembly level.

Preliminary Checks

Remove the cover and look for the following:

Damage — to the circuit cards or chassis parts including:

- Dented or bent metal parts
- Frayed, nicked, or cut cables
- Visible cracks on circuit cards
- Heat damage — (discoloration or melting)
- Connector pins that are bent or touching broken socket connectors

Configuration — Make certain that switches and jumpers on each card are properly configured (refer to the Specifications at the end of this manual).

Placement — Check that all cards are properly seated in the bus connectors.

Connections — Check all cable connections. Make certain each cable is positioned and connected properly. Make sure power and external connections are secure.

Optional cards — Remove any optional card(s) that is not part of the base computer configuration.

Powerup

At powerup, the computer begins an initialization process to check internal circuits and components. If the computer encounters a problem during this process, an error message appears on the monitor screen (refer to "Power-Up and Error Messages" in this chapter). Some initialization actions produce a visual or audible signal. The following events should occur when power is applied to the computer:

1. The power supply and auxiliary fans start.
2. The keyboard is reset, status LEDs blink, and the NUM LOCK LED remains lit.
3. Disk drives initialize (access indicators light, heads seek).
4. Prompt appears on the monitor display.
5. Internal power-up self-tests run.
6. Computer attempts to autoboot.

Diagnostic LEDs

The diagnostic LEDs are located on the main board near the power connector. All of the LEDs turn on when you power up the computer, then turn off in sequence as circuits pass their power-up tests. Figure 3-1 illustrates the diagnostic LEDs.

Figure 3-1. *Diagnostic LEDs*

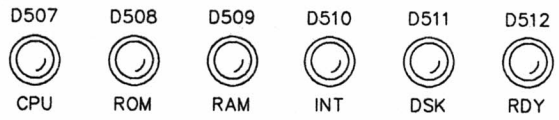

The LEDs provide an indication of the power-up initialization test status. Table 3-1 lists the circuits initialized and tested for each LED that turns off during the power-up test sequence.

Table 3-1. *Power-up Test Status*

LED Display	Test Status
011111	Video circuits initialized to a known state, BIOS is converted to slushware memory, CPU passed register test.
001111	ROM passed checksum test.
000111	SCP passed reset test, CMOS RAM passed test, and the first and last 64K of system RAM passed read/write test.
000011	Keyboard did not send an error, interrupt controller and the programmable interval timer passed test.
000001	Floppy disk controller passed test, floppy disk drive passed initialization, peripheral devices polled, RTC initialized. Computer is ready to boot a system.
000000	Computer has booted a system.

The diagnostic LEDs are used in the troubleshooting charts that follow to assist in repairing the computer.

Troubleshooting Charts

The following charts are organized to simplify the troubleshooting process. Start with the General System Troubleshooting Chart, Figure 3-2. This chart provides immediate repair recommendations, or directs you to other, more detailed charts. These charts identify the faulty assembly or recommend further tests to isolate the problem. Follow the sequence through until you locate and repair the problem.

Each block in the chart represents a step in troubleshooting the computer. Some blocks contain a smaller numbered block. The smaller block is a reference to the notes that appear on the troubleshooting charts.

Figure 3-2. *General System Troubleshooting Chart*

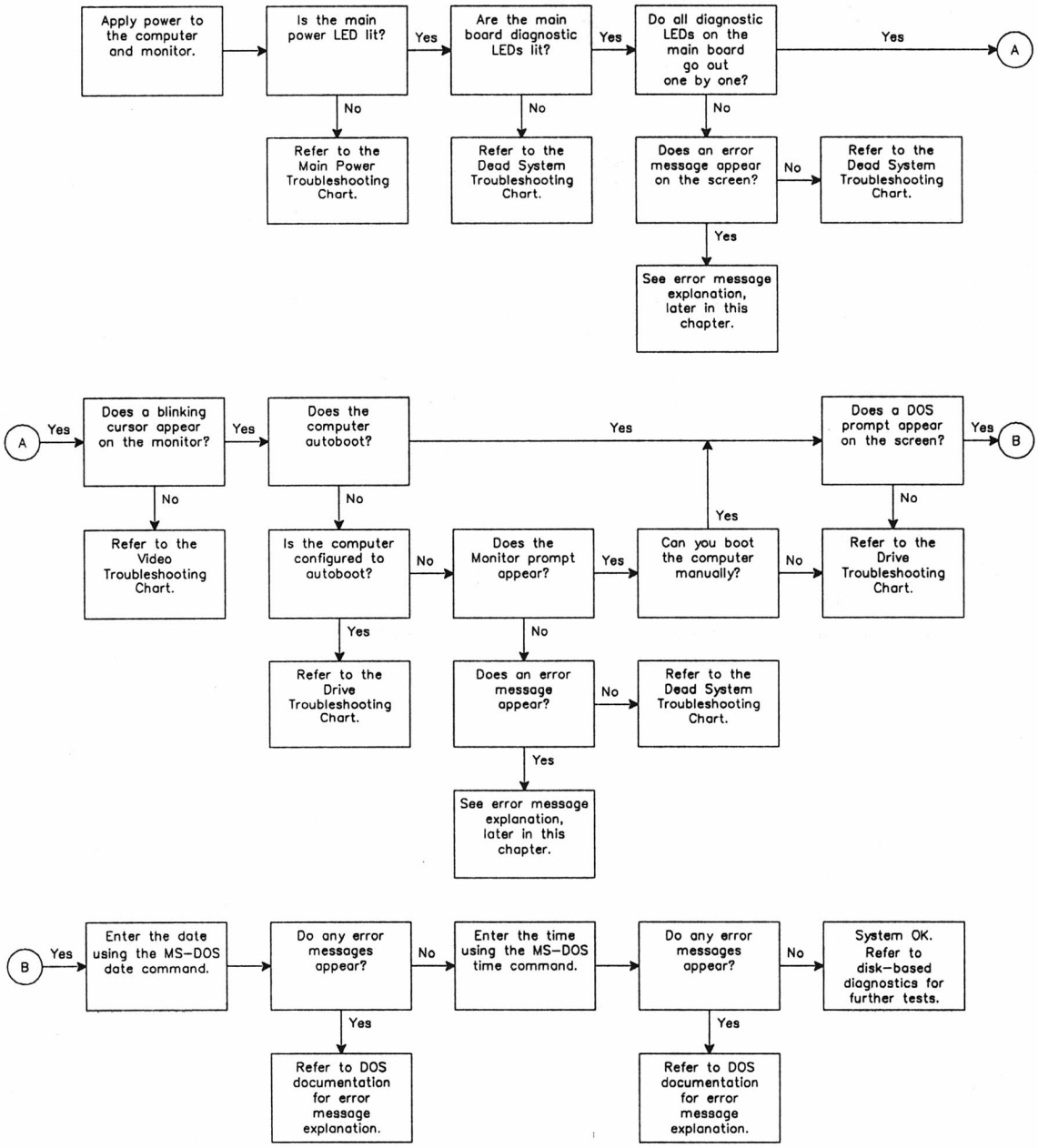

Figure 3-3. *Dead System Troubleshooting Chart*

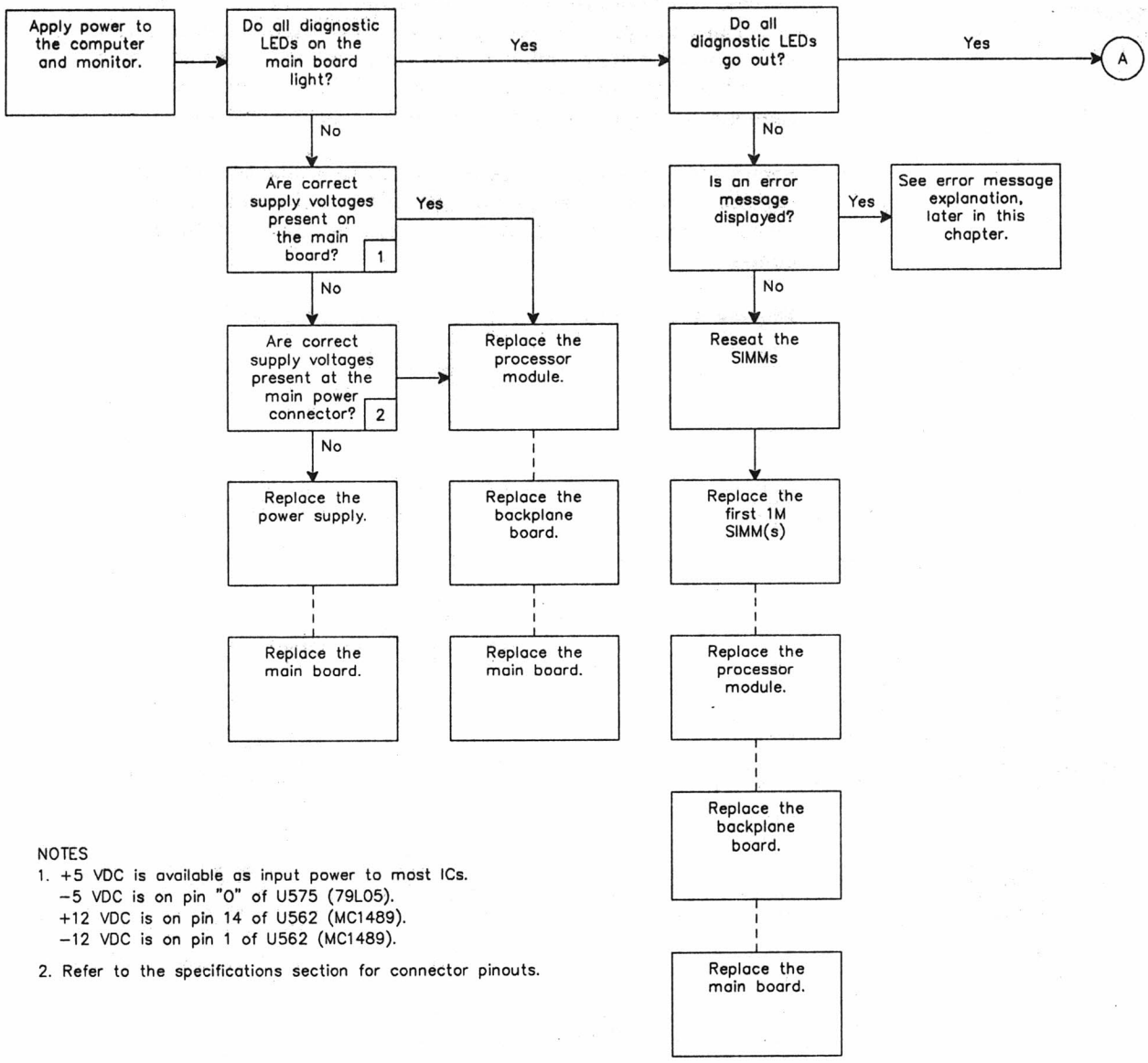

NOTES

1. +5 VDC is available as input power to most ICs.
   −5 VDC is on pin "O" of U575 (79L05).
   +12 VDC is on pin 14 of U562 (MC1489).
   −12 VDC is on pin 1 of U562 (MC1489).
2. Refer to the specifications section for connector pinouts.

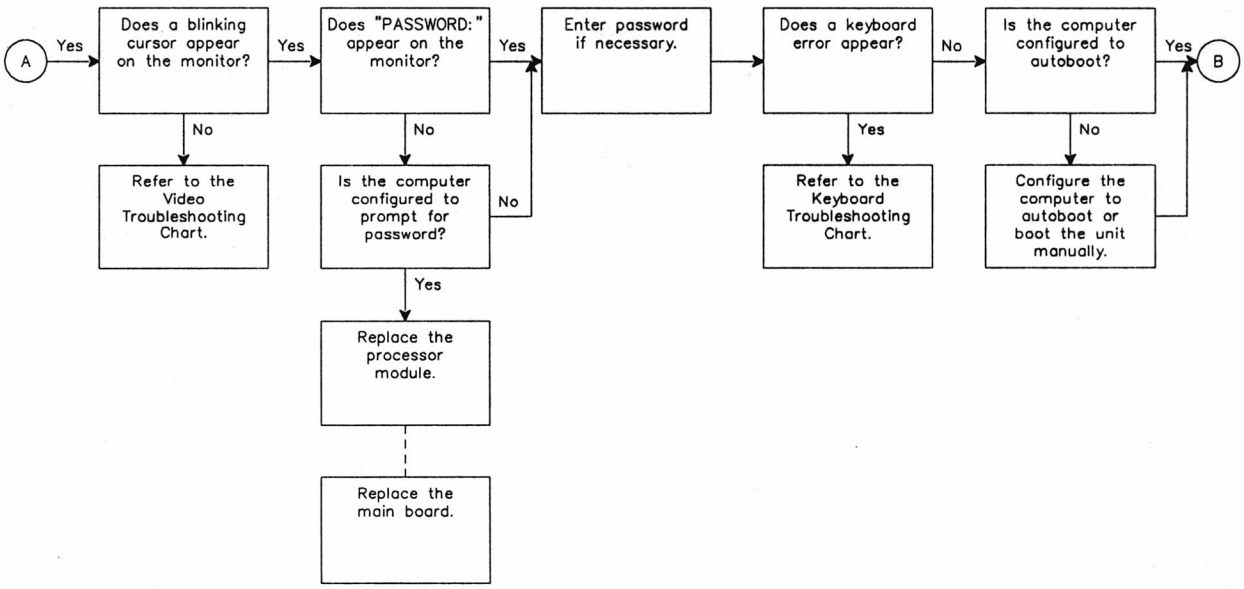
A
Yes
Does a blinking cursor appear on the monitor?
Yes
Does "PASSWORD:" appear on the monitor?
Yes
Enter password if necessary.
Does a keyboard error appear?
No
Is the computer configured to autoboot?
Yes
B
No
Refer to the Video Troubleshooting Chart.
No
Is the computer configured to prompt for password?
No
Yes
Refer to the Keyboard Troubleshooting Chart.
No
Configure the computer to autoboot or boot the unit manually.
Yes
Replace the processor module.
Replace the main board.

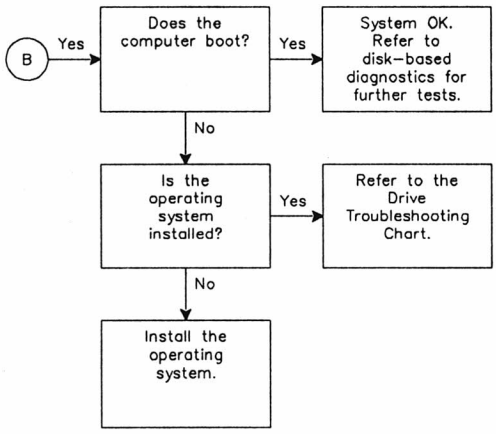
B
Yes
Does the computer boot?
Yes
System OK. Refer to disk-based diagnostics for further tests.
No
Is the operating system installed?
Yes
Refer to the Drive Troubleshooting Chart.
No
Install the operating system.

Figure 3-4. *Keyboard Troubleshooting Chart*

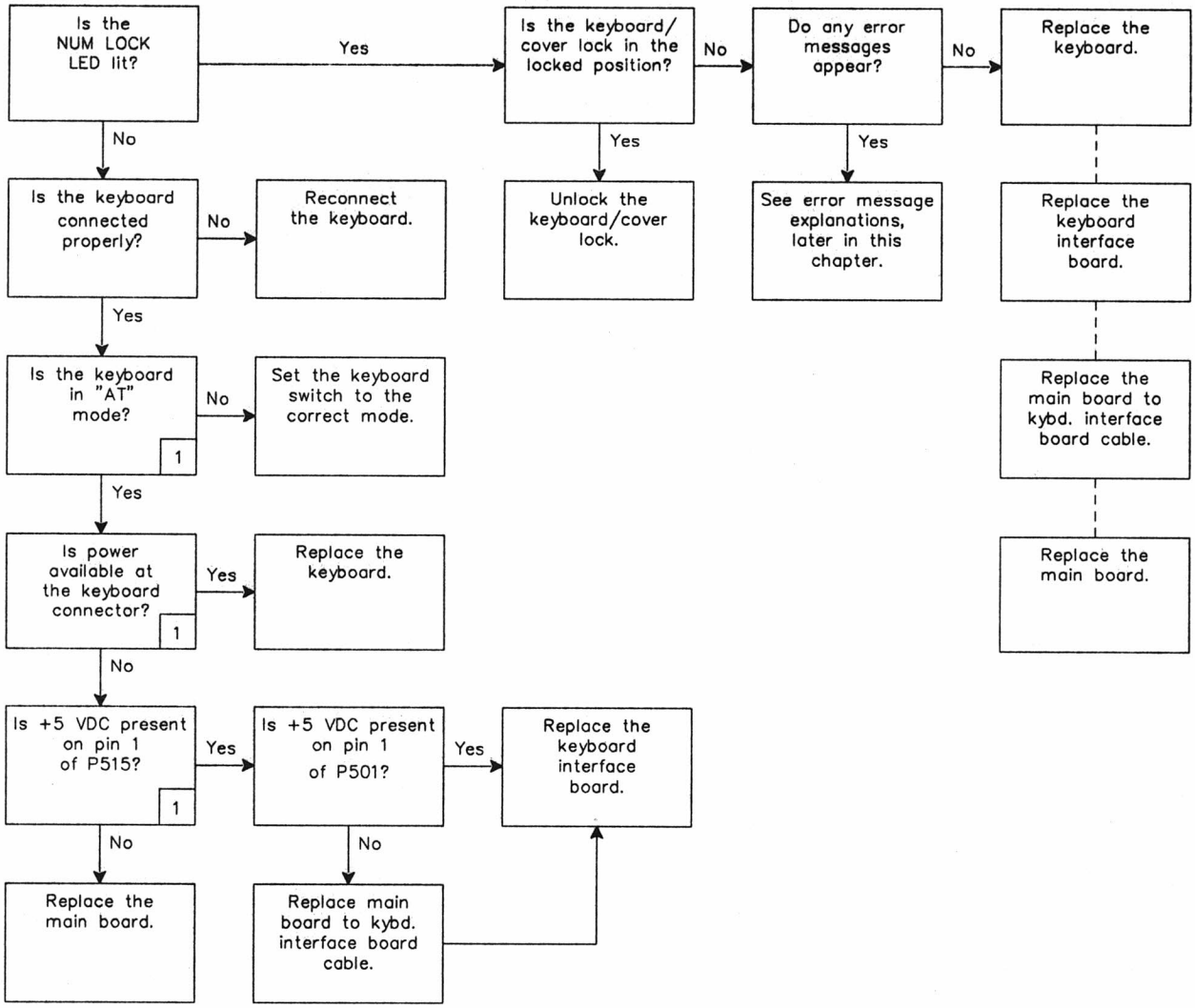

NOTE
1. Refer to the specifications section for connector pinouts and configuration information.

Figure 3-5. *Parallel/Serial Port Troubleshooting Chart*

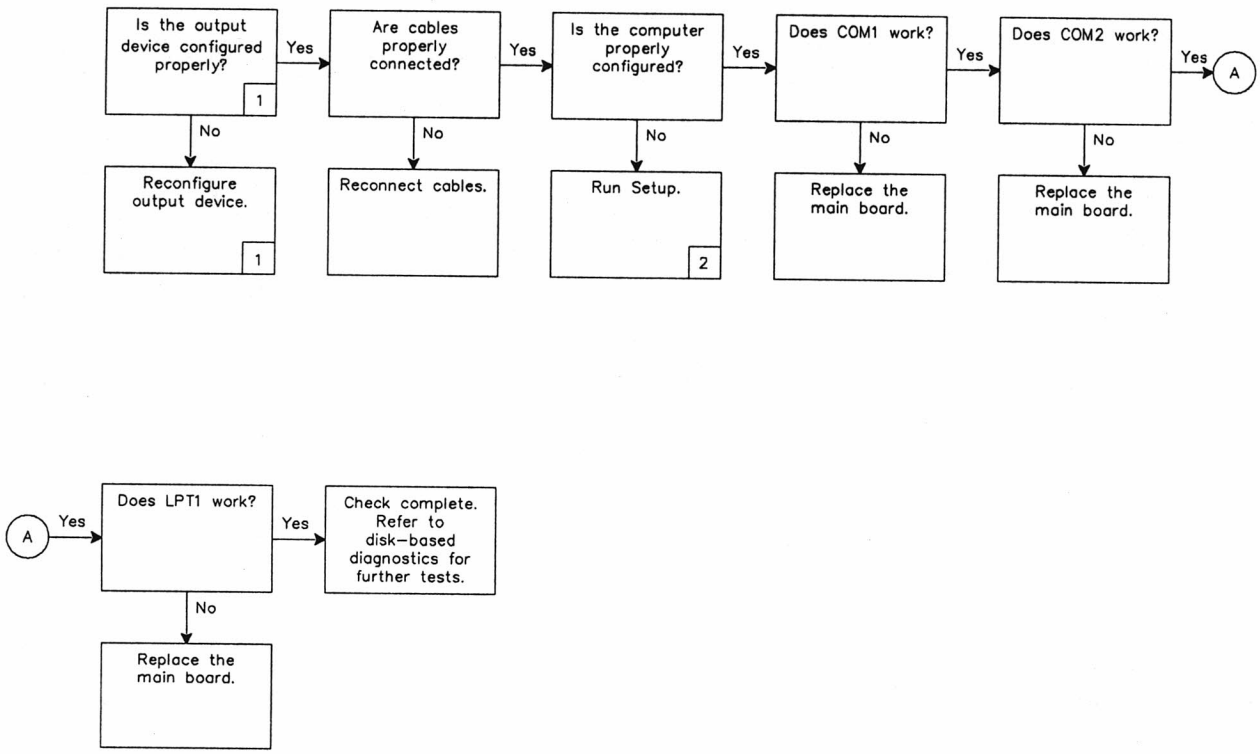

NOTES
1. Check the output device's documentation for configuration information.
2. Refer to the computer owner's manual for information about the Setup program.

Figure 3-6. *Drive Troubleshooting Chart*

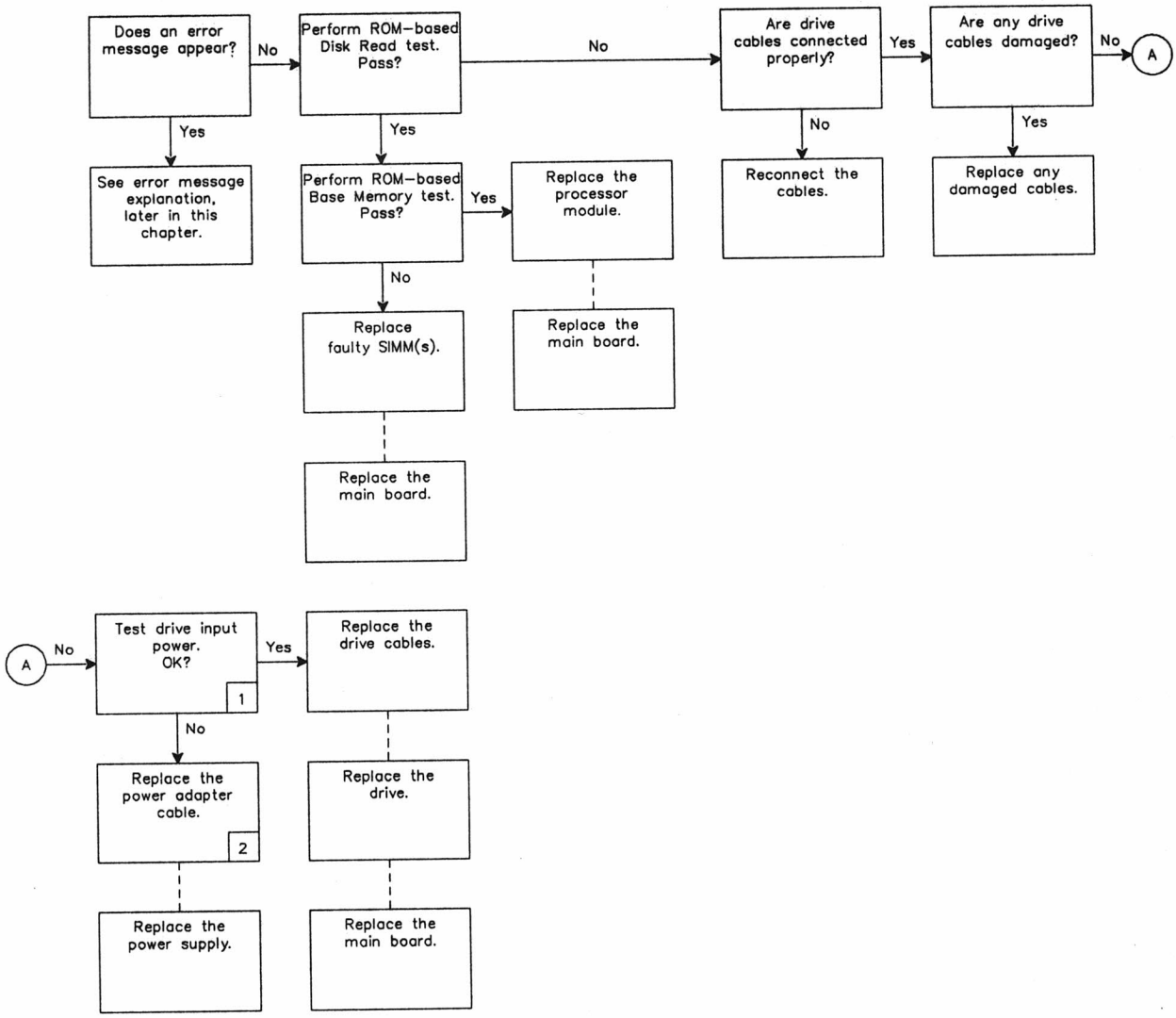

NOTES
1. Refer to the specifications section for connector pinouts.
2. Adapter cable is only used with 3.5–inch floppy disk drives.

Figure 3-7. *Video Troubleshooting Chart*

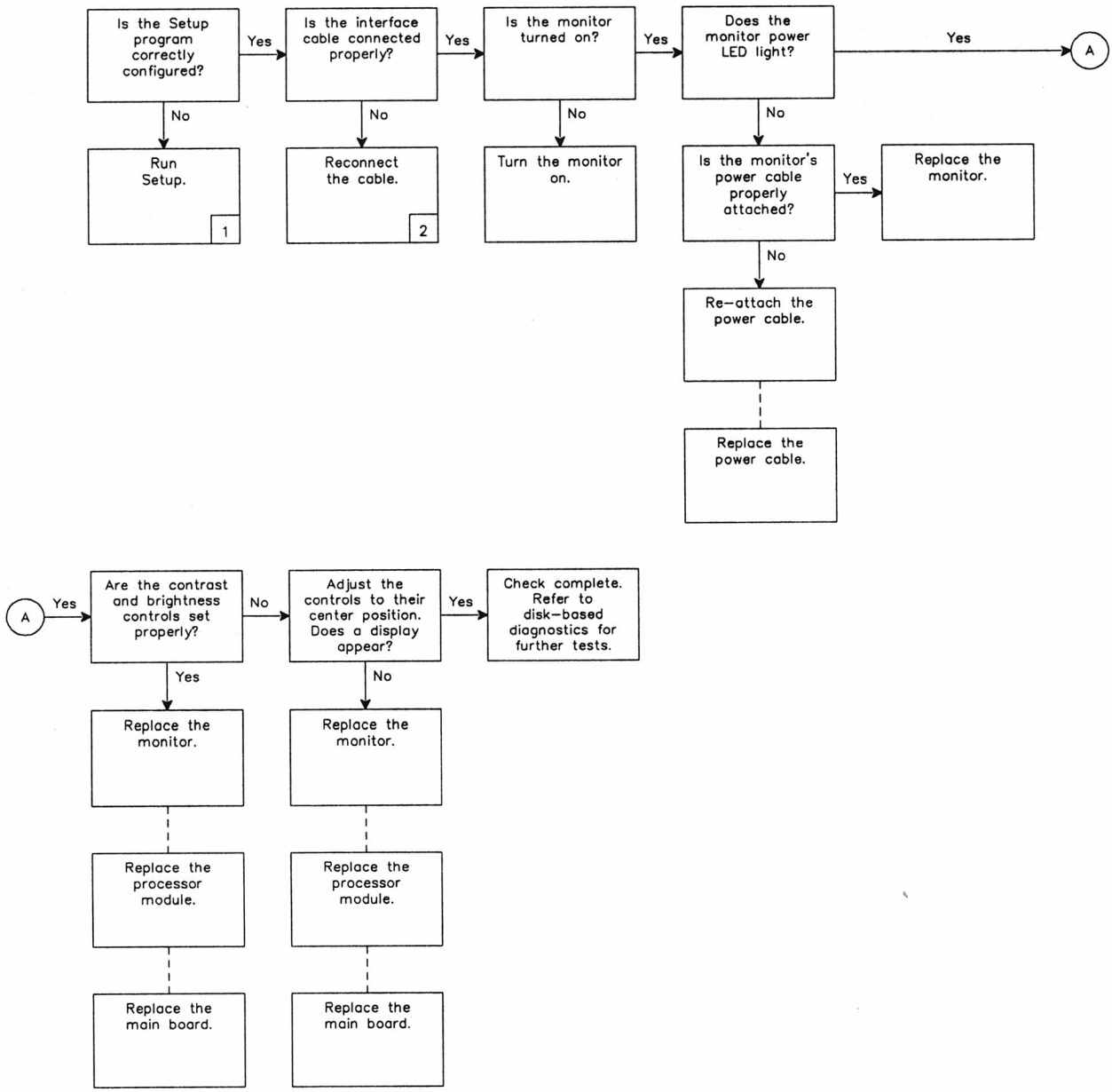

NOTES
1. Refer to the computer owner's manual for information about the Setup program.
2. On some monitors, the cable cannot be removed. Replace the monitor instead.

Figure 3-8. *Main Power Troubleshooting Chart*

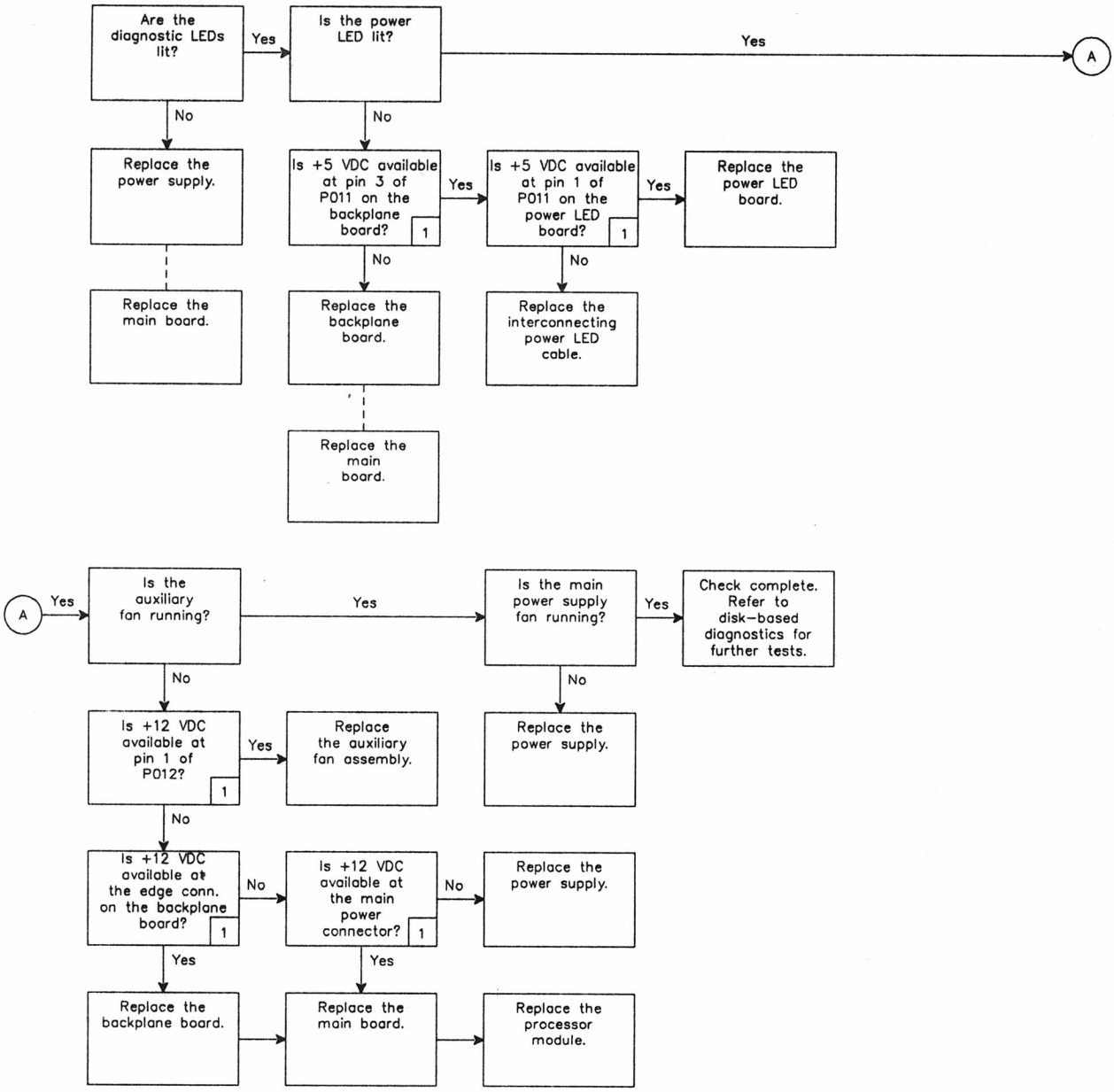

NOTE
1. Refer to the specifications section for connector pinouts.

Disk-Based Diagnostics

An optional disk-based diagnostics package (model number UT-83-A) is available for this computer. The disk-based diagnostics provide a more extensive and detailed series of tests for the computer.

Power-Up and Error Messages

If the computer encounters any problems during self-tests or powerup, it displays a message on the monitor. The error messages are listed in alphabetical order, along with descriptions of the probable cause(s), and corrective action.

Bad configuration information found in CMOS!

This message normally appears after backup battery replacement. At other times, it may indicate a backup battery failure. The message "Errors found! Please press <<Esc>> to continue" also appears at the bottom of the screen.

Corrective steps:

- Use the Setup program to reenter the configuration information.
- Refer to Chapter 2 and replace the backup battery.

Bad disk controller!

This message occurs if a disk drive cable is damaged or not securely connected, or if a hardware failure occurs.

Corrective steps:

- Inspect the disk drive power and data cables for nicks or damage.
- Make certain all cables are properly connected.
- Use the ROM-based disk read test to determine whether the drive or the main board is at fault. Replace the failing unit.

Base memory size error: SETUP: XXXK ACTUAL: XXXK

The amount of base memory specified in the Setup program does not agree with the amount of base memory identified during power-up. The message can also indicate a faulty or improperly installed SIMM.

Corrective steps:

- Use the Setup program to verify the correct base memory size.
- Inspect the SIMMs for proper installation.

- Use the ROM-based base memory test to check base memory. If the message is repeated, use the disk-based diagnostics for more extensive tests. If the computer does not boot, replace the first SIMM and try again. If the tests identify a faulty SIMM, replace it. If the tests identify a CMOS RAM failure, or a problem with the Monitor ROM, replace the main board.

Cannot reset drive!

The disk is not properly installed in the drive, the drive door/latch is not closed, or a hardware failure occurred.

Corrective steps:

- Check the floppy disk for proper installation.
- Make sure the drive door is fully closed.
- Replace the drive or the main board.

CMOS memory failure!

The internal CMOS memory failed the power-up test.

Corrective steps:

- Use the Setup program and verify the configuration information.
- Replace the main board.

CPU failure!

Either the CPU or supporting circuitry suffered a hardware failure.

Corrective steps:

- Replace the processor module.
- Replace the main board.

CRC error!

This message indicates a faulty disk, a hardware failure, or a loose or faulty drive cable. The problem could also be the main board or the SCSI module.

Corrective steps:

- Try another disk, if the problem disappears, the disk is bad. Copy any readable files to a good disk and reformat the faulty disk. If bad sectors are reported, discard the disk.

- If more than one disk drive is installed in the computer, try the other disk drive. If the second disk drive works, replace the first drive.
- Inspect all disk drive power and controller cables for nicks or damage.
- Inspect all cables for proper installation.
- Replace the drive controller cable.
- If the problem is occurring with a SCSI drive, four options are available:
  - Replace the SCSI module.
  - Replace the SCSI port board.
  - Replace the SCSI port-board-to-backplane-board ribbon cable.
  - Replace the backplane board.
- Replace the main board.

Data Corrected!

The computer detected an error, but was able to correct the data.

Corrective steps:

- If this message occurs on a regular basis, refer to "CRC error."
- Use disk-based diagnostics to test the drive.
- Replace the faulty drive.

Disk not bootable!

The computer attempted to boot an unformatted or non-system disk, or the disk is not usable.

Corrective steps:

- Make certain that the disk is bootable. If not, reformat the disk and install the operating system.
- For a hard disk drive, first try to reinstall the operating system. If necessary, back up the drive and use PREP to reinitialize the disk. Reformat the drive and install the operating system.
- Replace the faulty drive.

Divide by zero!

The power-up self-tests failed or a software failure occurred. This message can also appear if you quickly turn the computer off and back on.

Corrective steps:

- Turn the computer off, wait 15 seconds, and turn it back on. If the message reappears, replace the main board.
- Try another copy of the software, or have the customer contact the software manufacturer or dealer to report the problem. Unless this message occurs during the power-up sequence, the problem is likely the software.
- Replace the processor module.

DMA overrun!

The problem is caused by a DMA hardware failure.

Corrective steps:

- Replace the main board.
- Replace the processor module.
- If the problem is occurring with a SCSI drive, four options are available:
  - Replace the SCSI module.
  - Replace the SCSI port board.
  - Replace the SCSI port-board-to-backplane-board ribbon cable.
  - Replace the backplane board.
- Replace the faulty drive.

Drive not ready!

There is no disk in the floppy drive, the disk is not fully inserted, or a drive hardware failure occurred. The message also appears if the computer attempts to access a non-existent disk drive.

Corrective steps:

- Verify that the correct drive was specified.
- Make certain the disk is fully inserted in the drive and the door is closed and latched.

- Replace the drive controller cable.
- If the problem is occurring with a SCSI drive, four options are available:
  - Replace the SCSI module.
  - Replace the SCSI port board.
  - Replace the SCSI port-board-to-backplane-board ribbon cable.
  - Replace the backplane board.
- Replace the faulty drive.

Errors found. Please unlock keyboard and press ESC to continue.

The computer was powered up with the keyboard locked (mechanically or by software).

Corrective steps:

- Unlock the keyboard/cover lock.
- Make sure the keyboard/cover lock cables are connected properly.
- Inspect the keyboard/cover lock cables for damage.
- Replace the keyboard/cover lock assembly.
- Replace the main board.

Extended memory size error! SETUP: XXXK ACTUAL: XXXXK

The amount of extended memory specified in the Setup program does not agree with the amount of extended memory identified during powerup. A faulty or improperly installed SIMM can create this problem.

Corrective steps:

- Use the Setup program to verify the memory size entry.
- Inspect all SIMMs and memory cards for proper installation.
- Use the ROM-based extended memory test to check extended memory.

- Use the disk-based diagnostics to test extended memory. If you cannot boot the computer, replace the first SIMM and try again. If the tests identify a faulty SIMM, replace it. If the problem is on a memory expansion card, replace the indicated SIMM, or the card.

- Replace the backplane board.

- Replace the processor module.

- Replace the main board.

Fatal Error; cannot continue.

This message only appears immediately following another error message. The first message indicates the error that halted operation.

Corrective steps:

- Refer to the first error message and follow the instructions to resolve the problem.

Invalid address mark!

This message appears if the floppy disk is damaged or has not been properly formatted.

Corrective steps:

- Copy any readable files to another disk and reformat the faulty disk. If bad sectors are reported, discard the disk.

- Replace the floppy disk drive causing the error.

- If the problem is occurring with a SCSI drive, four options are available:

  - Replace the SCSI module.

  - Replace the SCSI port board.

  - Replace the SCSI port-board-to-backplane-board ribbon cable.

  - Replace the backplane board.

- If the problem is a hard disk, three options are available:

  - Reformat the hard drive.

  - Run PREP, then reformat the hard drive.

  - Replace the hard disk drive.

- Replace the main board.

Invalid command!

Some internal process (usually math-related) created an illegal processor state. Otherwise, a hardware failure occurred. This error also occurs when an illegal command is entered.

Corrective steps:

- Reenter the command.
- Try another copy of the software or have the customer contact the software manufacturer or dealer to report the problem.
- Replace the processor module.
- Replace the main board.

Invalid data read!

The floppy disk is damaged or was not properly formatted.

Corrective steps:

- Copy any readable files to another disk and format the faulty disk. If bad sectors are reported, discard the disk.
- If the problem is occurring with a SCSI drive, four options are available:
  - Replace the SCSI module.
  - Replace the SCSI port board.
  - Replace the SCSI port-board-to-backplane-board ribbon cable.
  - Replace the backplane board.
- Replace the drive.
- Replace the main board.

Invalid date.

The date was entered incorrectly, or the real-time clock failed.

Corrective steps:

- Use the Setup program to re-enter the date information.
- Replace the main board.

Invalid time.

The time was entered incorrectly, or the real-time clock failed.

Corrective steps:

- Use the Setup program to re-enter the time information.
- Replace the main board.

Keyboard not responding or not connected!

The keyboard is not properly connected, or the cable is damaged, or peripheral devices that have their own power supplies are interfering with the power-up sequence.

Corrective steps:

- Verify the keyboard is properly connected.
- Power down all peripherals. Wait one minute, power up the computer and then power up the peripherals.
- Replace the keyboard.
- Replace the keyboard interface board.
- Replace the main board.

Memory parity failure!

The power-up tests detected a memory parity failure.

Corrective steps:

- Inspect all SIMMs and circuit cards for proper installation.
- Use the ROM-based base memory test to check memory.
- Use the ROM-based extended memory test to check memory. If these tests reveal the same message, use the disk-based diagnostics to run more extensive tests. If the computer does not boot, replace the first SIMM and try again. If the tests identify a faulty SIMM, replace it.
- Replace the backplane board.
- Replace the main board.

Must run SETUP to boot from Winchester!

The Setup program contains the wrong hard disk drive configuration information.

Corrective steps:

- Use the Setup program to specify the correct hard disk drive type for the boot drive.
- Replace the main board.
- If the problem is occurring with a SCSI drive, four options are available:
  - Replace the SCSI module.
  - Replace the SCSI port board.
  - Replace the SCSI port-board-to-backplane-board ribbon cable.
  - Replace the backplane board.
- Replace the hard disk drive.

No bootable partitions

The computer attempted to boot from an unformatted partition on the hard disk drive. This message is normal the first time a hard disk system is powered up.

Corrective steps:

- Make certain a valid partition is selected to boot from.
- Format the partition and install the operating system. Refer to the operating system documentation for instructions.
- If the problem is occurring with a SCSI drive, four options are available:
  - Replace the SCSI module.
  - Replace the SCSI port board.
  - Replace the SCSI port-board-to-backplane-board ribbon cable.
  - Replace the backplane board.
- Replace the hard disk drive.
- Replace the main board.

Non-system disk

The computer attempted to boot from a formatted disk or partition without an operating system.

Corrective steps:

- Make certain a valid drive is selected for the boot operation.
- Install the operating system. Refer to the operating system documentation for instructions.
- If the problem is occurring with a SCSI drive, four options are available:
  - Replace the SCSI module.
  - Replace the SCSI port board.
  - Replace the SCSI port-board-to-backplane-board ribbon cable.
  - Replace the backplane board.
- Replace the faulty drive.
- Replace the main board.

Non-maskable interrupt received!

This message warns of an impending power failure. Either the AC power supply has failed (blown fuse or circuit breaker), or the supply has dropped below acceptable operating levels (brownout). The message also appears if a software program issues an undefined interrupt. Certain machine language commands entered from the Monitor program can also cause this error.

Corrective steps:

- Turn the computer off. If the AC supply is at fault, do not restore power to the computer until the problem is resolved.
- If a software problem is suspected, have the customer contact the software manufacturer for assistance.
- Replace the power supply.
- Replace the main board.

Not a bootable partition

The computer attempted to boot an unformatted partition on the hard disk drive.

Corrective steps:

- Make certain a valid partition is selected for the boot operation.
- Format the partition and install the operating system. Refer to the operating system documentation for instructions.
- If the problem is occurring with a SCSI drive, four options are available:
  - Replace the SCSI module.
  - Replace the SCSI port board.
  - Replace the SCSI port-board-to-backplane-board ribbon cable.
  - Replace the backplane board.
- Replace the hard disk drive.
- Replace the main board.

Overflow!

This message appears if a power-up self-test failed, or if the computer is turned off then back on very quickly. This problem can also be software related.

Corrective steps:

- Try another copy of the program or have the customer contact the software manufacturer or dealer to report the problem.
- Unless this message occurs during the power-up sequence, the problem is probably software related. Otherwise, turn the computer off, wait 15 seconds, and turn it back on. If the message reappears, replace the main board.
- Replace the processor module.

Parity hardware failure! Address: XXXXX:YYYY, Chip: UXXX

This message indicates that the power-up tests detected a parity failure.

Corrective steps:

- Check the SIMMs and expansion memory cards for proper insertion.
- Reseat the SIMMs.
- Use the ROM-based base memory test to check memory. If the test reveals the same message, use the disk-based diagnostics to run more extensive tests. If the computer does not boot, replace the first SIMM and try again. If the tests identify a faulty SIMM, replace it.
- Replace the backplane board.
- Replace the main board.

Please replace the back-up battery!

This message is normal after replacing the backup battery. It can also mean the backup battery has reached the end of its useful life.

Corrective steps:

- If the battery was recently replaced, use the Setup program to enter the proper hardware configuration settings for the computer.
- Replace the backup battery.
- Replace the main board.

RAM failure! SIMM module: XXXX

The power-up tests detected a memory failure.

Corrective steps:

- Inspect all SIMMs for proper installation.
- Swap the installed SIMMs. If the problem disappears, a SIMM was not installed correctly. If the problem moves, a SIMM is defective.
- Use the ROM-based base memory test to check memory. If the tests reveal the same message, replace the SIMM indicated in the failure report. If you cannot enter the user tests, replace the SIMM.
- Replace the backplane board.
- Replace the main board.

ROM checksum failure!

The Monitor ROM failed the power-up self-test. This message may also appear if the computer is turned off and back on very quickly.

Corrective steps:

- Turn the computer off, wait 15 seconds, and turn it back on.
- Replace the processor module.
- Replace the main board.

Sector not found!

The computer attempted to access an unformatted or damaged floppy disk.

Corrective steps:

- Copy any readable files to another disk and format the faulty disk. If bad sectors are reported, discard the disk.
- If the problem is occurring with a SCSI drive, four options are available:
  - Replace the SCSI module.
  - Replace the SCSI port board.
  - Replace the SCSI port-board-to-backplane-board ribbon cable.
  - Replace the backplane board.
- Replace the faulty drive.
- Replace the main board.

Seek failure!

The computer attempted to access an unformatted or damaged floppy disk.

Corrective steps:

- Copy any readable files to another disk and format the disk. If bad sectors are reported, discard the disk.
- If the problem is occurring with a SCSI drive, four options are available:
  - Replace the SCSI module.
  - Replace the SCSI port board.

  - Replace the SCSI port-board-to-backplane-board ribbon cable.
  - Replace the backplane board.

- Replace the faulty drive.
- Replace the main board.

System control processor failure!

The system control processor failed the power-up self-test. This message may also appear if you turn the computer off, then back on very quickly.

Corrective steps:

- Turn the computer off, wait for 15 seconds, and turn it back on.
- Replace the main board.
- Replace the processor module.

Timer interrupt failure!

The interrupt controller or timing logic failed the power-up self-test. This message may also appear if you turn the computer off, then back on very quickly.

Corrective steps:

- Turn the computer off, wait 15 seconds, and turn it back on. If the message reappears, replace the main board.

Wild Hardware interrupt.

An unexpected error or memory failure occurred while running a program.

Corrective steps:

- Turn the computer off, wait 15 seconds, and turn it back on. Rerun the program.
- If the message reoccurs at the same place during the operation of a program, it may be software related. Have the customer contact the software manufacturer or dealer and report the problem.
- If the message reoccurs randomly, use the disk-based diagnostics to test the computer. Replace any faulty assemblies.
- Use the Dead System Troubleshooting Chart to correct the problem.

Wild interrupt!

An unexpected error or memory failure occurred while running a program.

Corrective steps:

- Turn the computer off, wait 15 seconds, and turn it back on. Rerun the program.
- If the message reoccurs at the same place during the operation of a program, it may be software related. Have the customer contact the software manufacturer or dealer and report the problem.
- If the message reoccurs randomly, use the disk-based diagnostics to test the computer. Replace any faulty assemblies.
- Use the Dead System Troubleshooting Chart to correct the problem.

Chapter 4

Parts List

Tables 4-1 through 4-3 lists field-replaceable parts. All part numbers are cross-referenced to the exploded views in Figures 4-1, 4-2, and 4-3.

Figure 4-1. *Exploded View — Cabinet and External Accessories*

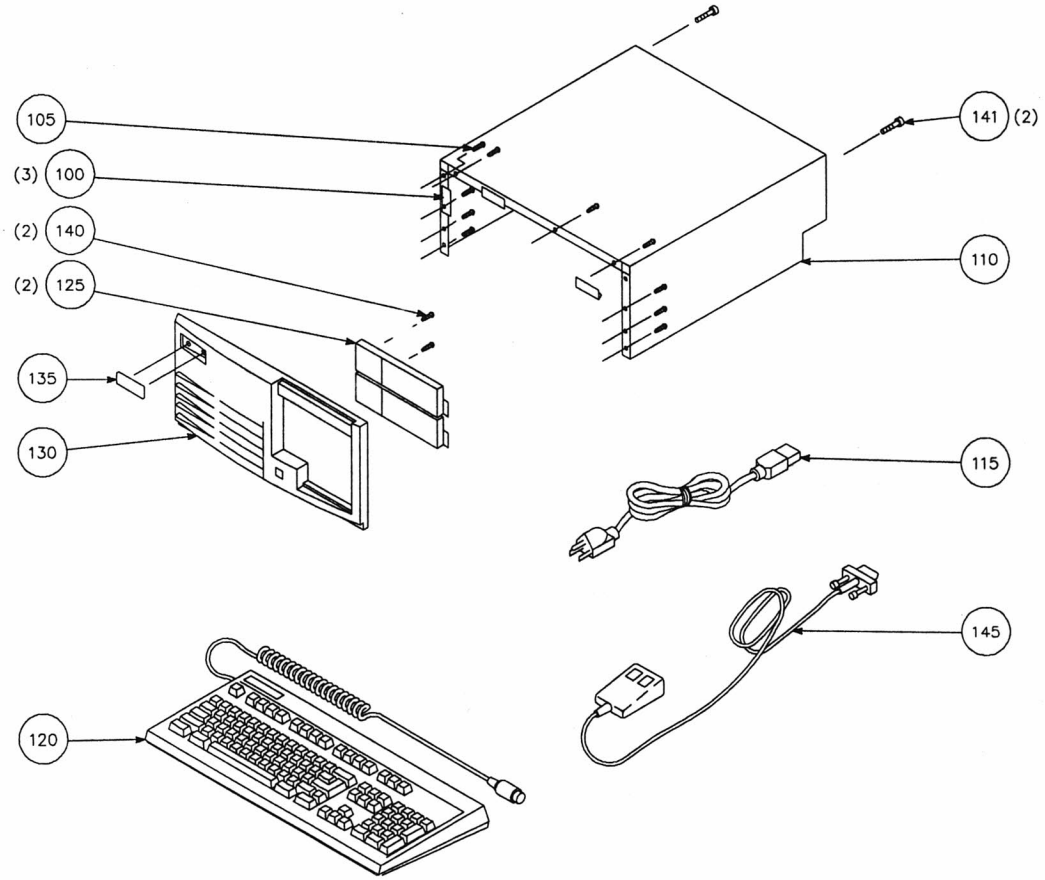

Table 4-1. *Cabinet and External Accessories*

REF NUMBER	PART NUMBER	DESCRIPTION
100	73-294	RFI shield
105	250-1593	6-AB x .250 screw, pan phillips
110	90-1420-1	Cabinet top
115	89-65	Line cord, 120 VAC
120	163-56	101-key keyboard, red LEDs
125	203-2421	Front panel plug, plastic
130	203-2420	Front panel, plastic
135	391-733	Nameplate
140	250-1556	6-BT x .375 screw, pan phillips
141	250-1650	Thumbscrews
145	150-475	Mouse, 2-button, model ID-170

Figure 4-2. *Exploded View — Chassis and Subassemblies*

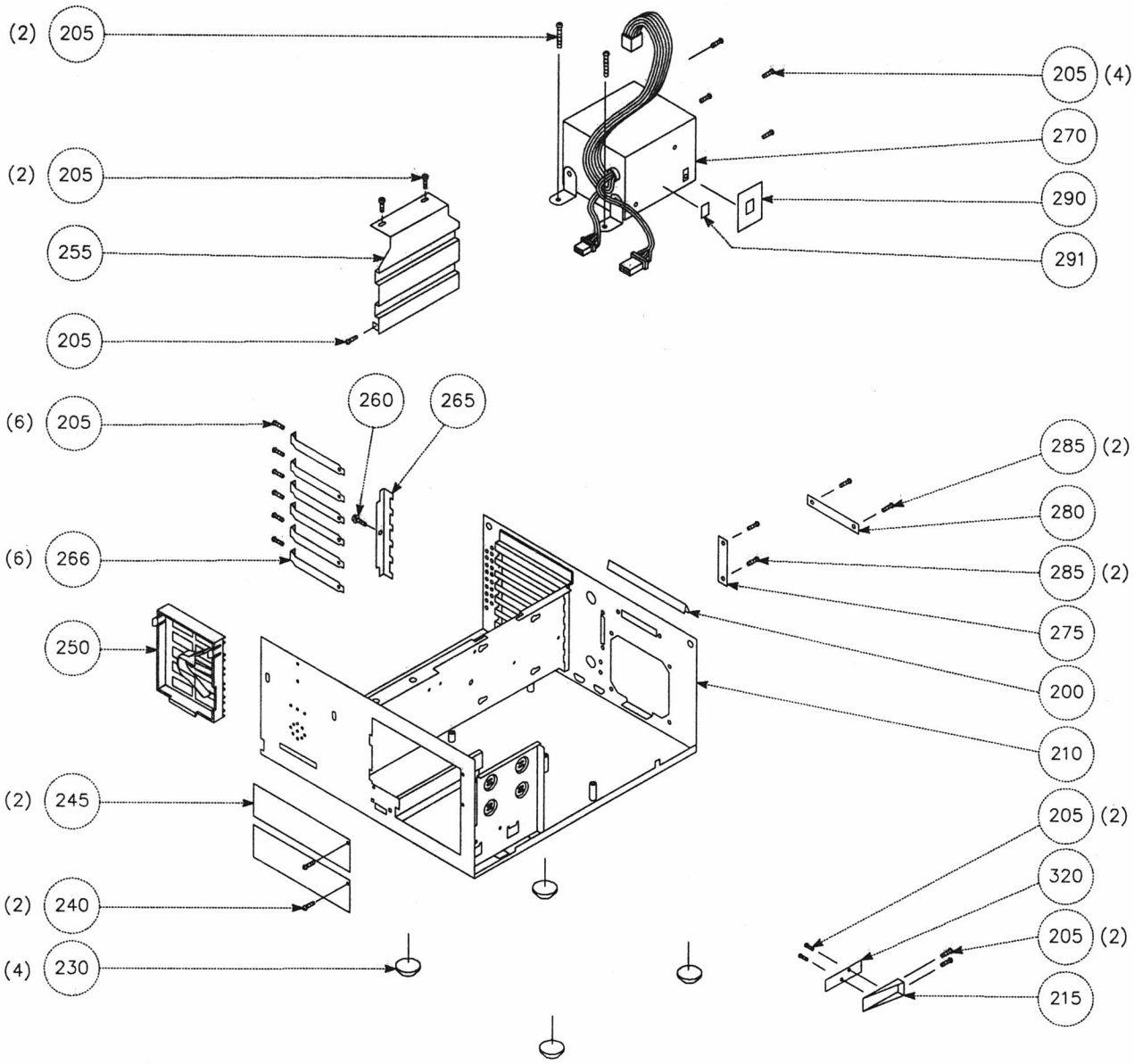

Table 4-2. *Chassis and Subassemblies*

REF NUMBER	PART NUMBER	DESCRIPTION
200	73-292	RFI shield
205	250-1538	6-32 x .250 screw, pan phillips
210	200-1636	Cabinet bottom
215	204-3244	Keyboard interface board bracket
230	261-64	Foot, round, adhesive backed
240	250-1422	6-32 x .250 screw, flat phillips
245	205-2091	Drive RFI cover plate
250	266-1366	Card guide (6 section)
255	204-3272	Left 5.25-inch drive bracket
260	250-365	6-AB x .250 screw, slot
265	258-810	Backplane RFI spring, 6-slot
266	204-2721	Blank back panel slot cover
270	234-1142	Power supply
275	205-2109	External drive plate cover
280	205-2114	SCSI cover plate
285	250-1553	4-40 x .250 screw, pan phillips
290	210-140	Power switch bezel
291	73-263	Foam gasket 1″ x .25″ x .1″

Figure 4-3. *Exploded View — Circuit Boards*

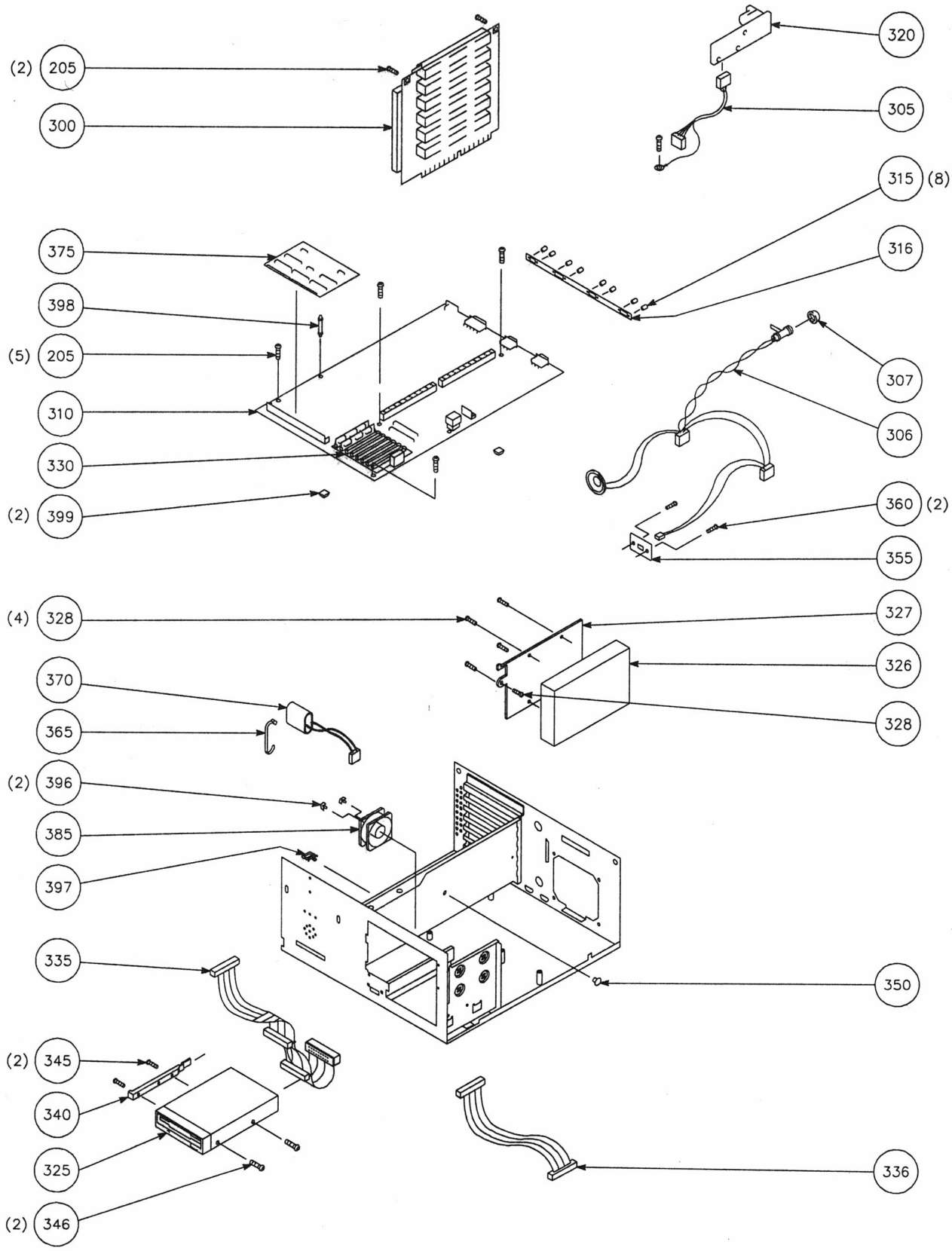

Table 4-3. *Circuit Boards and Cables*

REF NUMBER	PART NUMBER	DESCRIPTION
300	181-7815-20	Backplane board, 6-high, SCSI conn.
305	134-2245	Keyboard interface board cable
306	100-1962	Speaker/keylock assembly
307	252-826	Dress nut for keylock assembly
310	181-7899-10	Main board
315	255-757	Hex spacer
316	73-291	RFI gasket
320	181-7689-1C	Keyboard interface board
325	151-1064-E1	3.5-inch floppy disk drive, 1.4M
326	151-1065-F2	Hard disk drive, 40M
327	94-709	Hard disk drive mounting bracket
328	250-1419	6-32 x .2 screw, flat phillips
330	150-483	256K x 9 SIMM
335	134-2331	Floppy drive controller cable
336	134-2330	Hard drive interface cable, IDE
340	266-1296	Plastic drive guide
345	810-15	3 x 5 screw, flat phillips, metric
346	810-16	3 x 5 screw, pan phillips, metric
350	255-907	Plastic spacer
355	181-7769-1C	LED power indicator board
360	208-70	Clip, LED board
365	354-10	Wire tie
370	418-67	6.0V lithium battery
375	240-7796-10	Processor module board, 80386SX
385	420-670	Auxiliary fan
396	262-69	Fan pins
397	208-73	Clip, wire saddle
398	208-72	Plastic spacer
399	261-49-80	Foot, square, adhesive backed

Specifications

CPU

Processor	Intel 80386SX 16-bit external, 32-bit internal, microprocessor, 16 MHz.
Coprocessor	Intel 80387SX.

Memory

Main	256K, 512K, or 640K base memory. EMS memory up to 288K.
Expansion	Up to 7M extended memory on main board.
	Up to 7840K EMS memory on main board.
Maximum	16 megabytes.

Power Supply

Power Output	80 watts total power.
AC Input	100 to 130 VAC or 210 to 240 VAC, 50/60 Hz; auto-switching.
DC Output	+5 VDC, +12 VDC, -12 VDC.
Battery Backup	6-volt lithium or 4.5-volt alkaline battery for real-time clock and configuration information.

Input/Output

Parallel Port	
	One 25-pin Centronics-type parallel port (DB-25 connector). Configurable as LPT1, LPT2, LPT3, or disabled.
Serial Port	
	Two RS-232-C asynchronous serial ports (DB-9 connectors).
	One start bit; 7- or 8-bit word length; one or two stop bits.
Selectable Baud Rates	110, 150, 300, 600, 1200, 2400, 4800, or 9600 baud (MS-DOS® options).
	RI, CTS, DSR, DCD signals recognized. RTS and DTR control signals generated.
	Half or full-duplex operation.

Disk Drives

Floppy	
	One 3.5-inch 1.4M floppy disk drive standard, write-protection recognized.
	Optional 3.5- or 5.25-inch 360K or 1.2M.
Hard	
	One 40M or 80M Conner, vertically mounted, IDE controller.

Sound

Single channel, 8-Ω, 2-inch speaker.

Video

VGA video built into the main circuit board.

Automatically detects and emulates various display modes: MDA, HGC, CGA, EGA, and VGA.

Memory

Display	256K of video RAM.
Video Interface	16-bit (8-bit I/O).

Output

Video Output Signals	Software configurable for most types of VGA monitors.
Signal Type	Analog RGB; 0 to 0.714 V; 75-ohm impedence; zero (0) volts represents black.

Sync

Horizontal	31.49 kHz.
Vertical	40 to 70 Hz.

Resolution

Standard VGA Modes	640 x 400 in 16 colors; 640 x 480 in 16 colors; 320 x 200 in 256 colors; 360 x 400 in 16 colors; 720 x 400 in 16 colors.
Modes with Appropriate Software and Monitor	800 x 600 in 16 colors; 960 x 720 in 4 colors; 1280 x 960 in monochrome.
Colors/Shades Displayed	Depends on video display and emulation mode: Monochrome — 2 to 16 levels on gray scale. Color — Up to 256 of 262,144 colors or shades.

Environment

Operating

Temperature	60° to 95°F (15° to 35°C).
Humidity	10% to 80%.
Altitude	0 to 7000 feet (0 to 2133 m).

Memory Map

Figure S-1. *Memory Map*

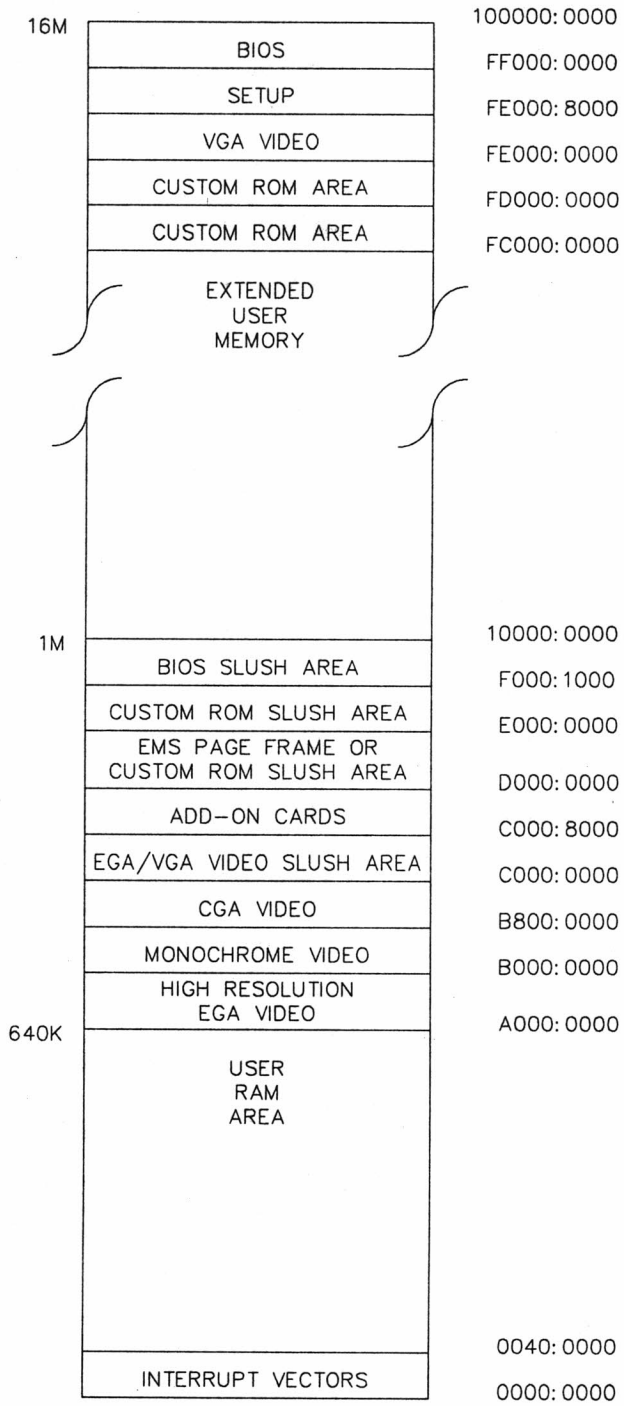

Pinout Tables

The following tables list the signals available at the various connectors in the computer.

Table S-1. *Processor Module Connector (P507)*

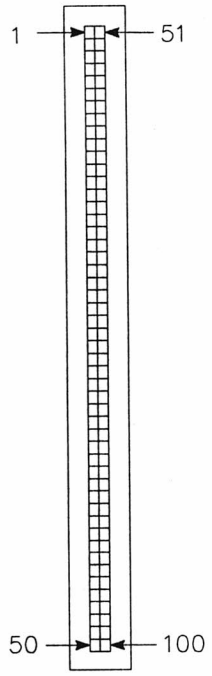

PIN	SIGNAL	PIN	SIGNAL
1	INTR	51	NPER
2	D07	52	NPBUSY
3	A10	53	GND
4	D06	54	HLDA
5	MI0	55	Vcc
6	D05	56	A15
7	CPUA20	57	A21
8	D11	58	NPRST
9	D10	59	READY
10	AF16	60	A23
11	D03	61	TYPE0
12	D09	62	NPCS
13	D01	63	TYPE2
14	D08	64	A22
15	RESET3	65	A19
16	D00	66	S1
17	NPINT	67	GND
18	REF	68	A17
19	CLKEN	69	A18
20	NMI	70	CLK2
21	GND	71	A16
22	Vcc	72	A14
23	GND	73	A00
24	Vcc	74	D13
25	GND	75	D15
26	Vcc	76	A01
27	GND	77	S0
28	Vcc	78	A02
29	GND	79	D02
30	Vcc	80	PROCCLK
31	GND	81	BHE
32	D04	82	A03
33	GND	83	PROCHOLD
34	D12	84	A04
35	GND	85	BUSY
36	NC	86	A05
37	GND	87	IOCHRDY
38	Vcc	88	A06
39	GND	89	D14
40	Vcc	90	A07
41	GND	91	DCOK
42	Vcc	92	A08
43	GND	93	XIOR
44	Vcc	94	A09
45	GND	95	TYPE1
46	Vcc	96	A11
47	NC	97	XIOW
48	XA04	98	A12
49	NC	99	XA02
50	XA01	100	A13

Table S-2. *Floppy Disk Drive Connector (P510)*

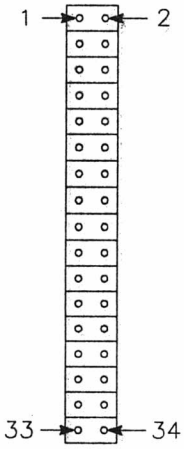

PIN	SIGNAL	PIN	SIGNAL
1	GND	18	DIR
2	SL0	19	GND
3	GND	20	STP
4	NC	21	GND
5	GND	22	WRD
6	NC	23	GND
7	GND	24	WRG
8	IND	25	GND
9	GND	26	TR0
10	MTR1	27	GND
11	GND	28	WPSA
12	DS2	29	GND
13	GND	30	RD
14	DS1	31	GND
15	GND	32	SD1
16	MTR2	33	GND
17	GND	34	DC

Table S-3. *Hard Disk Drive Connector (P511)*

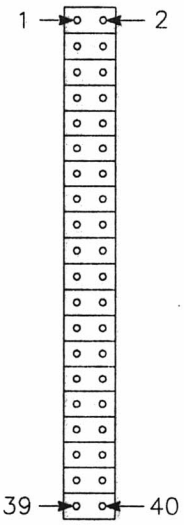

PIN	SIGNAL	PIN	SIGNAL
1	RESETDRV	21	NC
2	GND	22	GND
3	SD07	23	$\overline{IOW}$
4	SD08	24	GND
5	SD06	25	$\overline{IOR}$
6	SD09	26	GND
7	SD05	27	NC
8	SD10	28	BALE
9	SD04	29	NC
10	SD11	30	GND
11	SD03	31	DIRQ14
12	SD12	32	$\overline{IOCS16}$
13	SD02	33	SA01
14	SD13	34	GND
15	SD01	35	WA0
16	SD14	36	SA02
17	SD00	37	$\overline{HDCS0}$
18	SD15	38	$\overline{HDCS1}$
19	GND	39	Vcc
20	GND	40	GND

Table S-4. *AT Bus Connector (P508)*

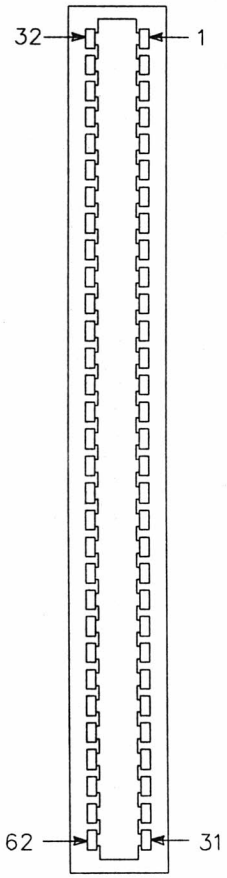

PIN	SIGNAL	PIN	SIGNAL
1	$\overline{\text{S8HE}}$	32	$\overline{\text{MEMCS16}}$
2	LA23	33	$\overline{\text{IOCS16}}$
3	LA22	34	IRQ10
4	LA21	35	IRQ11
5	LA20	36	IRQ12
6	LA19	37	IRQ15
7	LA18	38	$\overline{\text{IRQ14}}$
8	$\overline{\text{LA17}}$	39	$\overline{\text{DACK0}}$
9	$\overline{\text{MEMR}}$	40	$\overline{\text{DREQ0}}$
10	$\overline{\text{MEMW}}$	41	$\overline{\text{DACK5}}$
11	SD08	42	$\overline{\text{DREQ5}}$
12	SD09	43	$\overline{\text{DACK6}}$
13	SD10	44	$\overline{\text{DREQ6}}$
14	SD11	45	$\overline{\text{DACK7}}$
15	SD12	46	DREQ7
16	SD13	47	Vcc
17	SD14	48	$\overline{\text{MASTER}}$
18	SD15	49	GND
19	Vcc	50	Vcc
20	Vcc	51	Vcc
21	Vcc	52	Vcc
22	GND	53	GND
23	GND	54	GND
24	GND	55	GND
25	GND	56	GND
26	GND	57	GND
27	GND	58	GND
28	GND	59	GND
29	GND	60	GND
30	Vcc	61	Vcc
31	Vcc	62	Vcc

Table S-5. *PC Bus Connector (P509)*

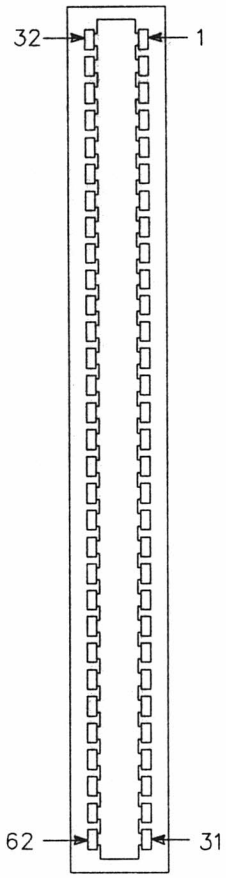

PIN	SIGNAL	PIN	SIGNAL
1	IOCHCK	32	GND
2	SD7	33	RESETDRV
3	SD6	34	+5V
4	SD5	35	IRQ9
5	SD4	36	-5V
6	SD3	37	DRQ2
7	SD2	38	-12V
8	SD1	39	0WS
9	SD0	40	+12V
10	BIOCHRDY	41	GND
11	AEN	42	SMEMW
12	SA19	43	SMEMR
13	SA18	44	IOW
14	SA17	45	IOR
15	SA16	46	DACK3
16	SA15	47	DRQ3
17	SA14	48	DACK1
18	SA13	49	DRQ1
19	SA12	50	REFRESH
20	SA11	51	CLOCK
21	SA10	52	IRQ7
22	SA9	53	IRQ6
23	SA8	54	IRQ5
24	SA7	55	IRQ4
25	SA6	56	IRQ3
26	SA5	57	DACK2
27	SA4	58	T/C
28	SA3	59	ALE
29	SA2	60	+5V
30	SA1	61	OSC
31	SA0	62	GND

Table S-6. *Video Port Connector (P503)*

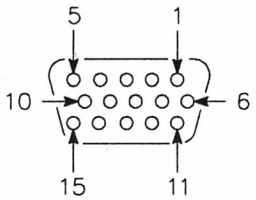

PIN	SIGNAL	PIN	SIGNAL
1	Red video	9	NC
2	Green video	10	GND
3	Blue video	11	NC
4	NC	12	NC
5	GND	13	HSYNC
6	GND	14	VSYNC
7	GND	15	NC
8	GND		

Table S-7. *Features Connector (P502)*

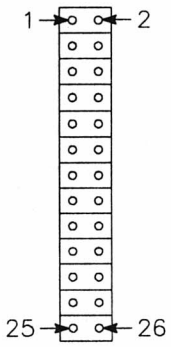

PIN	SIGNAL	PIN	SIGNAL
1	GND	14	Video data 6
2	Video data 0	15	GND
3	GND	16	Video data 7
4	Video data 1	17	GND
5	GND	18	PCLOCK
6	Video data 2	19	GND
7	ENDATA	20	BLANK
8	Video data 3	21	GND
9	ENSYNC	22	Horizontal sync
10	Video data 4	23	NC
11	ENPCLK	24	Vertical sync
12	Video data 5	25	GND
13	NC	26	NC

Table S-8. *Parallel Port Connector (P504)*

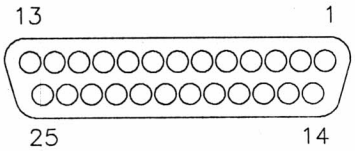

PIN	SIGNAL	PIN	SIGNAL
1	PSTROBE	14	PAUTOFD
2	Data bit 0	15	PERROR
3	Data bit 1	16	PINIT
4	Data bit 2	17	PSLCTIN
5	Data bit 3	18	GND
6	Data bit 4	19	GND
7	Data bit 5	20	GND
8	Data bit 6	21	GND
9	Data bit 7	22	GND
10	PACK	23	GND
11	PBUSY	24	GND
12	PPE (paper end)	25	GND
13	PSLCT (select)		

Table S-9. *Serial Port Connector (P505, P506)*

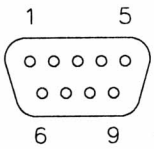

PIN	SIGNAL	DESCRIPTION
1	DCD	Carrier detect
2	RXD	Receive data
3	TXD	Transmit data
4	DTR	Data terminal ready
5	GND	Signal ground
6	DSR	Data set ready
7	RTS	Request to send
8	CTS	Clear to send
9	RI	Ring indicator
Case		Chassis ground

Table S-10. *Keyboard Connector (P501)*

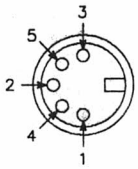

PIN	SIGNAL
1	Keyboard clock
2	Keyboard data
3	Keyboard reset
4	GND
5	+5V

Table S-11. *Main Power Connector (P514)*

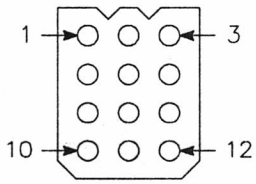

PIN	SIGNAL	WIRE COLOR
1	GND	Black
2	GND	Black
3	GND	Black
4	+5 VDC	Red
5	+5 VDC	Red
6	+5 VDC	Red
7	+12 VDC	White
8	GND	Black
9	-12 VDC	Orange
10	NC	
11	NC	
12	DCOK	Yellow

Table S-12. *Speaker/LED Connector (P512)*

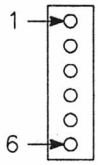

PIN	SIGNAL
1	LED +
2	Speaker -
3	Speaker +
4	NC
5	LED -
6	NC

Table S-13. *Backplane Board Power LED Connector (P011)*

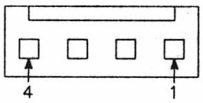

PIN	SIGNAL	WIRE COLOR
1	Ground	Black
2	+5 VDC	Blue
3	+5 VDC	Green
4	$\overline{\text{DISKLED}}$	Red

Table S-14. *LED Board Connector (P011)*

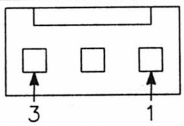

PIN	SIGNAL	WIRE COLOR
1	+5 VDC	Green
2	Ground	Black
3	$\overline{\text{DISKLED}}$	Red

Table S-15. *Auxiliary Fan Power Connector (P012)*

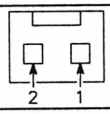

PIN	SIGNAL	FAN WIRE COLOR
1	+12 VDC	Red
2	Ground	Black

Table S-16. *Disk Drive Power Connector*

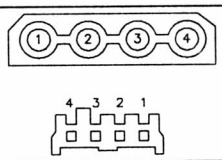

PIN	SIGNAL	WIRE COLOR
1	+12 VDC	Orange
2	Ground	Black
3	Ground	Black
4	+5 VDC	Red

SCSI Interface (SCSI drive optional; on backplane)

Table S-17. *SCSI Module Connector (P024)*

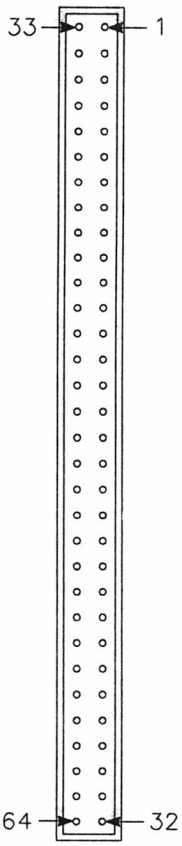

SIGNAL	DESCRIPTION	SIGNAL	DESCRIPTION
1	ALE	33	$\overline{\text{SCIO}}$
2	$\overline{\text{DREQ6}}$	34	$\overline{\text{SCREQ}}$
3	$\overline{\text{DACK6}}$	35	$\overline{\text{SCCD}}$
4	$\overline{\text{IOWR}}$	36	$\overline{\text{SCSEL}}$
5	$\overline{\text{IORD}}$	37	$\overline{\text{SCSMG}}$
6	AEN	38	$\overline{\text{SCRST}}$
7	SA9	39	$\overline{\text{SCACK}}$
8	SA8	40	$\overline{\text{SCBSY}}$
9	SA7	41	$\overline{\text{SCATN}}$
10	SA6	42	$\overline{\text{SCDP}}$
11	SA5	43	$\overline{\text{SCD7}}$
12	SA4	44	$\overline{\text{SCD6}}$
13	SA3	45	$\overline{\text{SCD5}}$
14	SA2	46	$\overline{\text{SCD4}}$
15	SA1	47	$\overline{\text{SCD3}}$
16	SA0	48	$\overline{\text{SCD2}}$
17	SD15	49	$\overline{\text{SCD1}}$
18	SD14	50	SCD0
19	SD13	51	TERMPWR
20	SD12	52	+5 VDC
21	SD11	53	+5 VDC
22	SD10	54	+5 VDC
23	SD9	55	+5 VDC
24	SD8	56	Ground
25	SD7	57	Ground
26	SD6	58	Ground
27	SD5	59	Ground
28	SD4	60	NC[1]
29	SD3	61	NC[1]
30	SD2	62	NC[1]
31	SD1	63	IRQ11
32	SD0	64	RESET

NOTE
1. No connection.

Table S-18. *SCSI Cable Connector (P025 and P011)*

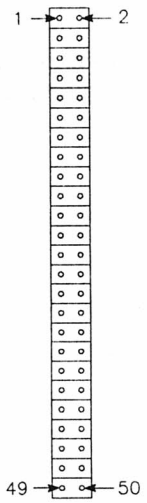

SIGNAL	DESCRIPTION	SIGNAL	DESCRIPTION
2	$\overline{\text{SCD0}}$	28	Ground
4	$\overline{\text{SCD1}}$	30	Ground
6	$\overline{\text{SCD2}}$	32	$\overline{\text{SCATN}}$
8	$\overline{\text{SCD3}}$	34	Ground
10	$\overline{\text{SCD4}}$	36	$\overline{\text{SCSBSY}}$
12	$\overline{\text{SCD5}}$	38	$\overline{\text{SCACK}}$
14	$\overline{\text{SCD6}}$	40	$\overline{\text{SCRST}}$
16	$\overline{\text{SCD7}}$	42	$\overline{\text{SCMSG}}$
18	$\overline{\text{SCDP}}$	44	$\overline{\text{SCSEL}}$
20	Ground	46	$\overline{\text{SCCD}}$
22	Ground	48	$\overline{\text{SCREQ}}$
24	Ground	50	$\overline{\text{SCIO}}$
26	TERMPWR		

NOTE
Pin 25 has no connection, all other odd-numbered pins are ground.

Table S-19. *SCSI Connector (external) (P012)*

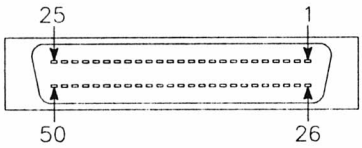

SIGNAL	DESCRIPTION	SIGNAL	DESCRIPTION
26	$\overline{\text{FSCD0}}$	39	Ground
27	$\overline{\text{FSCD1}}$	40	Ground
28	$\overline{\text{FSCD2}}$	41	$\overline{\text{FSCATN}}$
29	$\overline{\text{FSCD3}}$	42	Ground
30	$\overline{\text{FSCD4}}$	43	$\overline{\text{FSCSBSY}}$
31	$\overline{\text{FSCD5}}$	44	$\overline{\text{FSCACK}}$
32	$\overline{\text{FSCD6}}$	45	$\overline{\text{FSCRST}}$
33	$\overline{\text{FSCD7}}$	46	$\overline{\text{FSCMSG}}$
34	$\overline{\text{FSCDP}}$	47	$\overline{\text{FSCSEL}}$
35	Ground	48	$\overline{\text{FSCCD}}$
36	Ground	49	$\overline{\text{FSCREQ}}$
37	Ground	50	$\overline{\text{FSCIO}}$
38	FTERMPWR		

NOTE
Pins 1-12 and 14-25 are ground, pin 13 has no connection.

Configuration

This section describes hardware jumper settings for the computer. For information about connector pinouts, refer to the tables earlier in this chapter.

Main Board

The main board contains several jumper blocks. Figure S-2 illustrates their locations and default settings. Table S-20 describes the settings.

Figure S-2. *Main Circuit Board Jumpers*

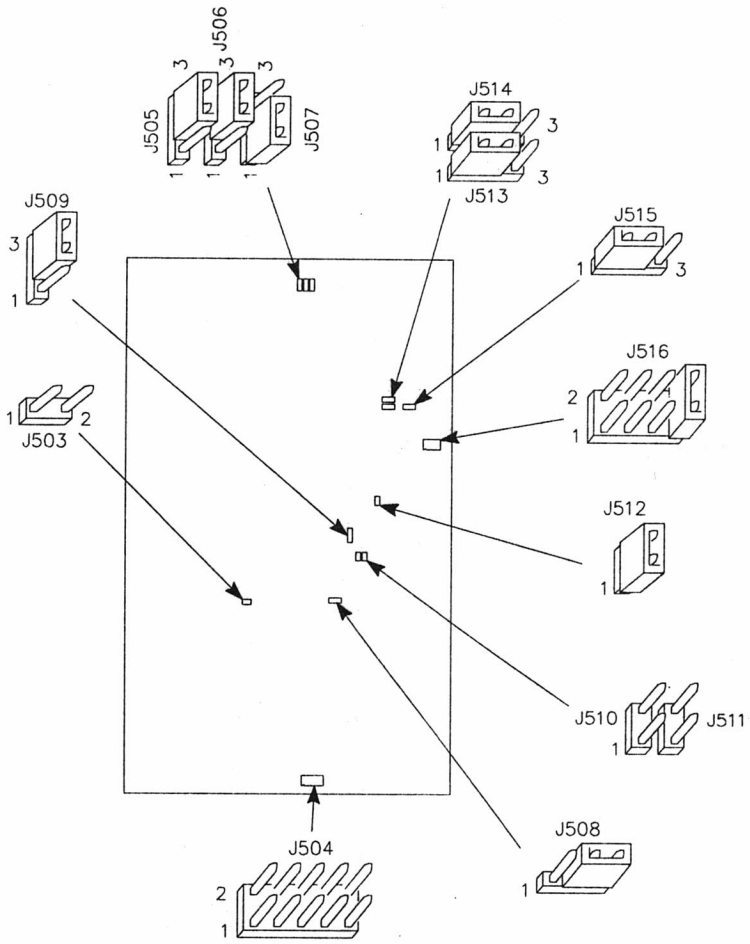

Table S-20. *Main Board Jumper Settings*

JUMPER	SETTING	DESCRIPTION	
J503	Keyboard reset		
	Enabled	On	
	Disabled	Off[1]	
J504	SCP inputs	1-2	OFF = normal, ON = page mode
		3-4	OFF = 0 WS, ON = 1 WS
		5-6	Not defined
		7-8	Not defined
		9-10	Color
		None[1]	
		Printer	Scanner
J505	Printer/scanner select	2-3[1]	1-2
J506	Printer/scanner select	2-3[1]	1-2
J507	Printer/scanner select	1-2[1]	2-3
J513	Printer/scanner select	1-2[1]	2-3
J514	Printer/scanner select	1-2[1]	2-3
J515	Printer/scanner select	1-2[1]	2-3
J508	EPROM size	1-2	32K x 8
		2-3[1]	64K x 8 or 128K x 8
J509	Hard drive type	1-2	Older Conner drives
		2-3[1]	All other hard drives
J510	Floppy precompensation	On	187 nanoseconds
		Off[1]	125 nanoseconds
J511	Floppy drive type	On	1.2M 5.25 inch
		Off[1]	No 1.2M 5.25 inch
J512	Floppy controller enable	On[1]	Enabled
		Off	Disabled
J516	82C605 ID	1-2	
		3-4	
		5-6	
		7-8[1]	

NOTE
1. Factory setting.

80386SX Processor Module

The 80386SX processor module (PCB# 85-3594-01 and 85-3666-01) contains one hardware jumper, illustrated in Figure S-3. The jumper is used for determining the reset type of a numeric coprocessor. Table S-21 describes the settings.

Figure S-3. *80386SX Processor Module Jumper Location*

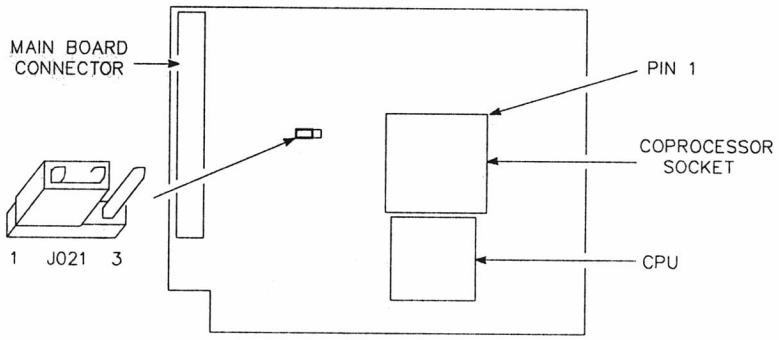

Table S-21. *80386SX Processor Module Jumper Settings*

JUMPER	DESCRIPTION	SETTING
J021	CPU can reset coprocessor	1-2[1]
	CPU cannot reset coprocessor	2-3

NOTE
1. Factory setting

Keyboard

The 101-key keyboard can be set for either XT or AT operation. Depending on the keyboard model, a switch is located beneath the logo nameplate (Figure S-4), or on the underside of the keyboard (Figure S-5). To access the switch on the top of the keyboard, use a small screwdriver to gently pry up the nameplate. The switch positions are labeled AT and XT. Position the switch in the AT position for use with this computer.

Figure S-4. *AT/XT-Compatibility Switch*

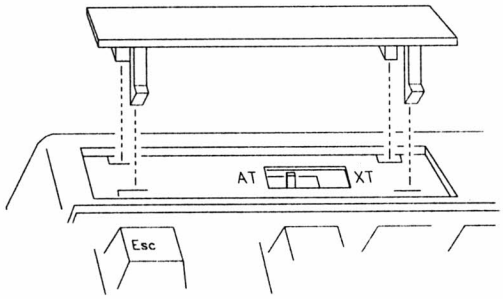

To set the switch on the underside of the keyboard, turn the keyboard over and set the 3-position switch to either of the two AT settings:

- AT/R — red LEDs in the keys
- AT/G — green LEDs in the keys.

Figure S-5. *AT/XT Compatibility Switch*