# Contents


## Chapter 1 Specification ..... 8

1-1 Mainboard Layout .....9
1-2 Mainboard Specification Table ..... 10
1-3 Chipset System Block Diagram .....11
1-4 Mainboard Specifications and Features ..... 12
1-4.1 CPU Socket .....12
1-4.2 System Chipsets .....12
1-4.3 BIOS .....12
1-4.4 Integrated VGA Interface .....12
1-4.5 Memory .....13
1-3.6 PCI Express Interface .....13
1-4.7 Advanced System Power Management .....13
1-4.8 IEEE 1394a Interface .....13
1-4.9 AC'97 Audio Codec on board .....13
1-4.10 Multi-I/O Functions .....14
1-4.11 SATA/AHCI/ / SATA RAID Interface (on SL-B5A-FGR) ..14
1-4.12 Hardware Monitor on board .....14
1-4.13 Gigabit Ethernet on board .....14
1-4.14 Form Factor .....14

## Chapter 2 Hardware Setup ..... 15

2-1 P4 775-pin CPU and Socket LGA 775 ..... 16
2-1.1 To Identify a P4 775-pin CPU .....16
2-1.2 To install P4 775-pin CPU into Socket LGA 775 .....16
2-1.3 P4 775-pin CPU Installation with Hyper-threading .....18
2-2 Memory Installation ..... 19
2-2.1 To Install DDR SDRAM Module .....19
2-2.2 Dual Channel Memory Features .....19
2-2.3 PCI Express Slot / VGA connector Installation .....20
2-4 IDE Connector Installation ..... 21
2-5 SATA /AHCI/ RAID Connectors ..... 22
2-6 Floppy Drive Installation ..... 23
2-7 SFX Power Supply Installation ..... 24
2-8 Jumper Setting ..... 25
2-8.1 How to tackle the Jumpers: .....25

2-8.2 JKB1: Keyboard/Mouse Wake-up ..... 26
2-8.3 JBAT1: Clear CMOS ..... 26
2-9 Other Connectors Configuration ..... 27
2-9.1 On-board FAN Connectors ..... 27
2-9.2 USB Ports and USB Pin-headers ..... 28
2-9.3 Back Panel Connectors ..... 29
2-9.4 PS/2 Mouse , PS/2 Keyboard ..... 29
2-9.5 RJ45 Connector ..... 30
2-9.6 CD-ROM Audio Connectors (CD_In1) ..... 30
2-9.7 Thermal Detector ..... 31
2-9.8 JAUD1: External Audio Connector ..... 31
2-9.9 Complex Pin-header (Front Panel Connectors) ..... 32
2-9.10 IEEE 1394a Port/Pin-header ..... 33
2-9.11 CPU Smart Acceleration LED: LED1 ..... 34

Chapter 3 Software Setup ..... 36

3-1 To Open up the Support CD ..... 37
3-2 Intel Chipset Software Installation Utility ..... 38
3-3 DirectX Installation ..... 39
3-4 Graphics Driver Installation ..... 40
3-5 AC'97 Audio Driver Installation ..... 41
3-5.1 Installing AC'97 8-channel Audio Driver ..... 41
3-5.2 Verifying 8-channel Audio ..... 42
3-6 To Install RTL8110S Gigabit Ethernet Drivers ..... 44
3-7 To Install Hardware Monitor Utility ..... 45
3-7.1 Installation ..... 45
3-7.2 Verification ..... 46
3-8 To Install USB 2.0 Driver for Windows 2000/XP ..... 47
3-9 To Install SATA RAID Driver for Windows 2000/XP ..... 47

Chapter 4 AMI BIOS Setup ..... 48

4-1 About BIOS Setup ..... 49
4-2 To Run BIOS Setup ..... 49
4-3 About CMOS ..... 49
4-4 The POST ( Power On Self Test ) ..... 49
4-5 To Update BIOS ..... 50
4-6 BIOS SETUP --- CMOS Setup Utility ..... 51
4-6.1 CMOS Setup Utility ..... 51
4-6.2 Standard BIOS Features ..... 53
4-6.3 Advanced BIOS Features ..... 54

**4-6.3.1 CPU Configuration ..... 55**
**4-6.3.2 IDE Configuration ..... 56**
**4-6.3.3 Floppy Configuration ..... 58**
**4-6.3.4 Super IO Configuration ..... 59**
**4-6.3.5 Hardware Health Monitor ..... 60**
**4-6.3.6 ACPI Configuration ..... 62**
**4-6.3.7. Event Log Configuration ..... 63**
**4-6.3.8. PCI Express Configuration ..... 64**
**4-6.3.9. USB Configuration ..... 64**
**4-6.3.10. Voltage Control ..... 65**
**4-6.3.11 APM Power Management ..... 65**
**4-6.3.12. Soltek Performance Options ..... 67**
**4-6.3.13. PCI Device Configuration ..... 68**
**4-6.4 Advanced Chipset Features ..... 69**
**4-6.4.1 NorthBridge Configuration ..... 70**
**4-6.4.2 SouthBridge Configuration ..... 72**
**4-6.5 PCI/PNP Resource Management ..... 73**
**4-6.6 Boot Configuration Features ..... 74**
**4-6.6.1 Boot Settings Configuration ..... 75**
**4-6.6.2 Boot Device Priority ..... 76**
**4-6.6.3 Hard Disk Drives ..... 76**
**4-6.6.4 Removable Drives ..... 76**
**4-6.6.5 CD/DVD Drives ..... 76**
**4-6.7. Boot Security Features ..... 77**
**4-6.7.1. Supervisor Password ..... 77**
**4-6.7.2. User Password ..... 77**
**4-6.7.3 Change Supervisor Password ..... 78**
**4-6.7.4 Change User Password ..... 79**
**4-6.7.5 Boot Sector Virus Protection ..... 80**
**4-6.8 Save Changes and Exit ..... 80**
**4-6.9 Discard Changes and Exit ..... 80**
**4-6.10 Load Optimal Defaults ..... 81**
**4-6.11 Discard Changes ..... 81**

**Chapter 5 SATA RAID/AHCI Setup ..... 82**
**5-0 About Disk Array ..... 83**
**5-0-1 Disk Array Interpretation ..... 83**
**5-0-2 Disk Array Member ..... 83**
**5-0-3 Disk Array Types Supported by ICH6R ..... 83**
**5-0-4 SATA Hard Disks Setup for RAID System ..... 84**
**5-1 Enable SATA RAID in System BIOS ..... 85**
**5-2 To Enter Intel RAID BIOS Utility Setup ..... 86**
**5-3 To Create Disk Array ..... 87**
**5-4 To Install SATA RAID Driver on Windows 2K/XP ..... 90**
**5-5 To Install SATA AHCI Hard Disks Driver ..... 93**
**5-5-1 To Enable AHCI Function in BIOS Setup ..... 93**
**5-5-2 Install Windows 2K/XP with 82801 FR AHCI Controller ... 94**

# Chapter 1 Specification

## Introduction

This series of mainboards features an integration of the powerful Intel 775-pin CPU (including P4Celeron D) and the North Bridge Intel 915G. The 775- pin CPU is a rapid execution engine providing 800/533MHz system bus, while North Bridge Intel 915G is a high performance integrated chipset providing Dual Channel DDR 400/333 SDRAM memory interface, DMI (Direct Media interface), VGA interface as well as PCI Express bus up to x16.

Integrated with North Bridge Intel 915G, South Bridge Intel ICH6 of B5A-FG supports the LPC I/O, upstream DMI, PCI interface (including IEEE 1394a and Gigabit LAN), IDE interface, Serial ATA interface, USB 2.0 interface, AC'-Link interface and the interrupt control, while South Bridge ICH6R of B5A-FGR is integrated with the additional SATA RAID interface.

This chapter is to introduce to users every advanced function of this high performance integration.

**Topics included in this chapter are:**

**1-1 Mainboard Layout**
**1-2 Specification Table**
**1-3 Chipset System Block Diagram**
**1-4 Mainboard Specifications and Features**

**** If any difference is found between this manual and the Mainboard you are using, please look up the <u>ERRATA/UPDATE Slip</u> enclosed inside for the correction or updated information, or else contact the Mainboard Dealer or visit our Web Site for the latest manual update.**

## 1-1 Mainboard Layout

ICH6 for B5A-FG without SATA RAID interface
ICH6R for B5A-FGR with RAID interface

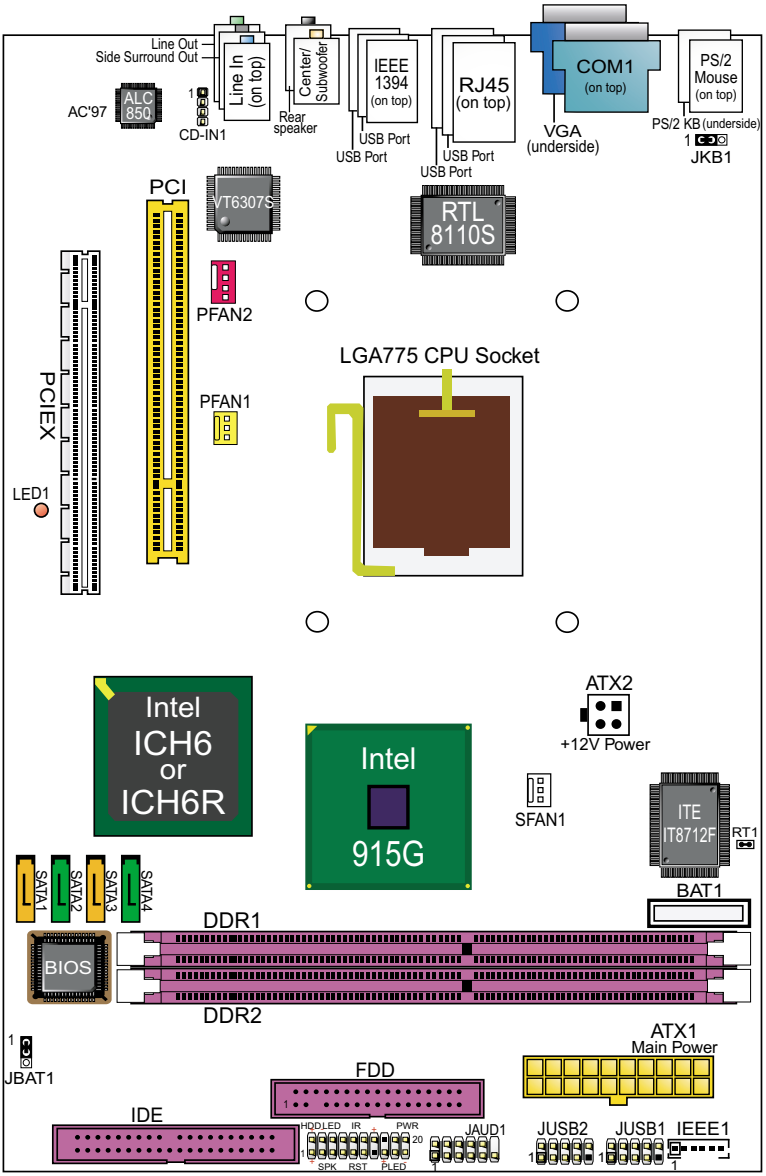

## 1-2 Mainboard Specification Table

| B5A-FG/B5A-FGR Specifications and Features | | |
|---|---|---|
| CPU | Socket 775 for P4 775-pin CPUs and 775-pin Celeron D CPUs | |
| North Bridge | Intel 915G, supporting FSB 800/533MHz | |
| South Bridge | Intel ICH6(no RAID)/ICH6R(with RAID controller) | |
| Memory | Supporting Dual Channel DDR 400/333 SDRAM, up to 2GB in 2 DDR DIMM slots | |
| I/O Chip | Chip IT8712-F-A | |
| PCI Express | PCI Express slot, supporting up to x16 Device card | |
| Audio | AC'97 Audio 2.3 compliant, 8-channel audio | |
| IDE Interface | 1 ATA 100/66/33 IDE Connector | |
| Serial ATA RAID Interface | 4 Serial ATA connectors in two sets supported by ICH6R for RAID0/RAID1 setup | |
| VGA | Integrated VGA, supporting 1 VGA connector | |
| Network | RTL8110S Gigabit Ethernet Controller, supporting 1 RJ45 port on board | |
| IEEE 1394 Interface | VIA VT6307S IEEE1394a Controller on board supporting 2 IEEE1394a ports | |
| PCI Slot | 1 PCI Master slot on board | |
| I/O Connectors | 8 USB V2.0, 1 FDD port, 1 serial COM port, 5 Audio In/Out ports, 1IrDA, 1 PS/2 Keyboard, 1 PS/2 Mouse | |
| Other Common Features | Keyboard/ Mouse Wake up; SAT(Smart Acceleration Technology) in BIOS | |
| Optional Feature | B5A-FG | B5A-FGR |
| RAID Interface | No (with ICH6) | Yes (with ICH6R) |

## 1-3 Chipset System Block Diagram

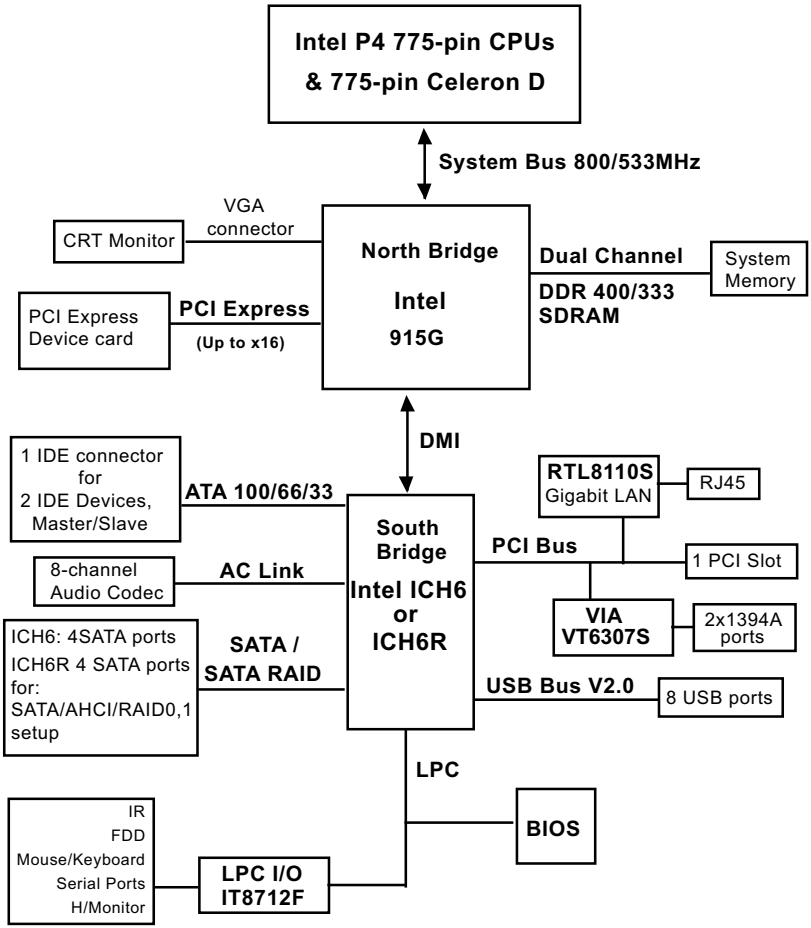


**775-pin Prescott CPU + Intel 915G + Intel ICH6/ICH6R Diagram**

# 1-4 Mainboard Specifications and Features

## 1-4.1 CPU Socket

CPU Socket LGA 775 on board, supporting Intel® Pentium 4 775-pin processors(including Intel Celeron D, Hyper Threading and Prescott CPUs) in 775-pin package for :

-- 800/533MHz System Bus

-- Hyper-pipelined technology -- Advanced dynamic execution;

-- Rapid Execution Engine -- Streaming SIMD Extensions 2

-- 128 Bit Enhanced Floating Point Unit -- Execution Trace Cache

## 1-4.2 System Chipsets

North Bridge Intel 915G:

- A high performance integrated chipset providing processor interface, Dual channel DDR 400/333 SDRAM memory interface, DMI, VGA interface and X16 PCI Express interface.
- Showing Hyper Threading Logo when booting with a Hyper-threading CPU.

South Bridge Intel ICH6 (for SL-B5A-FG):

- Supporting the LPC I/O, upstream DM interface, PCI interface (including, IEEE 1394a and Gigabit LAN), IDE interface, USB 2. 0 interface, AC-Link interface , and PCI Express interface

South Bridge Intel ICH6R (for SL-B5A-FGR):

- Supporting the LPC I/O, upstream DM interface, PCI interface (including IEEE 1394a and Gigabit LAN), IDE interface, SATA/SATA RAID interface USB 2.0 interface, AC-Link interface , and PCI Express interface

## 1-4.3 BIOS

Flash Memory for easy upgrade, and supporting various hardware configuration during booting system (See Chapter 4 BIOS Setup):

- Standard CMOS Features (Times, Date, Hard Disk Type etc.)
- Advanced BIOS Features (Virus Protection, Boot Sequence etc.
- Advanced Chipset Features (AT Clock, DRAM Timing etc.)
- Power Management Features (Sleep timer, Suspend Timer etc.)
- PNP/PCI Configurations (IRQ Settings, Latency Timers etc.)
- Integrated Peripherals (Onboard IO,IRQ, DMA Assign. etc.)
- Hardware Health Monitor (CPU/System Temp.,Fan speed etc.)
- Frequency/Voltage (CPU clock, Voltage of CPU, DIMM, AGP etc.)

## 1-4.4 Integrated VGA Interface

VGA supported by i915G:

- one VGA connector integrated on board, CRT VGA display

### 1-4.5 Memory

2 DDR DIMM 184-pin slots on board for non-ECC Dual Channel DDR 400/333 SDRAMs:

- DIMMs to be populated in identical pairs for Dual Channel operation
- Installation of mixed volumes yet same type of DDR SDRAM modules supported

### 1-3.6 PCI Express Interface

PCI Express interface integrated in 915G:

- supporting a raw bit-rate of 2.5 Gb.s on the data pins, resulting in a real bandwidth per pair of 250MB/s.
- Enhanced Addressing Machanism
- PCI Express Graphics card (not supporting AGP card) up to x16

### 1-4.7 Advanced System Power Management

Advanced Configuration and Power Interface incorporated in BIOS for reducing power consumption :

- ACPI 1.0 compliant (Advanced Configuration and Power Interface)
- APM V1.2 compliant (Legacy Power Management)
- ACPI Suspend function supported
- PS/2 Keyboard & Mouse Wake-up
- Real Time Clock (RTC) with date alarm, month alarm, and century field

### 1-4.8 IEEE 1394a Interface

The IEEE 1394a Controller, VIA VT6307S chipset on board, providing enhanced PC connectivity for a wide range of devices, including consumer audio/video components, storage periperals, and other portable devices.

- PCI-bus based open host controller, compliant with IEEE 1394a-2000 standard for high performance serial bus
- 2 fully compliant IEEE 1394a ports providing up to 400MB/sec transfer rate to fulfill various requirments of any multimedia devices.

### 1-4.9 AC’97 Audio Codec on board

AC’97 Audio Codec Realtek ALC850 on board

- 8 channel audio consists of Front-Out, Side Surround-Out, Center-Out, Subwoofer-out, Surround-Back-Out, MIC-In, Line-In, and Front-MIC-In for complete surround sound effect
- SPDIF Out connector integrated in Front Panel
- AC’97 Audio Driver enclosed in Support CD for user’s installation

### 1-4.10 Multi-I/O Functions

- PCI EIDE Controller, supporting:
  -- 1 ATA 100 / 66 IDE connectors supporting up to 2 IDE devices
- Dedicated IR Functions:
  -- 1x5 IR connector dedicated to IR function with Infrared-IrDA (HPSIR) and ASK (Amplitude Shift Keyed) IR
- Floppy Drive Connector:
  -- 1 FDD connector supporting 1 floppy drive for barebone system
- Universal Serial Bus Transfer Mode:
  -- USB V2.0 compliant, 480 Mb/s USB Bus, supporting Windows 98 and later operating systems; USB drivers provided in Support CD for installation
  -- 4 built-in USB connectors and 2 more USB pin-headers which require 2 optional USB cables to provide 4 more USB ports
- PS/2 Keyboard and PS/2 Mouse
- UARTs (Universal Asynchronous Receiver / Transmitter):
  -- 1 complete serial port on board.

### 1-4.11 SATA/AHCI/ / SATA RAID Interface (on SL-B5A-FGR)

Serial ATA/AHCI / RAID Interface supported by ICH6R:

- Supporting 4 Serial ATA / SATA RAID connectors for 4 SATA Hard Disks with 150MB/s transfer rate
- SATA RAID Hard Disk should be set up in pair on SL-B5A-FGR
- Serial ATA AHCI/RAID Drivers enclosed in Support CD/Floppy Diskette for user's installation

### 1-4.12 Hardware Monitor on board

- Hardware Monitor integrated, providing monitoring functions on hardware voltage, temperatures and fan speeds.
- Utility Software Soltek Hardware Monitor for displaying monitor status is enclosed in Support CD for user's installation.

### 1-4.13 Gigabit Ethernet on board

PCI local bus single-chip Gigabit Ethernet Controller RTL8110S on board:

- Supporting 10/100/1000Mb data transfer
- Supporting Wake On LAN function through the on-board RJ45 LAN Connector

### 1-4.14 Form Factor

- Soltek SFX Power Supply
- Mainboard size: 180mm x 270mm

# Chapter 2 Hardware Setup

## To Get Things Ready for Hardware Setup !

1. We recommend to install your CPU before any other components. For detailed installation instructions of processor, you can also refer to the pamphlet enclosed in your CPU package.
2. Installing a cooling fan with a good heat sink is a must for proper heat dissipation for your CPU. Get ready an appropriate fan with heat sink for proper installation. Improper fan and installation will damage your CPU.
3. In case CPU Vcore, CPU clock or Frequency Ratio is adjustable on board, please follow the instructions described in the User's manual for proper setup. Incorrect setting will cause damage to your CPU.

## The following topics are included in this chapter:

**2-1 P4 775-pin CPU and Socket LGA 775 ..... 16**
**2-1.1 To Identify a P4 775-pin CPU ..... 16**
**2-1.2 To install P4 775-pin CPU into Socket LGA 775 ..... 16**
**2-1.3 P4 775-pin CPU Installation with Hyper-threading ..... 18**
**2-2 Memory Installation ..... 19**
**2-2.1 To Install DDR SDRAM Module ..... 19**
**2-2.2 Dual Channel Memory Features ..... 19**
**2-2.3 PCI Express Slot / VGA connector Installation ..... 20**
**2-4 IDE Connector Installation ..... 21**
**2-5 SATA /AHCI/ RAID Connectors ..... 22**
**2-6 Floppy Drive Installation ..... 23**
**2-7 SFX Power Supply Installation ..... 24**
**2-8 Jumper Setting ..... 25**
**2-8.1 How to tackle the Jumpers: ..... 25**
**2-8.2 JKB1: Keyboard/Mouse Wake-up ..... 26**
**2-8.3 JBAT1: Clear CMOS ..... 26**
**2-9 Other Connectors Configuration ..... 27**

# 2-1 P4 775-pin CPU and Socket LGA 775

## 2-1.1 To Identify a P4 775-pin CPU

The pin-pad side of 775 CPU

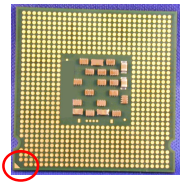

This yellow triangle denotes Pad 1 of CPU.

LGA 775 CPU
(with heat glue on surface)

The Heat Glue on surface is for better heat dispersion

The yellow triangle denotes location of Pad 1.

## 2-1.2 To install P4 775-pin CPU into Socket LGA 775

1. LGA 775 socket is safeguarded by a metal cover and a protective cap on top. Never remove the protective cap before CPU has already been installed into socket.

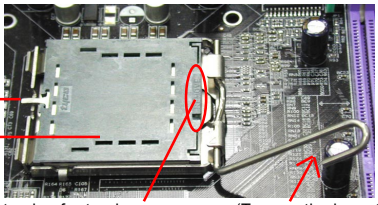

(Press down this tongue to turn up the cover.)

(The protective cap is protecting LGA 775 socket-pins from unnecessary exposure.)

(The Protrusion for turning up the protective cover and cap.)

(Turn up the lever this way to unlock the metal cover.)

2. Pull sideway the socket lever and turn it up so as to unlock the metal cover from the socket base.
3. Since the metal cover together with the cap is unlocked from the socket base now, use a fingertip to pull at the protrusion at one end of cap so as to turn the cover and cap up.
4. The cover and the cap are turned open now, revealing the socket-pins. We should be aware that the pins are so delicate they are forbidden to be touched with anything other than a 775-pin CPU.

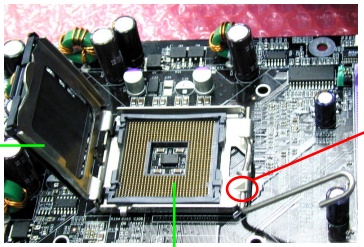

(Turn open the cover and cap this way to reveal the socket pins.)

(The triangle here denotes Socket Pin1 location.)

(The socket pins)
Attention: The pins are so delicate that they are forbidden to be touched with anything other than a 775-pin CPU.

5. As soon as the Cover and Cap is lifted up, place down the 775 CPU gently into 775 Socket with Pad1 matching Socket Pin1.

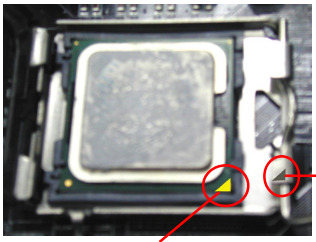

(This triangle on socket denotes Socket Pin1 location.)

(This yellow triangle on CPU denotes Pad1of CPU.)

6. When you have made sure the 775-CPU is properly laid down, you should now return the Metal Cover to Socket so as to fix down the CPU.
7. After returning the Metal Cover to Socket, pull back the Socket Lever to Socket until it gets back to the latch.
8. Since the Metal Cover is returned to Socket, use a fingertip to lift and remove the protective Cap for the Cooling Fan installation.

(The Cap is lifted up away from the Cover and can be removed now.)

(Attention: Never remove this Protective Cap if CPU is not in Socket.)

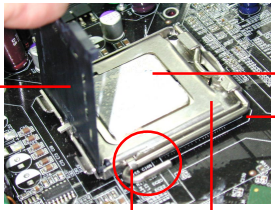

(The 775 CPU)

(The 775-Socket)

(Lever returned to Latch)

(The Metal cover)

9. CPU is installed, Metal cover fixed to socket, Protective Cap removed, we should install CPU Cooling Fan now.

(CPU installed, Metal Cover fixed to Socket, and Protective Cap removed, we should install CPU Cooling Fan now.)

( Cooling Fan Support Hole)

( Cooling Fan Support Hole)

10. Insert the 4 Fan Supporters into the Support Holes on board, and then connect the Fan Power cable to the Fan Connector on board.

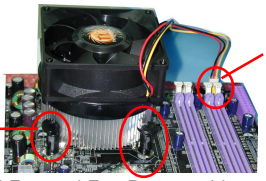

(The Fan cable is connected to Fan connector on board.)

(775 Cooling Fan Supporter)

CPU Fan and Fan Power cable are set up.

## 2-1.3 P4 775-pin CPU Installation with Hyper-threading

- 775-PinCPU also supports hyper-threading technology.
- After installation of 775-pin CPU, you should also install Windows XP to enable Hyper-threading dual-in-one CPU function. Win98/Me/2K do not support Hyper-threading dual-in-one CPU function.

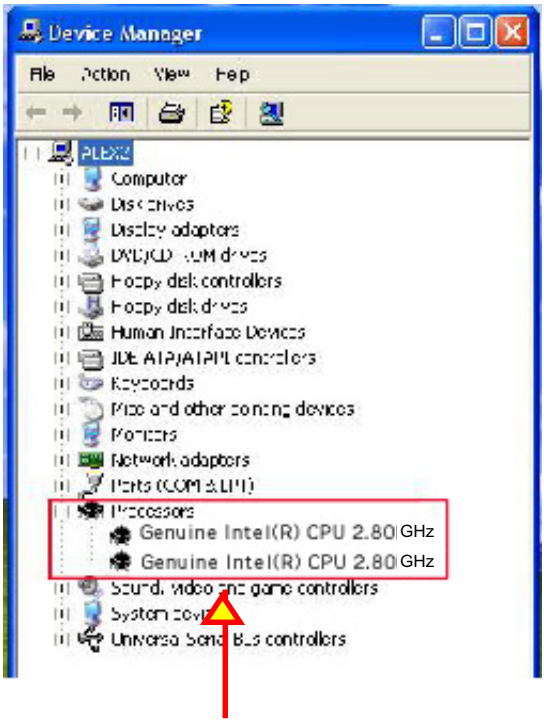


( If Hyper-threading CPU is installed successfully with O/S Win XP, the O/S will enable the dual-in-one CPU function.)

## 2-2 Memory Installation

### 2-2.1 To Install DDR SDRAM Module

- Make sure to unplug your Power Supply before adding or removing memory module. Failure to do so may cause severe damage to both your mainboard and the memory module.
- Pay attention to the orientation of the DIMM slots. Forcing a DIMM in a socket improperly will damage the memory module and slot.
- Make sure you have the right type of memory module for your mainboard.

### 2-2.2 Dual Channel Memory Features

- Dual Channel Memory Configuration is formed by couple of identical DDR SDRAMs.
- Matched DIMMs need to have identical density, DRAM technology, DRAM bus width, and equal number of memory banks.
- This Mainboard supports up to 2GB unbuffered Dual Channel DDR 400/333 SDRAM, with 2 DDR DIMM slots on board. Do not insert other type of modules into these slots.
- The dual memory controller can double the DDR memory bandwidth up to 6.4GB/s with DDR400, 5.4GB/s with DDR333.

184-Pin DIMM Notch Key Definition

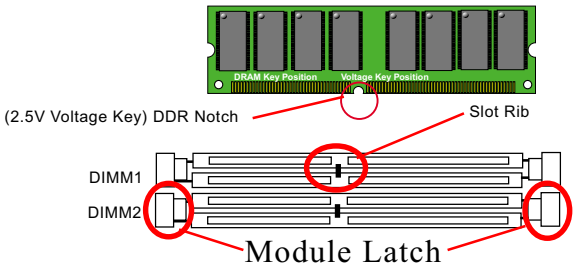


**To Boot PC with Dual Channel Memory Configuration**
**Populate both DIMM1 and DIMM 2 with identical DIMMs**

**To Boot PC with Single Channel Memory Configuration**
**Populate DIMM1 or DIMM2 to boot system**

## 2-2.3 PCI Express Slot / VGA connector Installation

1. PCI Express Slot is provided on board for PCIE Device card Attachment (including Graphics card, LAN card etc.) up to x16, supporting a raw bit-rate of 2.5Gb/s on the data pins. It does not support AGP 1X/2X/4X/8X card.
2. VGA connector is integrated on board for conventional VGA display.
3. This series of mainboard does not support simultaneous display of VGA and PEX graphics card.

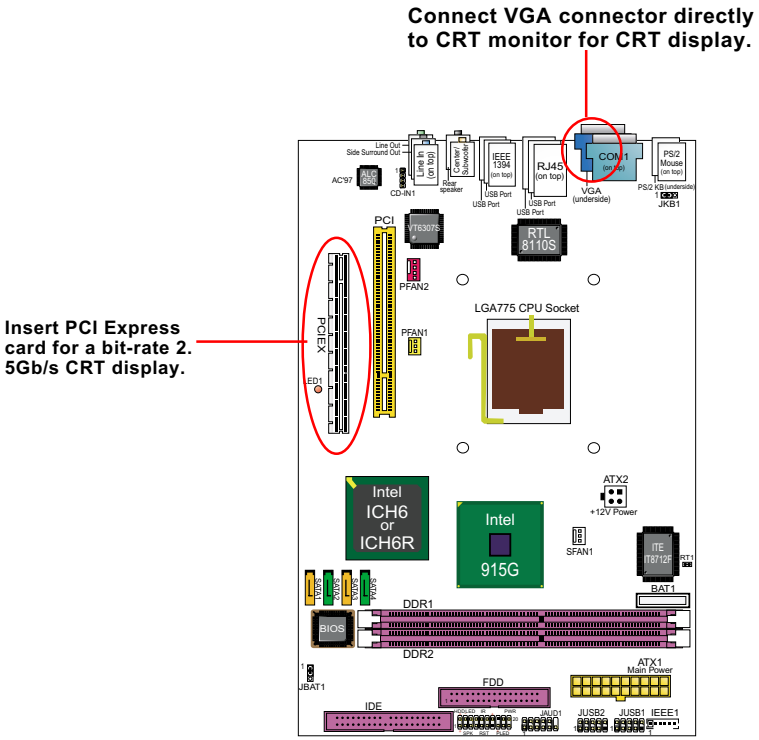

## 2-4 IDE Connector Installation

IDE connector supports 2 IDE devices for up to 100MB/s data transfer.

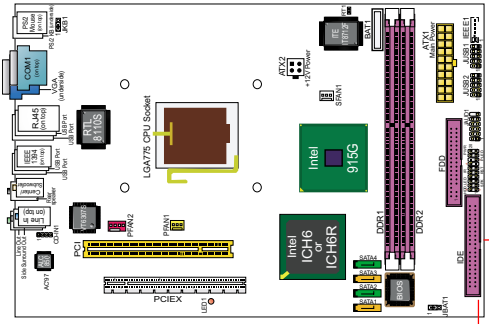


IDEConnector
IDE: ATA IDE connector
Orient the red line on the IDE Flat Cable to Pin1.

Pin 1 (to Red Line of IDE cable)

**80-conductor IDE Cable (for 2 IDE devices)**

This kind of cable is dedicated for Mini-barebone system because the ribbon is bundled up and will not block the air flow in the barebone cabinet.

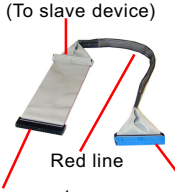

## 2-5 SATA /AHCI/ RAID Connectors

(1) 4Serial ATA connectors for 4 SATA RAID Hard Disks setup.
(2) 4 Serial ATA connectors also supports 4 SATA AHCI all-master hard disks setup. That means, SATA AHCI mode does not require mas ter/slave differentiation.

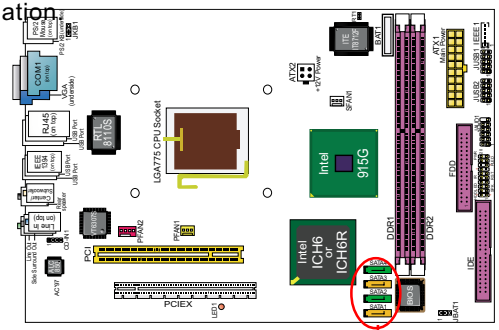


**Attention:**
**(1) Supporting SATA RAID, SATA1 plus SATA3 or SATA2 plus SATA4 are liknked together for a pair of SATA RAID hard disk setup. 4 SATA connectors can also be applied to 4 hard disk at the same time for 0 or 1 mode RAID setup.**
**(2) Supporting SATA AHCI setup, 4 SATA connectors supports 1 to 4 all-master hard disks setup.**

**Serial ATA Connectors**

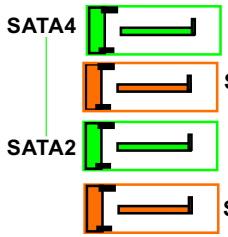


**SATA Connectors supported by ICH6R for 2 sets of SATA RAID Hard Disks setup.**

**Serial ATA Cable**

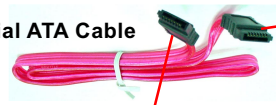

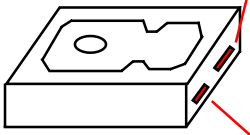

**Serial ATA Hard Disk**

**To Power Supply**

**SATA Power Connectors**

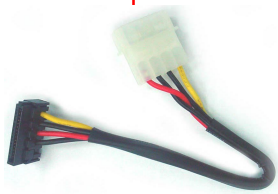

**Serial ATA Power Cable (optional)**

## 2-6 Floppy Drive Installation

To install FDC on barebone system, you should connect the end with Signal Swap of the floppy drive cable to floppy drive, and connect the other end to the floppy drive connector (FDC) on Mainboard.

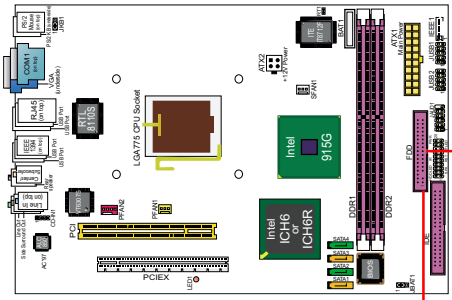


Floppy Drive Connector:

Orient the red line of the Floppy Flat Cable to Pin1.

Pin 1 (to Red Line)

**34-pin FDC cable**
**(Dedicated for Barebone)**

This kind of cable is dedicated for Mini-barebone system because the ribbon can be bundled up and will not block the air flow in the barebone cabinet. A dedicated cable supporting only one floppy drive is dedicated for the Mini-barebone System.

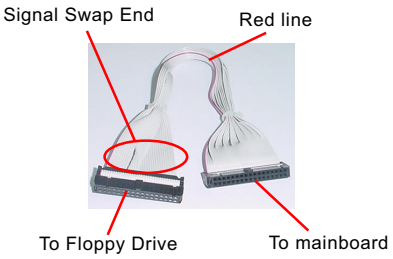

## 2-7 SFX Power Supply Installation

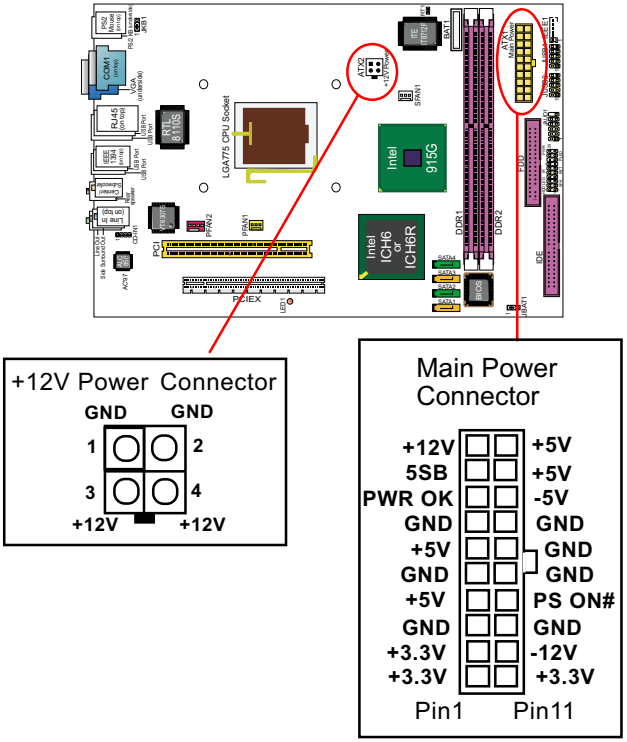


Soltek SFXV3.01 Power Supply is strongly recommended for mainboard running with this mainboard.

To set up Power Supply on this mainboard:

1. Connect the on-board Main Power Connector (20-pin) to the Main Power Connector (20-pin) of an SFX Power Supply which can be of the latest version V3.01 model, and then connect the square-shaped +12V Power Connector on board to the square-shaped +12V Power Connector of the Power Supply.
   Warning: Both the Main Power Connector and the +12V Power Connector should be connected to Power Supply; otherwise, the system may either not start or be damaged.
2. This SFX Power Supply should be able to provide at least 720mA/ +5V standby power for Wake On Lan function.

# 2-8 Jumper Setting

## 2-8.1 How to tackle the Jumpers:

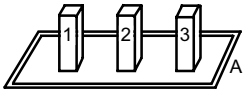


A 3-pin Jumper

If a pin-header (of 2 or more pins) is designed in such a way that its pins can be closed or linked together to set up a specific function, this header is called a jumper in this manual.

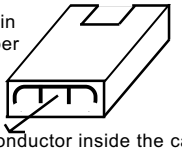

A 2-pin Jumper Cap

The conductor inside the cap links two header-pins together.

- A Jumper is usually but not necessarily given a "JpX" legend.
- In the Jumper setting diagram, all jumper pins covered with black marks stand for closed pins with jumper cap.

Jp X

**Jumper with Pin 2-3 closed**

**Jumper with all pins open**

**Jumper with Pin 1-2 closed**

- Do not remove any jumper cap when power is on. Always make sure the power is off before changing any jumper settings. Otherwise, mainboard could be damaged.

The following diagrams show the locations and settings of jumpers on the mainboard.

## 2-8.2 JKB1: Keyboard/Mouse Wake-up

| JKB1<br>Keyboard/Mouse Wake-up | |
|---|---|
| 1 | 2-3 closed<br>Disabled |
| 1 | 1-2 closed<br>Enabled (default) |

JKB1 is designed to enable / disable the PS/2 Keyboard or PS/2 Mouse Wake-up (from suspend mode). Setting JKB1 to 1-2 closed will enable this function while setting JKB1 to 2-3 closed will disable this function.

Yet users still have to choose the KB/ Mouse Wake-up mode in BIOS setup. USB KB/Mouse Wake-up is optionally supported on this mainboard.

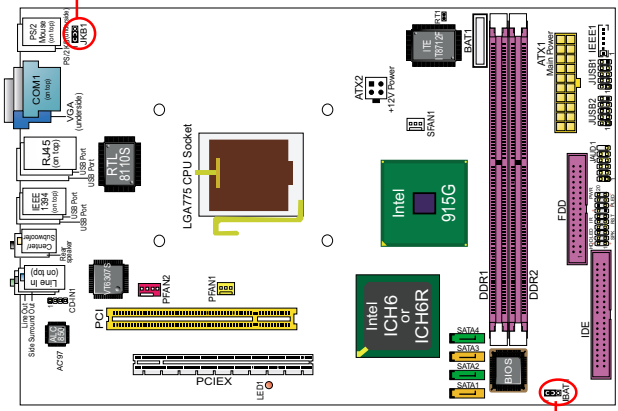


## 2-8.3 JBAT1: Clear CMOS

When you have problem with rebooting your system, you can clear CMOS data and restore it to default value. To clear CMOS with Jumper JBAT1, please follow the steps below:

1. Power off system.
2. Set JBAT1 to Pin 2-3 closed.
3. After 2 or 3 seconds, return the JBAT1 setting to Pin1-2 closed.
4. CMOS data are restored to default. Remember never clear CMOS when system power is on.

| JBAT1<br>Clear CMOS | |
|---|---|
| 1 | 1-2 closed<br>(default)<br>To hold data |
| 1 | 2-3 closed<br>To clear CMOS |

## 2-9 Other Connectors Configuration

This section lists out all connectors configurations for users' reference.

### 2-9.1 On-board FAN Connectors

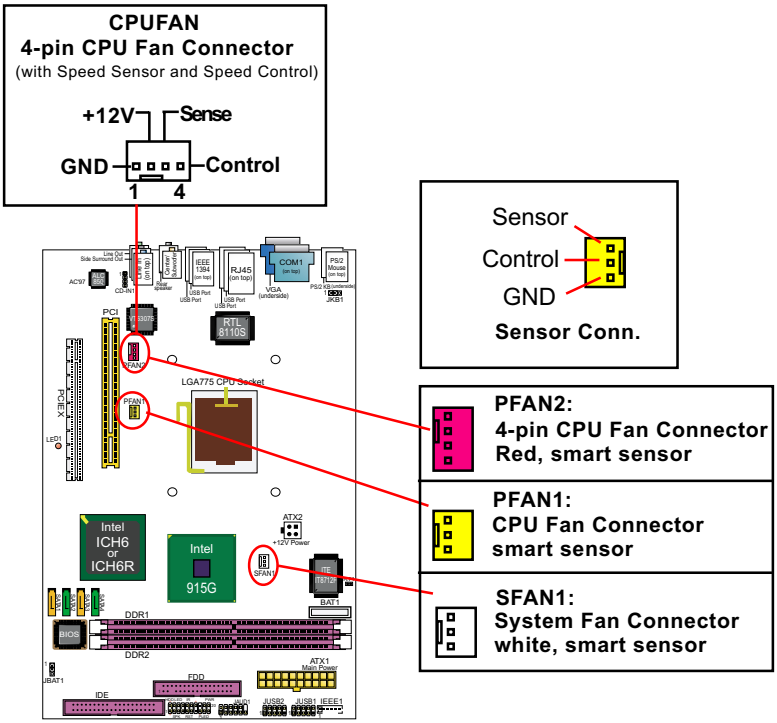


PFAN1 is a 3-pin conventional CPU Fan connector.

PFAN2 is a standard 4-pin CPU Fan connector

SFAN1 is a 3-pin system Fan connector

All three Fan connectors are speed sensor and speed control Fan connectors supporting temperature detection and subsequent speed control.

## 2-9.2 USB Ports and USB Pin-headers

This series provides 4 USB ports on board supporting various USB devices. In addition, 2 USB pin-headers are added on board to provide expansion of 4 more optional USB ports by using 2 additional USB Cables. User can order the optional USB cables from your mainboard dealer or vender.

When plugging the USB cable to USB Header, users must make sure the red wire is connected to Pin 1.

All 8 USB ports are compliant with 1.0 / 2.0 USB Bus. Please refer to Chapter 3 Drivers Setup for USB2.0 drivers setup.

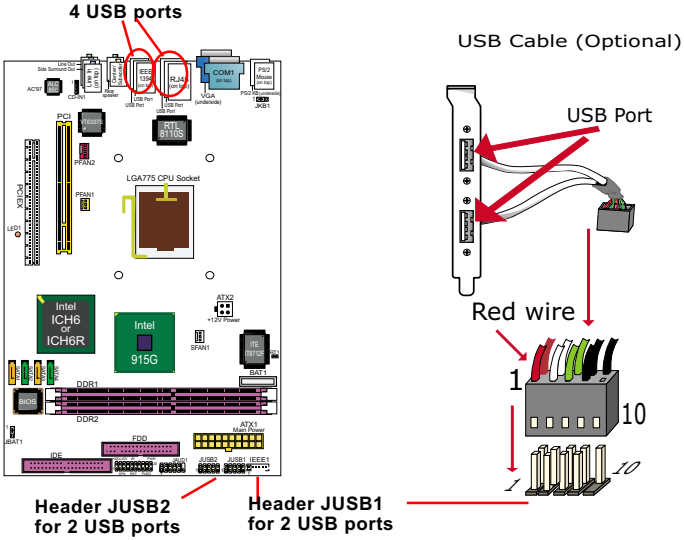


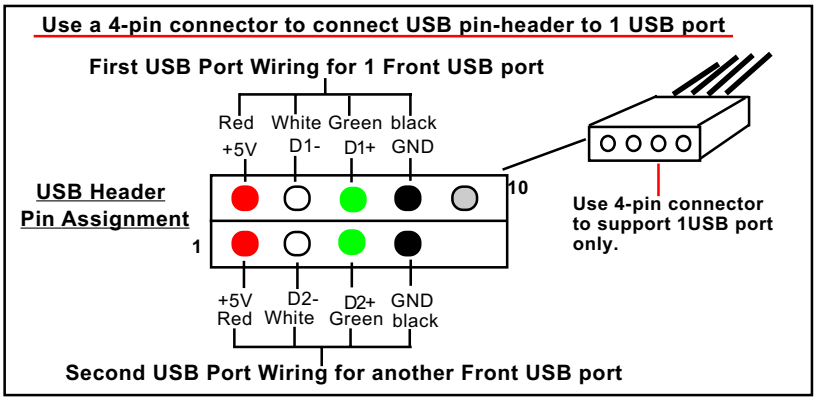

## 2-9.3 Back Panel Connectors

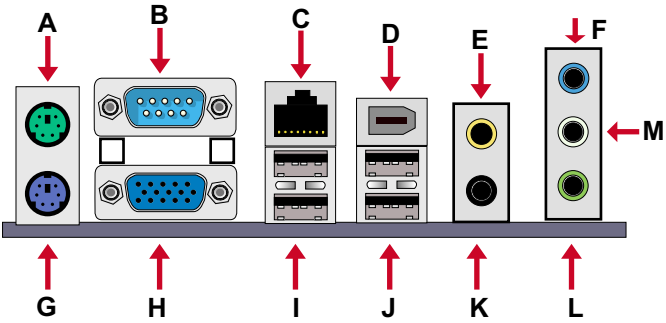


A : PS/2 Mouse
B : COM1
C : RJ45
D : IEEE 1394A
E : Center / Subwoofer
F : Line In

G : PS/2 Keyboard
H : VGA
I : 2 USB ports
J : 2 USB ports
K : Rear Speaker-out
L : Line Out/Front Speaker Out
M : Side Surround Speaker Out

## 2-9.4 PS/2 Mouse , PS/2 Keyboard

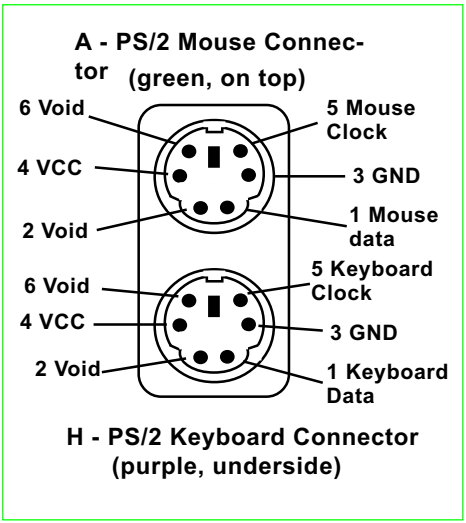

## 2-9.5 RJ45 Connector

One RJ45 connector is on board for LAN connection, supporting 10/100/1000Mb data transfer.

Orange LED blinks to indicate that data transmission is undergoing in 1000 Base T mode.

Yellow LED "On" to indicate Network hub is in connection with the system.

**F (in Back Panel):**

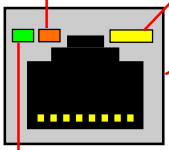

Green LED blinks to indicate that data transmission is undergoing in 10/100 Base T mode.

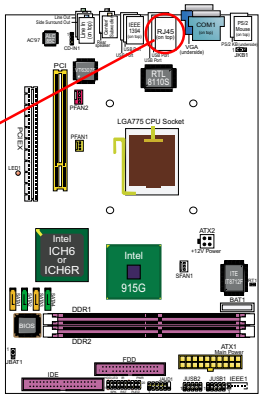


## 2-9.6 CD-ROM Audio Connectors (CD_In1)

CD-In1 is an audio connector connecting CD-ROM audio to mainboard.

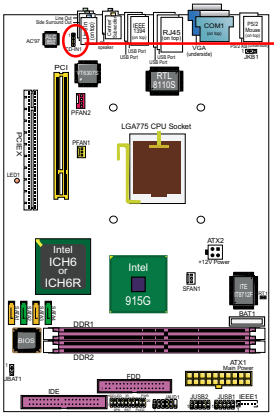


| CD-ROM Audio Connector | |
|---|---|
| 1 CD-In1 | Pin Signal |
| Pin 1 | Left Channel |
| Pin 2 | GND |
| Pin 3 | GND |
| Pin 4 | Right Channel |

## 2-9.7 Thermal Detector

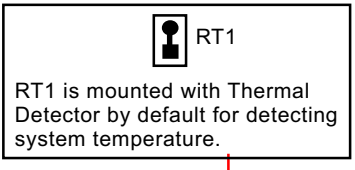

RT1

RT1 is mounted with Thermal Detector by default for detecting system temperature.

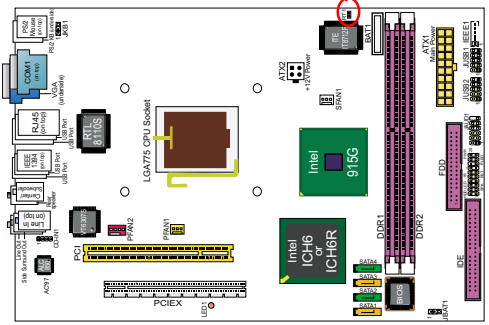


## 2-9.8 JAUD1: External Audio Connector

External Audio Out Connector supports Front Panel S/PDIF Output, Front Panel Mic-In and Front Panel Line-out.
This External Audio-out Connector requires an S/PDIF Audio Cable to connect itself to Front Panel Audio Connectors.

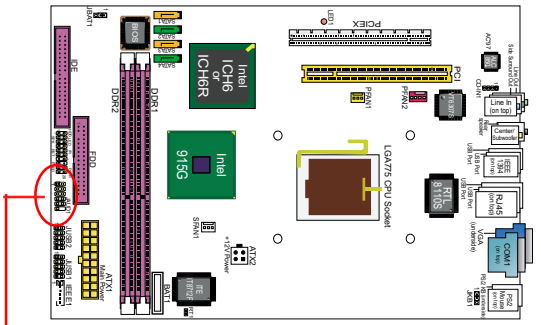


**Audio-out Pin Assignment**

**Pin 1 SPDIFIN**
**Pin 3 GND**
**Pin 5 +5V**
**Pin 7 MIC IN**
**Pin 9 LINE IN L**
**Pin11 LINE IN R**

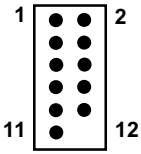


**Pin 2 GND**
**Pin 4 +5V**
**Pin 6 SPDIF OUT**
**Pin 8 +5VA**
**Pin10 GNDA**
**Pin 12 Key**

## 2-9.9 Complex Pin-header (Front Panel Connectors)

This complex Pin-header consists of the following connectors for various front panel supports. When you have fixed the mainboard to the case, join the connectors of this Complex Pin-header to the case Front Panel.

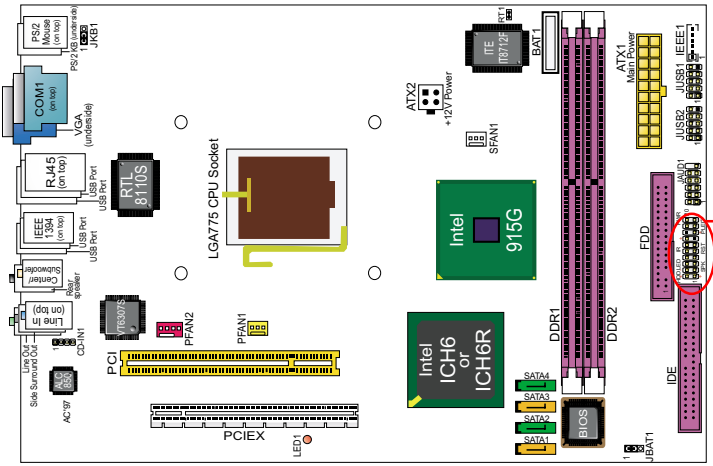


**Connect these connectors to PC Front Panel.**

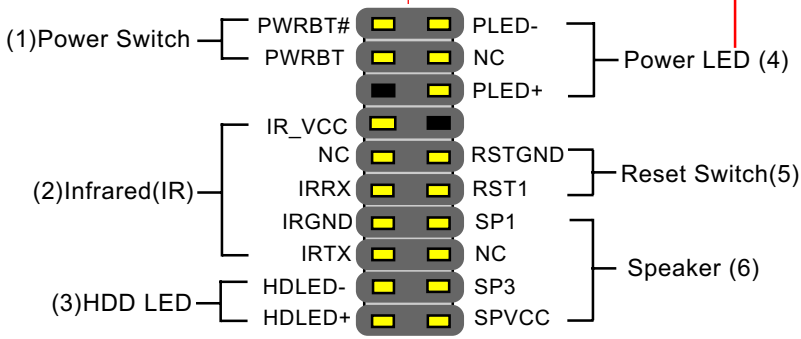

## 2-9.10 IEEE 1394a Port/Pin-header

1394A Interface, with VT6307S Open Host Controller on board, supporting 2 x 1394A serial ports:

- Each 1394A port supporting 400/200/100 Mbits transfer rate.

**1394A port**
**Connect 1394A port directly to 1394A device.**

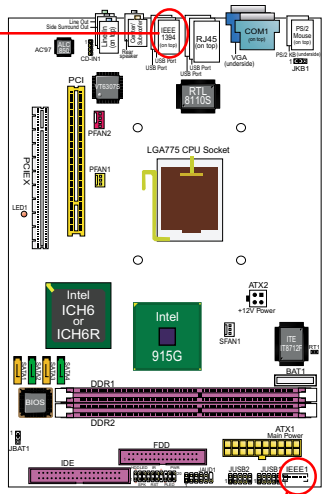


**IEEE1 : 1394A connector**

**IEEE1**

**Pin Assignment**

| | |
|---|---|
| Pin 1 | BPWR(+12V) |
| Pin 2 | GND |
| Pin 3 | TPB(0/1/2)- |
| Pin 4 | TPB(0/1/2)+ |
| Pin 5 | TPA (0/1/2)- |
| Pin 6 | TPA (0/1/2)+ |

**IEEE1394 Cable (optional)**

## 2-9.11 CPU Smart Acceleration LED: LED1

LED1 is a Smart CPU Acceleration LED working under Smart Acceleration Technology (SAT) developed by Soltek itself.
To enable Smart Acceleration LED1, please enter BIOS Setup and enable Smart Acceleration Technology as illustrated below.

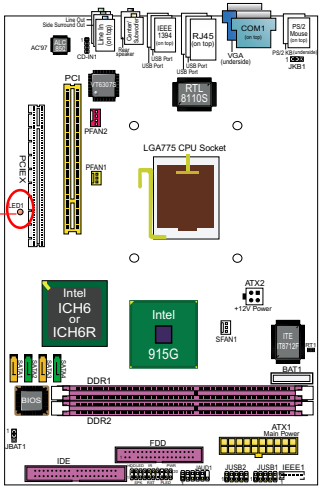


**Smart Acceleration LED: LED1**

**Choose Enhanced Mode/**
**Performance Mode/**
**Maximum Mode**
**in BIOS Setup for the Smart Acceleration Technology and LED1 to work on.**

Choose “Soltek Performance Options” in “Advanced BIOS Features” and press <Enter>. The following sub-screen will appear for configuration:

**(Advanced BIOS Setup)**
**Soltek Performance Options**

| Soltek Performance Configuration | | Help Item |
|---|---|---|
| CPU FSB Selection | Auto | |
| CPU Linear Frequency | Enabled | |
| CPU Clock | 200MHz | |
| Smart Acceleration Technolog | Disabled | |

### Smart Acceleration Technology

If CPU Linear Frequency is disabled, this item “Smart Acceleration Technology” will appear to allow you to enable the CPU dynamic overclocking. If Smart Acceleration Technology is enabled, a running CPU onboard will dynamically (automatically) adjust its own CPU performance during necessary or appropriate conditions.
Choices: Disabled;
Enhanced Mode;
Performance Mode;
Maximum Mode

# Memo

# Chapter 3 Software Setup

## Drivers, Utilities and Software Installation

• Support CD:
This series of mainboards will be shipped with a Support CD which contains those necessary driver files, Application Softwares and some helpful utilities. It is a user-friendly, auto-run CD which will open itself up in a CD-ROM automatically.

This chapter is introduce the installations of all these essential drivers and utilities on Windows 2000 and Windows XP. And installation on Windows 2K is taken as the general illustration hereby.

**3-1 To Open up the Support CD ..... 37**
**3-2 Intel Chipset Software Installation Utility ..... 38**
**3-3 DirectX Installation ..... 39**
**3-4 Graphics Driver Installation ..... 40**
**3-5 AC'97 Audio Driver Installation ..... 41**
**3-5.1 Installing AC'97 8-channel Audio Driver ..... 41**
**3-5.2 Verifying 8-channel Audio ..... 42**
**3-6 To Install RTL8110S Gigabit Ethernet Drivers ..... 44**
**3-7 To Install Hardware Monitor Utility ..... 45**
**3-7.1 Installation ..... 45**
**3-7.2 Verification ..... 46**
**3-8 To Install USB 2.0 Driver for Windows 2000/XP ..... 47**
**3-9 To Install SATA RAID Driver for Windows 2000/XP ..... 47**

## 3-1 To Open up the Support CD

1. Please put the Support CD enclosed in your mainboard package into the CD-ROM drive. In a few seconds, the Main Menu will automatically appear, displaying the contents to be installed for this series:

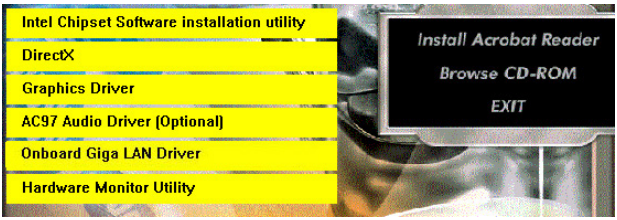


2. In case your system does not open the Support CD automatically, please click to the following path to enter the Main Installation Menu:

   D:\ Autorun.exe (assuming that your CD-ROM Drive is Drive D)

3. Drivers will be updated from time to time in our web site. If you are installing a newer driver than the one illustrated in this chapter, please be aware that the illustration pictures might be different.

## 3-2 Intel Chipset Software Installation Utility

1. Following the procedures of opening the Support CD, click to " Install Intel Chipset software installation Utility" to proceed.

2. The Intel Service Pack InstallShield Wizard will pop up to guide you to the Intel Service pack installation. Press **"Next"** button to continue.

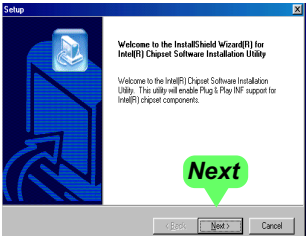


3. **"Intel Software License Agreement"** screen will appear, please click the **"Yes"** button to agree with the Licence Agreement and continue.

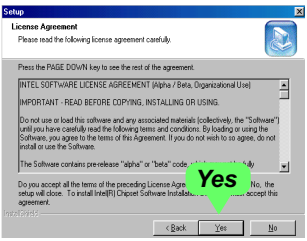


4. After all the setup process is finished, please restart your computer by clicking on "Finish" so as to take the Utility into effect.

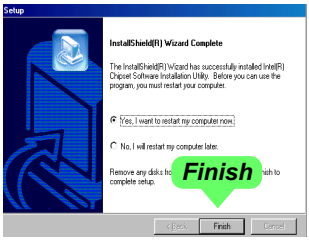

## 3-3 DirectX Installation

Following the installation of INF, you have to restart system so that your system can be reconfigured with the driver just installed. When restarting procedures finish, please open the Support CD with your CD-ROM to enter the Main Installation Menu.
Then click to “Install DirectX”. This utility will support a better graphic display of the built-in VGA interface.

1. When the screen of “Microsoft DirectX 9.X Setup” appears, please press “Yes” button to continue.

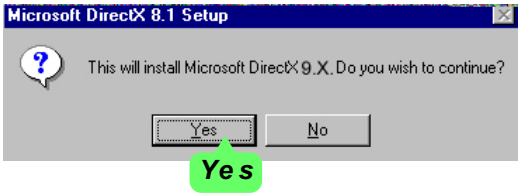


2. After all the setup procedures have completed, click to “OK” button to exit the Installation program and re-start your system.

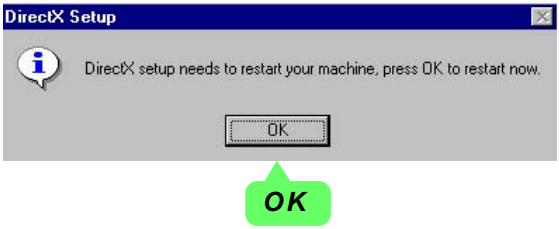

## 3-4 Graphics Driver Installation

Please open the Support CD with your CD-ROM to enter the Main Installation Menu.

1. For installation of on-board VGA driver, you must first connect the monitor to the on-board VGA connector. Then click to “Install Graphics Driver”. The Graphics Driver is specifically for on-board VGA.

2. When the screen of “Intel(R) Extreme Graphics Driver Software Setup” appears, please press “Next” button to continue.

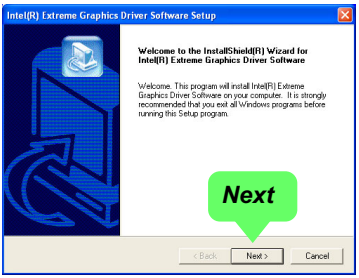


3.On the “Licence Agreement” screen, click on “Yes” to continue.

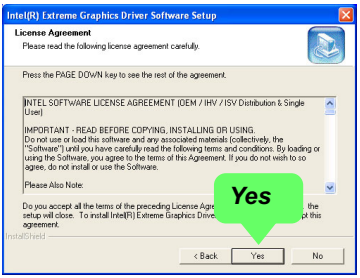


3. After all the setup procedures have completed, click to “Finish” button to exit the Installation program and restart your system.

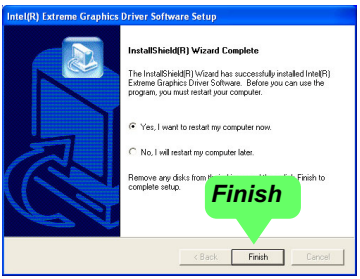

## 3-5 AC'97 Audio Driver Installation

RTL ALC850 8-channel AC97 Audio Codec on board, AC'97 2.3 compatible stereo audio code for PC multimedia systems. AC'97 Audio Codec Driver is provided in Support CD for user's installation.

### 3-5.1 Installing AC'97 8-channel Audio Driver

1. Following the procedures of opening the Support CD, click to " AC'97 Audio Driver" to proceed.

2. Instantly, the "installShield Wizard" screen appears to guide you through the "AC'97 Audio Setup"".

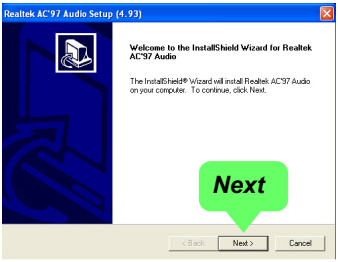


3. instantly, the Setup program proceeds to install the softwares. (If you want to stop setup, click the "Cancel" button.)

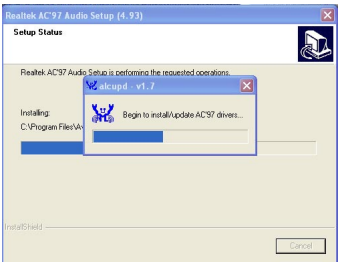


4. After the setup process is finished, please check the radial button "Yes, I want to restart my computer now." And click "Finish" to restart your system.

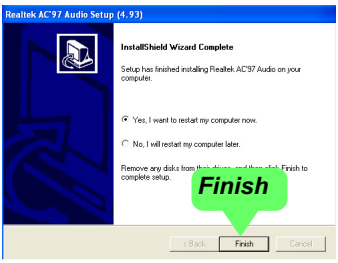

## 3-5.2 Verifying 8-channel Audio

After installation of AC'97 8-channel Codec, you must configure the 7.1 Speaker connection to enable the 8-channel audio.

1. Connect your on-board Audio Connector to your 8-channel speakers as depicted in the figure below:

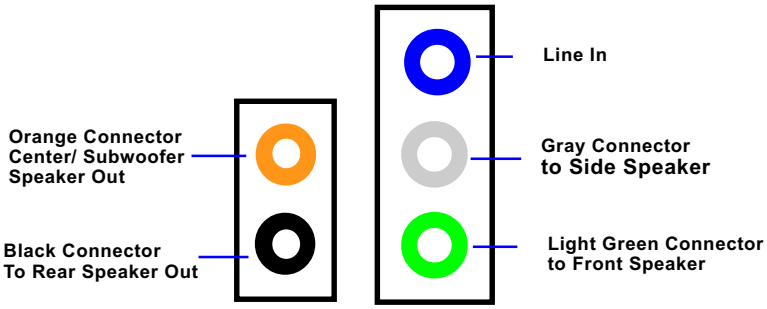


Back Panel Audio Connectors

2. After Connection is done, start your Windows system and double click the Sound manager icon to enter 8-channel configuration:

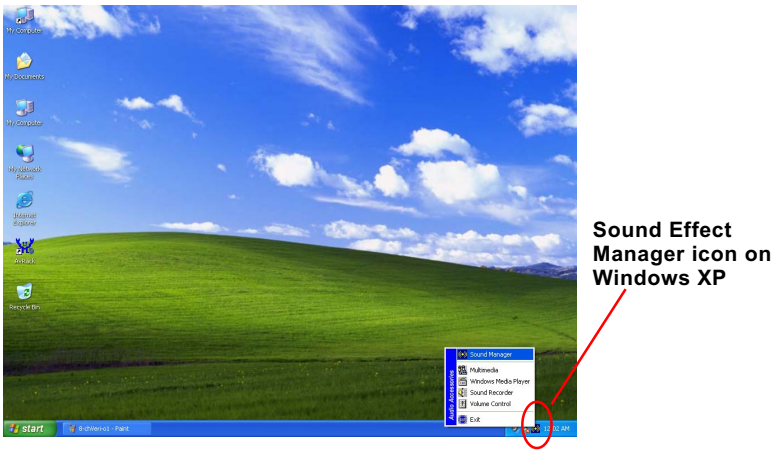

3. The AC'97 Audio Configuration" screen will pop out. Clikc the "Speaker Configuration" bar with your mouse.

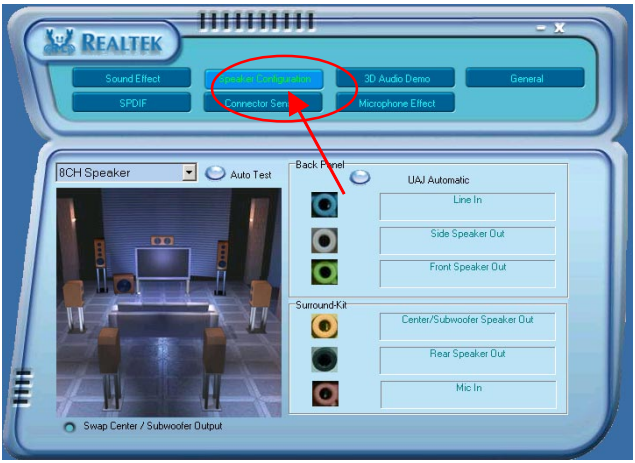


4. Instantly, the "Speaker Configuration" screen will pop out. Pick the items "8-channelSpeaker" and then click on the Auto Test button. Instantly, the Speaker Auto-test starts until all speakers installed are tested.

## 3-6 To Install RTL8110S Gigabit Ethernet Drivers

RTL8110S Gigabit LAN driver for Windows 98/ME / 2000 / XP. After restarting system, click on the Onboard Giga LAN Driver to start setup.

1. Instantly, the InstallShield Wizard pop out. Click Next to continue.

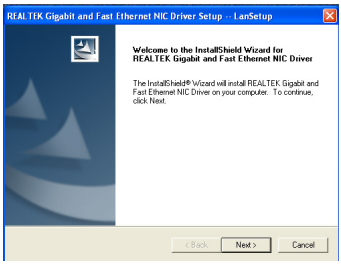


2. Next, the program starts to copy files.

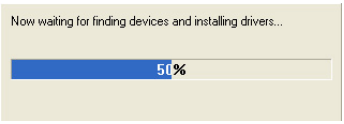


3. In a few seconds, setup completes. Restart system and complete setup.

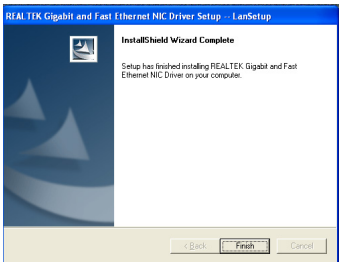

# 3-7 To Install Hardware Monitor Utility

## 3-7.1 Installation

Hardware Monitor is built on this mainboard. Its installation is programmed to a fully automated mode on Windows 2000/XP. Users can follow the model installation below for its installation on various Windows System.

1.Following the procedures of opening the Support CD, click to " Hardware Monitor Utility" to proceed.

2. The Soltek Hardware Monitor InstallShield Wizard will pop up to guide you to the Intel Service pack installation. Press **"Next"** button to continue.

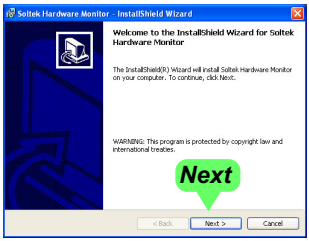


3. The **InstallShield Wizard** screen will show the current setting, please click the **"Install"** button to continue.

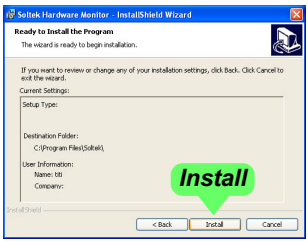


4. After all the setup process is finished, click "Finish" to exit the wizard.

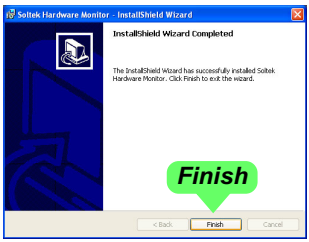

### 3-7.2 Verification

1. After installing Soltek Hardware Monitor, double click “SoltekHM” icon on the desktop to open the main window of the Soltek Hardware Doctor.

2. Then the pop-up screen will show all information about CPU Temperature, Fan Speed and various Voltages.

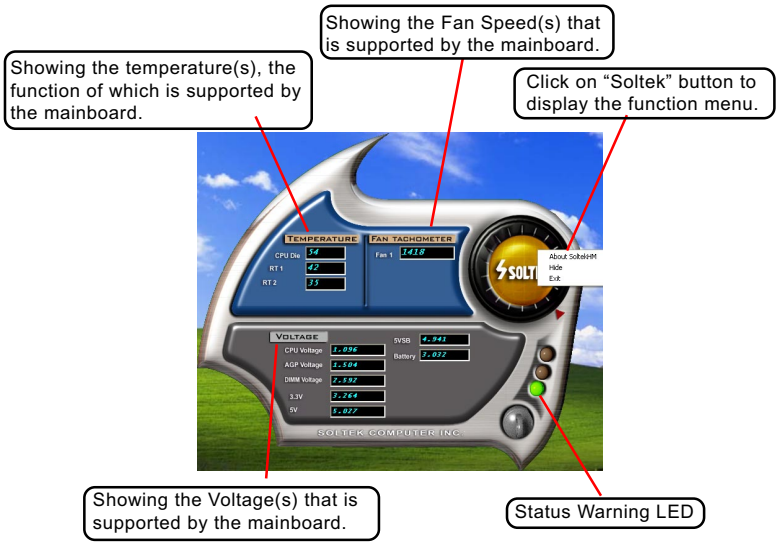


*Note: Not all items or functions showing in the above picture will show up. Only those items or functions that are supported by the mainboard will reveal themselves in the above screen.

## 3-8 To Install USB 2.0 Driver for Windows 2000/XP

USB V2.0 with its 480Mb/s transfer rate supports operating system Windows 2000 and Windows XP via the Windows 2000 and Windows XP Service Pack. For archieving Intel USB 2.0 support, users should install the latest Service Pack for Windows 2000 or Windows XP.

1. After installation of Intel Chipset software installation Utility in Windows 2000 or Windows XP, start to install the latest Service Pack version into the operating system. The installation of the latest Service Pack will support USB2.0 in Windows 2000 or Windows XP now.(The latest Service Pack can be found in Microsoft Web Site.)

2. To verify USB2.0 installation, please enter “Device Manager” of “My Computer”. On the “Device Manager” screen, you should be able to see the item “Standard Enhanced PCI to USB Host Controller”, verifying USB2.0 Driver is installed successfully.

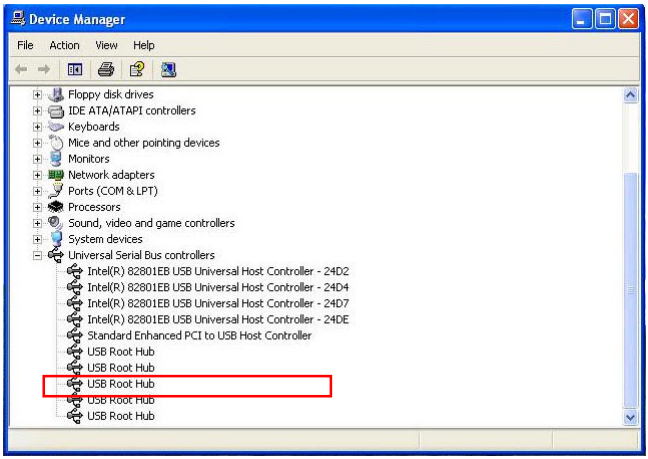


## 3-9 To Install SATA RAID Driver for Windows 2000/XP

SATA RAID driver for ICH6R RAID controller supports Windows 2000/XP only. To install this SATA RAID driver, please refer to Chapter 5 SATA RAID Driver installation.

# Chapter 4 AMI BIOS Setup

## THE BIOS

BIOS performs the following functions:

1. Initializing and testing hardware in your computer (a process called "POST", for Power On Self Test).
2. Loading and running your operating system.
3. Helping your operating system and application programs manage your PC hardware by means of a set of routines called BIOS Run-Time Service.

**This Chapter includes the following topics :**

**4-1 About BIOS Setup.....49**
**4-2 To Run BIOS Setup.....49**
**4-3 About CMOS.....49**
**4-4 The POST( PowerOn SelfTest ).....49**
**4-5 To Update BIOS.....50**
**4-6 BIOS SETUP --- CMOS Setup Utility.....51**

4-6.1 CMOS Setup Utility ..... 51
4-6.2 Standard BIOS Features ..... 53
4-6.3 Advanced BIOS Features ..... 54
4-6.4 Advanced Chipset Features ..... 69
4-6.5 PCI/PNP Resource Management ..... 73
4-6.6 Boot Configuration Features ..... 74
4-6.7. Boot Security Features ..... 77
4-6.8 Save Changes and Exit ..... 80
4-6.9 Discard Changes and Exit ..... 80
4-6.10 Load Optimal Defaults ..... 81
4-6.11 Discard Changes ..... 81

Attention: The BIOS Setup is subject to constant update without further notice to users. It is necessary for users to update the onboard BIOS by the latest BIOS version provided in our web site: www.soltek.com.tw

## 4-1 About BIOS Setup

BIOS stands for Basic Input and Output System. It was once called ROM BIOS when it was stored in a Read-Only Memory (ROM) chip Now manufacturers would like to store BIOS in EEPROM which means Electrically Erasable Programmable Memory. BIOS used in this series of mainboard is stored in EEPROM, and is the first program to run when you turn on your computer.

BIOS setup is an interactive BIOS program that you need to run when:

1. Changing the hardware of your system. (For example: installing a new Hard Disk etc.)
2. Modifying the behavior of your computer. (For example: changing the system time or date, or turning special features on or off etc.)
3. Enhancing your computer's behavior. (For example: speeding up performance by turning on shadowing or cache)

## 4-2 To Run BIOS Setup

First access BIOS setup menu by pressing < DEL > key after "POST" is complete ( before OS is loaded ). BIOS will then display the following message:

```
DEL:SETUP
```

## 4-3 About CMOS

CMOS is the memory maintained by a battery. CMOS is used to store the BIOS settings you have selected in BIOS Setup. CMOS also maintains the internal clock. Every time you turn on your computer, the BIOS Looks into CMOS for the settings you have selected and configures your computer accordingly. If the battery runs out of power, the CMOS data will be lost and POST will issue a "CMOS invalid" or "CMOS checksum invalid" message. If this happens, you have to replace the battery and check and configure the BIOS Setup for the new start.

## 4-4 The POST ( Power On Self Test )

POST is an acronym for Power On Self Test. This program will test all things the BIOS does before the operating system is started. Each of POST routines is assigned a POST code, a unique number which is sent to I/O port 080h before the routine is executed.

## 4-5 To Update BIOS

- System BIOS is incorporated into a Flash memory component. Flash BIOS allows user to upgrade BIOS without the need to replace an EPROM component.
- The Upgrade Utility can be loaded on a floppy diskette for upgrading saving, and verifying the system BIOS. The Update Utility can also be run from a hard disk drive or a network drive.

- Normally, to update BIOS is unnecessary if the system is working fine. Users should only update BIOS when incompatible problems are encountered or new features have to be added to system.

### • Please follow the steps below for updating the system BIOS:

Step 1. Please visit the board maker's website, download the zip files of the latest BIOS and AMI flash utility "**amiflash.exe**" for your mainboard. After unzipping, the BIOS file format will be *.ROM, of which " * " stands for the specific BIOS file name.

Step 2. Create a bootable diskette. Then copy the BIOS file and AMI flash utility "**amiflash.exe**" into the diskette.

Step 3. Insert the diskette into drive A, boot your system from the diskette.

Step 4. Under " A " prompt, type **" amiflash *.ROM "** and then press <Enter> to run BIOS update program. Please note that there should be a space between **amiflash** and ***.ROM**. (*.ROM depends on your mainboard model and version code. Instead of typing "*", you should type the specific file name for your specific mainboard). For example, you may type "amiflash MP005.rom".

Step 5. When the message "Flash ROM Update Completed - Pass." appears, please restart your system.

Step 6. You will see a message "CMOS Memory Size Wrong" during booting the system. Press <Del> or <F1> to run CMOS setup utility, then reload "Load Failsafe Defaults" or **"Load Optimal Defaults"** and save this change.

# 4-6 BIOS SETUP --- CMOS Setup Utility

## 4-6.1 CMOS Setup Utility

This mainboard comes with the AMI BIOS from American Megatrends Inc. Enter the CMOS Setup Utility Main Menu by:

1. Turn on or reboot your system. After a series of diagnostic checks, the following message will appear:

**PRESS <Del> TO RUN SETUP**

2. Press the <Del> key and the main program screen will appear as follows.

**CMOS Setup Utility - Copyright (C) 1985-2002, American Megatrends, Inc.**

| | |
|---|---|
| ▶ Standard BIOS Features | ▶ Save Changes and Exit |
| ▶ Advanced BIOS Features | Discard Changes and Exit |
| ▶ Advanced Chipset Features | Load Optimal Defaults |
| ▶ PCI/PNP Resource Management | Discard Changes |
| ▶ Boot Configuration Features | |
| ▶ BIOS Security Features | |

↑↓←→ : Move Enter : Select +/- : Values F10: Save Esc: Exit F1: General Help
F7 : Previous Values F8 : Fail-Safe Defaults F9: Optimize Defaults

Configure Time and Date. Display System Information ...

3. Use the arrow keys on your keyboard to select an option, and press <Enter>. Modify the system parameters to reflect the options installed in your system.
4. You may return to the Main Menu anytime by pressing <Esc>.
5. In the Main Menu, “Save Changes and Exit” saves your changes and reboots the system, and “Discard Changes and Exit” ignores your changes and exits the program.

6. In entering the Main option of the Main Menu, please use the functions in the Function List to configure the setting:

↑↓←→ : Move Enter : Select +/- : Values F10: Save Esc: Exit F1: General Help
F7 : Previous Values F8 : Fail-Safe Defaults F9: Optimized Defaults

Use [Enter], [Tab] or [Shift-Tab] to select a field.
Use [+] or [-] to choose the options.

<F1>: “General Help” provides explanations of the hot-key functions available.
<F7>: “Previous values” allows user to discard previous values or not.
<F8>: “Fail-safe defaults” allows user to load Fail-safe Defaults or not. Save and Exit Setup.
<F9>: “Optimized Defaults” alows user to load Optimal Defaults or not.

Attention: The BIOS Setup is subject to constant update without further notice to users. It is necessary for users to update the onboard BIOS by the latest BIOS version provided in our web site: www.soltek.com.tw

## 4-6.2 Standard BIOS Features

"Standard BIOS Features" allows users to configure Time and Date. This menu also displays system information.

Run the Standard BIOS Features as follows:
Choose "Standard BIOS Features" from the Main Menu and press <Enter>. The following screen will appear:

**CMOS Setup Utility - Copyright (C) 1985-2002, American Megatrends, Inc.**
**Standard BIOS Features**

| System Overview | Help Item |
|---|---|
| **AMIBIOS**<br>Version : XX.XX.XX<br>Build Date : 12/03/03<br>ID : 1ABRQ011<br>**Processor**<br>Type : Intel(R) Pentium(R) 4 CPU 1500MHz<br>Speed : 1500MHz<br>Count : 1<br>**System Memory**<br>Size : 256MB<br><br>**System Time** **00 : 19 : 29**<br>**System Date** **Thu 12/04/2003** | Use [Enter], [Tab] or [Shift-Tab] to select a field.<br><br>Use [+] or [-] to configure system Time. |

↑↓←→ : Move Enter : Select +/- : Values F10: Save Esc: Exit F1: General Help
F7 : Previous Values F8 : Fail-Safe Defaults F9: Optimized Defaults

### AMIBIOS/Processor/System memory

These three items only show the respective current statuses. They cannot be changed in the BIOS Setup.

### System Time

The BIOS shows the time of the day in the format: hh:mm:ss. Choose the field with the Arrow keys and change the time with the Page Up/Page Down +/- keys.

### System Date

The BIOS shows the date of the day in the format: mm:dd:yy :day of the Week. Choose the field with the Arrow keys and change the value with the Page Up/Page Down +/- keys.

## 4-6.3 Advanced BIOS Features

Advanced BIOS Features allows user to configure HDD, Floppy, Serial Port, Parallel Port etc....
Run the Advanced BIOS Features as follows:

Choose "Advanced BIOS Features" from the Main Menu and a screen with a list of options will appear:

**CMOS Setup Utility - Copyright (C) 1985-2002, American Megatrends, Inc.**
**Advanced BIOS Features**

| **Advanced Settings** | | **Help Item** |
|---|---|---|
| **Warning: Setting wrong values in below sections may cause system to malfunction.** | | |
| ▶ CPU Configuration | Press Enter | |
| ▶ IDE Configuration | Press Enter | |
| ▶ Floppy Configuration | Press Enter | |
| ▶ SuperIO Configuration | Press Enter | |
| ▶ Hardware Health Monitor | Press Enter | |
| ▶ ACPI Configuration | Press Enter | |
| ▶ Event Log Configuration | Press Enter | |
| ▶ PCI Express Configuration | Press Enter | |
| ▶ USB Configuration | Press Enter | |
| ▶ Voltage Control | Press Enter | |
| ▶ APM Power Management | Press Enter | |
| ▶ Soltek Performance Options | Press Enter | |
| ▶ PCI Device Configuration | Press Enter | |

↑↓←→ : Move Enter : Select +/- : Values F10: Save Esc: Exit F1: General Help
F7 : Previous Values F8 : Fail-Safe Defaults F9: Optimized Defaults

### 4-6.3.1 CPU Configuration

Choose “CPU Configuration” in “Advanced BIOS Features” and press <Enter>. The following sub-screen will appear for configuration:

**CPU Configuration**

| Configure advanced CPU settings<br>Module Version - xx.xx | | Help Item |
|---|---|---|
| Manufacturer : Intel | | |
| Brand String : Intel(R) Pentium (R) 4 CPU 1500MHz | | |
| Frequency : 1500MHz | | |
| FSB Speed : 400MHz | | |
| Cache L1 :16KB | | |
| Cache L2 :1024KB | | |
| Ratio Status: | Locked | |
| Ratio Actual Value | 14 | |
| Ratio CMOS Setting | 14 | |
| Max CPUID Value Limit | Disabled | |
| Hardware Prefetcher | Disabled | |
| Adjacent Cache Line Prefetch | Disabled | |
| Hyper Threading Technology | Enabled | |

**Module Version**
BIOS shows the current Module Version.

**Manufacturer**
BIOS shows the current manufacturer of on-board CPU.

**Brand String**
BIOS shows the current brand of on-board CPU.

**Frequency**
BIOS shows the current on-board CPU frequency.

**FSB Speed**
BIOS shows the current Front Side Bus of the on-board CPU.

**Cache L1/L2**
BIOS shows the actual CPU internal Level 1/2/3 cache size.

**Ratio Status**
BIOS shows the current ratio (multiplier) status of on-board CPU. For P4 CPUs, the ratio is usually locked.

**Ratio Actual Value**
BIOS shows the actual CPU ratio.

**Ratio CMOS Setting**
BIOS shows the CPU Ratio in CMOS. If an invalid ratio is set in CMOS, then actual and setpoint values may differ.

**Max CPUID Value Limit**
To enable/disable the Max CPU ID Value Limit.

**Hardware Prefetcher**
To enable/disable the hardware prefetcher.

**Adjacent Cache Line Prefetch**
To enable/disable the Adjacent Cache Line Prefetch.

**Hyper Threading Technology**
BIOS shows the current status of Hyper Threading Technology. If a Hyper Threading CPU is running on board, this item will show “Enabled” status. If a Hyper-threading CPU is not on-board, this item shows “Disabled”.

## 4-6.3.2 IDE Configuration

Choose “IDE Configuration” in “Advanced BIOS Features” and press <Enter>. The following sub-screen will appear for IDE Devices configuration:

**IDE Configuration**

| IDE Configuration | | Help Item |
|---|---|---|
| ATA/IDE Configuration | Enhanced | |
| Configure SATA as | IDE | |
| ▶ Primary IDE Master | Hard Disk | |
| ▶ Primary IDE Slave | ATAPI CDROM | |
| ▶ Secondary IDE Master | Not Detected | |
| ▶ Secondary IDE Slave | Not Detected | |
| ▶ Third IDE Master | Not Detected | |
| ▶ Third IDE Slave | Not Detected | |
| Hard Disk Write Protect | Disabled | |
| IDE Detect Time Out (Sec) | 35 | |
| ATA(PI) 80Pin Cable Detection | Host & Device | |
| S-ATA Detection Delay | Enabled | |

### 4-6.3.2-1 ATA/IDE Configuration

**ATA/IDE Configuration**

Allows you to configurare IDE device mode.
Choices: Disabled; Compatible; Enhanced

**Disabled: If disabled, no Primary/Secondary IDE mode will be presented for configuration.**

**Compatible: If Compatible selected, Legacy IDE Channels will be presented for configuration.**

**Enhanced: If Enhanced selected, Configure SATA as mode will be presented for configuration.**

**Configure SATA As:**

This item allows you to configure SATA mode
Choices: IDE;
RAID (for ICH6R only);
AHCI: If AHCI is chosen, it allows you to enable the Stagger Spinup Support and take all hard disks on board as master.

### 4-6.3.2-2 Primary/Secondary IDE Master/Slave and Third IDE Master/ Slave

| | |
|---|---|
| ▶ Primary IDE Master | Hard Disk |
| ▶ Primary IDE Slave | ATAPI CDROM |
| ▶ Secondary IDE Master | Not Detected |
| ▶ Secondary IDE Slave | Not Detected |
| ▶ Third IDE Master | Not Detected |
| ▶ Third IDE Slave | Not Detected |

If any IDE device is detected in any one of the above items press <Enter> to reveal the IDE information:

**Primary/(Secondary/Third/Fourth) IDE Master/(Slave)**

| Primary/(Secondary/Third/Fourth) IDE Master/(Slave) | | Help Item |
|---|---|---|
| Device : Hard Disk<br>Vendor : WDC WD400BB-00DEA0<br>Size : 40.0GB<br>LBA Mode : Supported<br>Block Mode : 16Sectors<br>PIO Mode : 4<br>Async DMA : MultiWord DMA-2<br>Ultra DMA : Ultra DMA-5<br>S.M.A.R.T. : Supported | | Select the type of device connected to the system. |
| Type | Auto | |
| LBA/Large mode | Auto | |
| Block (Multi-Sector Transfer) | Auto | |
| PIO Mode | Auto | |
| S.M.A.R.T. | Auto | |
| 32Bit Data Transfer | Disabled | |

**Type**

To select the types of the IDE devices:
Not Installed;
Auto: Setting type automatically
CD-ROM: ATAPI (Packet Interface) CD-ROM drive
ARMD: ATAPI Removable Media Device

**LBA/Large mode**

To select or disable LBA/Large mode.

**Block (Multi-Sector Transfer)**

To select or disable Block Mode. The data transfer from and to the device occurs one sector or multiple sectors at a time.

**PIO Mode**

To select or disable PIO Mode.
Choices: Disabled; 1, 2, 3, 4

**DMA Mode**

To select DMA Mode.
Choices: Auto; SWDMAn; MWDMAn; UDMAn

**S.M.A.R.T**

Allows you to enable / disable the Self Monitoring Analysis and Reporting Technology for the hard disk.

**32Bit Data Transfer**

To auto-select (default) or disable 32Bit Data Transfer.

### 4-6.3.2-3 Hard Disk Write Protect

**Hard Disk Write Protect**

Allows you to Enabled / Disable(default) Hard Disk Write Protection

### 4-6.3.2-4 IDE Detect Time Out

**IDE Detect Time Out(Sec)**

Allows you to set time out for IDE Detection.
Choices: 0 ~ 35 seconds in 5 seconds stepping

### 4-6.3.2-5 ATA(PI) 80Pin Cable Detection

**ATA(PI) 80Pin Cable Detection**

Allows you to select ATA(PI) devices for 80Pin Cable Detection. To set Host & Device allows onboard IDE controller and IDE disk drive to detect the type of IDE cable used.
Choices: Host & Device, Host, Device

### 4-6.3.2-6 S-ATA Detection Delay

**S-ATA Detection Delay**

Allows you to enable/disable the S-ATA Detection Delay function. Detection.
Choices: Enabled; Disabled

## 4-6.3.3 Floppy Configuration

Choose “Floppy Configuration” in “Advanced BIOS Features” and press <Enter>. The following sub-screen will appear for configuration:

**Floppy Configuration**

| Floppy Configuration | | Help Item |
|---|---|---|
| Floppy A | 1.44 MB 3.5 in | Select the type of floppy drive connected to the system. |
| Floppy B | Disabled | |

**Floppy A/B**

Press Enter on “Floppy A/B” will let you select this field to the types of floppy disk drives installed in your system.

The choices are: 360KB 5.25 in.; 1.2MB, 5.25 in.
720KB, 3.5 in.; 1.44MB, 3.5 in.
2.88MB, 3.5 in.; Disabled

## 4-6.3.4 Super IO Configuration

Choose “SuperIO Configuration” in “Advanced BIOS Features” and press <Enter>. The following sub-screen will appear for configuration:

**SuperIO Configuration**

| Configure ITE8712 Super IO Chipset | | Help Item |
|---|---|---|
| OnBoard Floppy Controller | Enabled | |
| Floppy Drive Swap | Disabled | |
| Serial Port1 Address | 3F8/IRQ4 | |
| Serial Port1 Mode | Normal | |
| Serial port2 Address | 2F8/IRQ3 | |
| Serial port2 Mode | Normal | |

### OnBoard Floppy Controller

Allows you to enable / disable the Onboard Floppy Controller.
Choices: Enabled; Disabled

### Floppy Drive Swap

Allows you to enable / disable the Floppy Drive Swap function..
Choices: Enabled; Disabled

### Serial Port1/2 Address

Allows you to set the Onboard Serial Port1/2 Address.
Choices: Disabled; 2E8/IRQ3; 3F8/IRQ4; 3E8/IRQ4;

### Serial Port 1/2 Mode

If Serial Port2 Address is not disabled, it allows you to set the Serial Port 2 Mode. Choices:
-- Normal;
-- IrDA: Providing 2 items for configuration:
IR I/O Pin Select: SINB/SOUTB; IRRX/IRTX
IR Duplex Mode: Half Duplex; Full Duplex
-- ASK IR: Providing 2 items for configuration:
IR I/O Pin Select: SINB/SOUTB; IRRX/IRTX
IR Duplex Mode: Half Duplex; Full Duplex

## 4-6.3.5 Hardware Health Monitor

Choose “Hardware Health Monitor” in “Advanced BIOS Features” and press <Enter>. The following sub-screen will appear for configuration:

**Hardware Health Monitor**

| Hardware Health Monitor | | Help Item |
|---|---|---|
| CPU FAN(4PIN) Mode Setting | Automatic mode | Enables Hardware Health Monitoring Device. |
| CPU FAN(4PIN) Limit of Off | 000 | |
| CPUFAN(4PIN) Limit of Start | 020 | |
| CPU FAN(4PIN) Limit of Full | 065 | |
| CPU FAN(4PIN) Start PWM | 049 | |
| Slope PWM 1 | 0 PWM | |
| CPU FAN(3PIN) Mode Setting | Automatic mode | |
| CPU FAN(3PIN) Limit of Off | 000 | |
| CPUFAN(3PIN) Limit of Start | 020 | |
| CPU FAN(3PIN) Limit of Full | 065 | |
| CPU FAN(3PIN) Start PWM | 070 | |
| Slope PWM 1 | 0 PWM | |
| System FAN Mode Setting | Automatic mode | |
| System FAN Limit of Off | 000 | |
| System FAN Limit of Start | 020 | |
| System FAN Limit of Full | 050 | |
| System FAN Start PWM | 070 | |
| Slope PWM 1 | 0 PWM | |
| System Temperature | :34˚C/93˚F | |
| CPU Temperature | :45˚C/113˚F | |
| CPU FAN(4PIN) Speed | :3515 RPM | |
| CPU Fan(3PIN) Speed | :N/A | |
| System Fan Speed | :3169 RPM | |
| CPU Voltage | :1.360 V | |
| DIMM Voltage | :2.576 V | |
| +3.30V | :3.258 V | |
| Vcc5 | :5.094V | |
| +12.0V | :12.074 V | |
| Vcc1.5 | :1.504 V | |
| 5VSB | :5.088 V | |
| VBAT | :3.136 V | |

↑↓←→ : Move Enter : Select +/- : Values F10: Save Esc: Exit F1: General Help
F7 : Previous Values F8 : Fail-Safe Defaults F9: Optimized Defaults

### CPU FAN(4PIN) / CPU FAN(3 PIN) / System FAN Mode Setting

To select and set up the cooling fan mode.
Choices:
Automatic mode: There are 5 settings for Automatic mode:

(1) CPU/System Fan Limit of Off:
Fan will stop when CPU/system temperature is lower than the Off Limit.
To set Temperature Off Limit, Min=0; Max=127$^{0}$C;
Key in a decimal number for Off Limit.

(2) CPU/System Fan Limit of Start:
Fan will spin in a Start PWM value when CPU/System temperature exceeds the Start Limit.
To set Temperature Limit of Start, Min=0; Max=127$^{0}$C;
Key in a decimal number for Start Limit.

(3) CPU/System Fan Limit of Full:
Fan speed will be full on when CPU/System temperature exceeds Full Limit.
To set Full Temperature Limit, Min=0; Max=127$^{0}$C;
Key in a decimal number for Full Temperature Limit.

(4) CPU/System Fan Start PWM:
PWM is the Power Management level of a smart fan.
To set a Start PWM, Min=0 (Level); Max=127(Level);
Key in a decimal number for Start PWM Level.

(5) Slope PWM 1/2/3
Slope PWM is the Power Management Grading of the CPU/System Fan.
Press Enter to choose a PWM value for the CPU/System Fan PWM.
Choices: 0 PWM; 1 PWM; 2 PWM; 4 PWM; 8 PWM; 16 PWM; 32 PWM; 64 PWM

Full On mode: Full On mode for CPU/System Fan mode setting will not allow manual setting of temperature limits.

PWM Manually mode: PWM Manually mode will allow manual setting of CPU/System Fan PWM Control.
To set a Start PWM, Min=0 (Level); Max=127(Level);
Key in a decimal number for Start PWM Level.

### System Temperature

Shows current system temperature.

### CPU Temperature

Shows current CPU internal temperature.

### CPU Fan (4PIN)/(3PIN) Speed

Shows the CPU Fan speed.

### System Fan Speed

Shows the System Fan speed.

### CPU Voltage/DIMM Voltage

Showing the Running CPU / DIMM voltage value.

### 3.3V/Vcc5/+12V/Vcc1.5 /5VSB/Battery

Showing current voltage against the 3.3V/+12V/Vcc1.5V/5VSB/Battery power supply.

### 4-6.3.6 ACPI Configuration

Choose “ACPI Configuration” in “Advanced BIOS Features” and press <Enter>. The following sub-screen will appear for ACPI configuration:

**ACPI Configuration**

| ACPI Settings | | Help Item |
|---|---|---|
| ▶ General ACPI Configuration | Press Enter | |
| ▶ Advanced ACPI Configuration | Press Enter | |
| ▶ Chipset ACPI Configuration | Press Enter | |

## ▶ General ACPI Configuration:

Press< Enter > on General ACPI Configuration to reveal following items.

**Suspend mode**

This item allows you to select the Suspend mode. You can select S3(STR) for suspending to DRAM if your system supports this mode. Or you can select S1 (POS) for Power on Suspend under ACPI mode.
Choices: S1(POS); S3(STR)

## ▶ Advanced ACPI Configuration:

Press< Enter > on Advanced ACPI Configuration to reveal following.

**ACPI 2.0 Features**

To enable / disable ACPI (Advanced Configuration and Power Interface) 2.0 Support function.
Choices: Yes; No

**ACPI APIC Support**

Allows you to enable / disable ACPI APIC (Advanced Programmable Interrupt Controller) Support function.

**AMI OEMB table**

To include AMI OEBM table pointer to R(X) SDT pointer lists.

**Headless mode**

To enable / disable Headless operation mode through ACPI.

## ▶ Chipset ACPI Configuration:

Press< Enter > on Chipset ACPI Configuration to reveal following.

**APIC ACPI SCI IRQ**

To enable / disable APIC ACPI SCI IRQ.

**USB Device Wakeup From S3/S4**

This item allows you to enable / disable the USB device Wakeup function from S3/S4 mode.

## 4-6.3.7. Event Log Configuration

Choose “Event Log Configuration” in “Advanced BIOS Features” and press <Enter>. The following sub-screen will appear for configuration:

**Event Log Configuration**

| Event Logging details | | Help Item |
|---|---|---|
| View Event Log | Press Enter | |
| Mark all events as read | Press Enter | |
| Clear Event Log | Press Enter | |
| Event Log Statistics | Press Enter | |

**View Event Log**

To press Enter to reveal the Event Log. For Example:

**01/02/02 03:05:16**
Keyboard not functional

**Mark all events as read**

Press Enter to mark up all events as read. Example:

**Mark all events as read now?**

[OK] [Cancel]

**Clear Event Log**

Press Enter to clear event log.

**Clear Event Log now?**

[OK] [Cancel]

**Event Log Statistics**

Press Enter to reveal Event Log Statistics.

**Event Log Statistics**
**Total size (in events)**
**63**
**Free size (in events)**
**63**
**unread events**
**00**

## 4-6.3.8. PCI Express Configuration

Choose “PCI Express Configuration” in “Advanced BIOS Features” and press <Enter>. The following sub-screen will appear for configuration:

**PCI Express Configuration**

| PCI Express Configuration | | Help Item |
|---|---|---|
| Active State Power management | Disabled | |

**Active State Power Management**
To enable / disable Active State Power Management.

## 4-6.3.9. USB Configuration

Choose “USB Configuration” in “Advanced BIOS Features” and press <Enter>. The following sub-screen will appear for configuration:

**USB Configuration**

| USB Configuration | | Help Item |
|---|---|---|
| Module Version - 2.23.2-9.4 | | Enable USB host controllers. |
| USB Devices Enabled : None | | |
| USB Function | 8 USB Ports | |
| Legacy USB Support | Enabled | |
| USB 2.0 Controller | Enabled | |
| USB 2.0 Controller Mode | Full Speed | |

**USB Function**
Allows you to set the USB Function on the USB port(s).
Choices: 8 USB Ports; Disabled

**Legacy USB Support**
Allows you to enable / disable the Legacy USB support.

**USB 2.0 Controller**
Allows you to enable/ disable the USB 2.0 Controller.

**USB 2.0 Controller Mode**
Allows you to configure the USB 2.0 Controller Mode.
Choices: FullSpeed; HiSpeed.

## 4-6.3.10. Voltage Control

Choose "ATXP6 Voltage Control" in "Advanced BIOS Features" and press <Enter>. The following sub-screen will appear for configuration:

**Voltage Control**

| Voltage Configuration | | Help Item |
|---|---|---|
| Chipset Voltage Control | 1.5V | |
| DIMM Voltage Control | 2.6V | |
| CPU Voltage Control | Auto | |

↑↓←→ : Move Enter : Select +/- : Values F10: Save Esc: Exit F1: General Help
F7 : Previous Values F8 : Fail-Safe Defaults F9: Optimized Defaults

### Core Voltage Control

Allows you to configure the AGP Voltage.
Choices: 1.5V; 1.6V; 1.7V; 1.8V

### DIMM Voltage Control

Allows you to configure the DIMM Voltage.
Choices: 2.6V; 2.7V; 2.8V; 2.9V

### CPU Voltage Control

Allows you to configure the CPU Voltage. Usually, to raise CPU voltage will raise the chance of CPU overclocking and yet risk damage of CPU.
Choices: Auto; 0.8500V ~1.6000V in 0.0125V stepping

## 4-6.3.11 APM Power Management

Choose "APM Power Management" in "Advanced BIOS Features" and press <Enter>. The following sub-screen will appear for configuration:

**APM Power Management**

| APM Configuration | | Help Item |
|---|---|---|
| Power Management/APM | Enabled | |
| Video Power Down Mode | Suspend | |
| Hard Disk Power Down Mode | Suspend | |
| Standby Time Out | Disabled | |
| Suspend Time Out | Disabled | |
| Keyboard & PS/2 Mouse | Monitor | |
| FDC/LPT/COM Ports | Monitor | |
| Primary Master IDE | Monitor | |
| Primary Slave IDE | Monitor | |
| Secondary Master IDE | Monitor | |
| Secondary Slave IDE | Monitor | |
| Power Button Mode | On/Off | |
| Resume On Ring | Disabled | |
| Resume On LAN | Disabled | |
| Resume On PME# | Disabled | |
| Resume On RTC Alarm | Disabled | |

↑↓←→ : Move Enter : Select +/- : Values F10: Save Esc: Exit F1: General Help
F7 : Previous Values F8 : Fail-Safe Defaults F9: Optimized Defaults

### Power Management/APM

Allows you to enable / disable APM (Advanced Power Management).

### Video Power Down Mode

To power down video to Suspend or Standby mode.
Choices: Disabled; Suspend; Standby

### Hard Disk Power Down Mode

To power down Hard Disk to Suspend or Standby mode.
Choices: Disabled; Suspend; Standby

### Standby Time Out

This item allows you to select the time for Standby Time Out mode..
Choices: Disabled; 1 min; 2 min; 4 min; 8 min; 10 min; 20 min; 30 min; 40 min; 50 min; 60 min

### Suspend Time Out

This item allows you to select the time for Suspend Time Out mode..
Choices: Disabled; 1 min; 2 min; 4 min; 8 min; 10 min; 20 min; 30 min; 40 min; 50 min; 60 min

### Keyboard & PS/2 Mouse

To ignore or monitor the Keyboard & PS/2 Mouse with Power Management/APM.
Choices: Ignore; Monitor

### FDC/LPT/COM Ports

To ignore or monitor the FDC/LPT/COM ports with Power Management/APM.
Choices: Ignore; Monitor

### Primary Master/Slave IDE

To ignore or monitor the Primary Master/Slave IDE with Power Management/APM.
Choices: Ignore; Monitor

### Secondary Master/Slave IDE

To ignore or monitor the Secondary Master/Slave IDE with Power Management/APM.
Choices: Ignore; Monitor

### Power Button Mode

To select the Power Button function.
Choice: On/Off; Suspend

### Resume On Ring / LAN / PME# / RTC Alarm

To enable / disable the Resume on Ring / LAN / PME# / RTC(Real lime Clock) alarm.
Choices:Disabled; Enabled

## 4-6.3.12. Soltek Performance Options

Choose “Soltek Performance Options” in “Advanced BIOS Features” and press <Enter>. The following sub-screen will appear for configuration:

**Soltek Performance Options**

| Soltek Performance Configuration | | Help Item |
|---|---|---|
| CPU FSB Selection | Auto | |
| CPU Linear Frequency | Enabled | |
| CPU Clock | 200MHz | |
| Smart Acceleration Technology(optional) | Disabled | |

### CPU FSB Selection

This item allows you to select CPU Front Side Bus.
Choices: Auto (Auto-selection); 133MHz; 200MHz

### CPU Linear Frequency

To enable / disable CPU Linear Frequency adjusment.
Choices: Enabled; Disabled;

### CPU Clock

If CPU Linear Frequency is enabled, this item “CPU Clock” will appear to allow you to adjust (with “+/-” key) CPU clock in linear format.
Choices: 200 ~350 MHz in 1MHz stepping

### Smart Acceleration Technology

If CPU Linear Frequency is disabled, this item “Smart Acceleration Technology” will appear to allow you to enable the CPU dynamic overclocking. If enabled, a running CPU onboard will dynamically (automatically) adjust its own CPU performance during necessary or appropriate conditions.
Choices: Disabled;
Enhanced Mode;
Performance Mode;
Maximum Mode

## 4-6.3.13. PCI Device Configuration

Choose “PCI Device Configurationl” in “Advanced BIOS Features” and press <Enter>. The following sub-screen will appear for configuration:

**PCI Device Configuration**

| PCI Device management Options | | Help Item |
|---|---|---|
| PCI Auto Detection feature | Enabled | |
| ClockGen Spread Spectrum | Disabled | |
| IEEE1394 | Enabled | |
| GIGA LAN | Enabled | |

### PCI Auto Detection feature

To enable / disable the PCI auto-detection feature.
Choices: Enabled; Disabled

### ClkGen Spread Spectrum

To set the Clock Generation Spread Spectrum.
Choices: Disabled; -0.25%; -0.50%; 0.125%; 0.250%; 0.375%; 0.500%; 0.750%

### IEEE1394

To enable / disable the IEEE1394 interface.

### GIGA LAN

To enable / disable the Gigabit LAN interface.

## 4-6.4 Advanced Chipset Features

Advanced Chipset Features is used to modify the values of chipset buffers. These buffers control the system options.

Run the Advanced Chipset Features as follows:
Choose “Advanced Chipset Features” from the Main Menu and a list of option will appear:

**CMOS Setup Utility - Copyright (C) 1985-2002, American Megatrends, Inc.**
**Advanced Chipset Features**

| **Advanced Chipset Settings** | | **Help Item** |
|---|---|---|
| **Warning: Setting wrong values in below sections may cause system to malfunction.** | | Options for NBEnable USB host controllers. |
| ▶ NorthBridge Configuration | Press Enter | |
| ▶ SouthBridge Configuration | Press Enter | |

↑↓←→ : Move Enter : Select +/- : Values F10: Save Esc: Exit F1: General Help
F7 : Previous Values F8 : Fail-Safe Defaults F9: Optimized Defaults

### 4-6.4.1 NorthBridge Configuration

Choose "NorthBridge Configuration" in "Advanced Chipset Features" and press <Enter>. The following sub-screen will appear for configuration:

**North Bridge Configuration**

| North Bridge Chipset Configuration | | Help Item |
|---|---|---|
| DRAM Frequency | Auto | |
| Configure DRAM Timing by SPD | Enabled | |
| Memory Hole | Disabled | |
| Boots Graphic Adapter Priority | PEG/PCI | |
| Internal Graphics Mode Select | Enabled, 8MB | |
| Graphics Aperture Size | 256MB | |
| PEG Port Configuration | | |
| PEG Port | Enabled | |
| PEG Port VC1/Map | Enabled/TC7 | |
| PEG Force x1 | Disabled | |
| Video Function Configuration | Press Enter | |

**DRAM Frequency** Allows you to set the current SDRAM frequency.
Choices: Auto; 333MHz; 400MHz

**Configure SDRAM Timing by SPD**

SPD (Serial presence detect) is a device in memory module for storing the module information such as DRAM timing and chip parameters. If this option is enabled, BIOS will access SPD automatically to configure module timing. If disabled, the following items will appear for user's configuration:

**DRAM CAS# Latency**

With SDRAM Timing by SPD disabled, you can select the SDRAM CAS# (Column Address Strode)latency manually.
Choices: 2 Clocks; 2.5 Clocks; 3 Clocks

**DRAM RAS# to CAS# Delay**

With SDRAM Timing by SPD disabled, you can select the SDRAM RAS# to CAS# delay cycle manually.
Choices: 2 DRAM Clocks; 3 DRAM Clocks; 4 DRAM Clocks; 5 DRAM Clocks

**DRAM RAS# Precharge**

With SDRAM Timing by SPD disabled, you can select the SDRAM RAS# (Row Address Strode)Precharge cycle manually.
Choices: 2 Clocks; 3 Clocks; 4 Clocks; 5 Clocks

**DRAM RAS# Activate to Prec**

Allows you to set the DRAM RAS Activate to Precharge cycle.
Choices: 4 Clocks ~15 Clocks with 1 clock stepping

**Memory Hole**
Allows you to enable / disable (default) the support of Memory Hole which is reserved for ISA card.
Choices: Disabled; 15MB-16MB

**Boots Graphic Adapter Priority**
Select which graphics controller to use as the primary boot device.
Choices: IGD; PEG(PCI Express Graphics)/IGD; PEG/PCI; PCI/PEG; PCI/IGD

**Internal Graphics Mode Select**
Select the amount of system memory used by the Internal Graphics device.
Choices: Disabled; Enabled, 1MB; Enabled, 8MB

**Aperture Size Select**
To select the Aperture size of the Graphics adapter.
Choices: 256MB; 128MB

**PEG(PCI Express Graphics) Port Configuration:**

**PEG Port**
To enable / disable the PEG port.

**PEG Port VC1/Map**
To select / disable the PEG Port VC1/Map.
Choices: Disabled; Enabled/TC1; Enabled/TC2; Enabled/TC3; Enabled/TC4; Enabled/TC5; Enabled/TC6; Enabled/TC7

**PEG Force x1**
To enable / disable PEG Force x1

**Video Function Configuration: Press Enter to show the following items:**

**DVMT Mode Select**
To select the video mode.
Choices: Fixed mode; DVMT mode; Combo mode

**Boot Display Device**
To select the Boot Display device.
Choices: Auto; CRT on Port0; LFP on Port 2;LFP on Port3;
DFP on Port2; DFP on Port3; TV on Port2; TV on Port3;
CRT-Port 0 & CRT-Port2; CRT-Port 0 & CRT-Port3;
CRT-Port 0 &LFP-Port2; CRT-Port 0 & LFP3;
CRT-Port 0 & DFP-Port2; CRT-Port 0 & DFP-Port3;
DFP-Port2 & DFP-Port3

**Flat Panel Type**
To select the Flat Panel Type.
Choices: Type 1~ Type 16 (totally 16 types)

**Local Flat Panel Scaling**
To set the local flat panel scaling
Choices: Auto; Forced Scaling; Disabled

**TV Connector**
To select the TV connector.
Choices: Auto; Composite; Component; Composite & Component; SCART Composite; SCART Component; SCART Compos & Compon; SCART Compos & Compon RGB; HDTV Serial; HDTV Component; HDTV Component RGB; HDTV PnP HDMI

**HDTV Output**
To select the HDTV Output mode.
Choices: Auto; 480i60; 480p60; 576i50; 576p50; 720p60; 1080i50 1080i60; 1080p24; 1080p25; 1080p30; 1080p50; 1080p60

**TV Standard**
To select the TV standard.
Choices: VBIOS-default; NTSC; PAL; SECAM; SMPTE240M; SMPTE260M; SMPTE274M; SMPTE295M; SMPTE296M; SMPTE293M; SMPTE170M; ITURBT601

## 4-6.4.2 SouthBridge Configuration

Choose “SouthBridge Configuration” in “Advanced Chipset Features” and press <Enter>. The following sub-screen will appear for configuration:

**SouthBridge Configuration**

| South Bridge Chipset Configuration | | Help Item |
|---|---|---|
| AC’97 Selection | Auto | |
| PRO-NIC Controller | Enabled | |
| SMBUS Controller | Enabled | |
| CHAP Controller | Disabled | |
| Reserved Page Route | LPC | |
| SLP_S4# Min. Assertion Width | 2 to 3 seconds | |
| Restore on AC Power Loss | Power Off | |
| VC1 for Azalia & Root Ports | Disabled | |

**AC’97 Selection**
To auto-select or disable Audio Codec on board.
Choices: Disabled; Auto

**PRO-NIC Controller**
To enable / disable PRO-NIC Controller.

**SMBUS Controller**
To enable / disable SMBUS Controller.

**CHAP Controller**
To enable / disable the CHAP Controller

**Reserved Page Route**
To select the reservered Page route.
Choices: PCI; LPC

**SLP_S4# Min. Assertion Width**
To select the SLP_S4# Min. Assertion Width.
Choices: 4 to 5 seconds; 3 to 4 seconds; 2 to 3 seconds; 1 to 2 seconds

**Restore on AC Power Loss**
To select the Restore on AC Power Loss mode.
Choices: Power Off; Power On; Last State

**VC1 for Azalia & Root Ports**
To enable / disable VC1 for Azalia & Root Ports.

## 4-6.5 PCI/PNP Resource Management

PCI/PNP Resource Management allows you to modify the system's power saving functions.

Choose "PCI/PNP Resource Management" from the Main Menu and a screen with a list of options will appear:

**CMOS Setup Utility - Copyright (C) 1985-2002, American Megatrends, Inc.**
**PCI/PNP Resource Management**

| Advanced PCI/PNP Settings | | Help Item |
|---|---|---|
| **Warning: Setting wrong values in below sections may cause system to malfunction.** | | |
| Clear NVRAM | No | |
| Plug & Play O/S | No | |
| PCI Latency Timer | 64 | |
| Allocate IRQ to PCI VGA | Yes | |
| Palette Snooping | Disabled | |
| PCI IDE BusMaster | Enabled | |
| OffBoard PCI/ISA IDE Card | Auto | |
| IRQ3 | Available | |
| IRQ4 | Available | |
| IRQ5 | Available | |
| IRQ7 | Available | |
| IRQ9 | Available | |
| IRQ10 | Available | |
| IRQ11 | Available | |
| IRQ14 | Available | |
| IRQ15 | Available | |
| DMA Channel 0 | Available | |
| DMA Channel 1 | Available | |
| DMA Channel 3 | Available | |
| DMA Channel 5 | Available | |
| DMA Channel 6 | Available | |
| DMA Channel 7 | Available | |
| Reserved Memory Size | Disabled | |

↑↓←→ : Move Enter : Select +/- : Values F10: Save Esc: Exit F1: General Help
F7 : Previous Values F8 : Fail-Safe Defaults F9: Optimized Defaults

### Clear NVRAM
To select the Clear NVRAM during system boot.
Choices: No; Yes

### Plug & Play O/S
Allows you to configure the PNP devices by BIOS or O/S.
Choices: No; Yes

### PCI Latency Timer (PCI Clocks)
Allows you to set the PCI Latency Time.
Choices: 32; 64; 96;128; 160; 192; 224; 248;

### Allocate IRQ to PCI VGA
Allows you to assign IRQ to PCI VGA card if card requests IRQ.
Choices: Yes; No

**Palette Snooping**
This option allows the BIOS to preview VGA status, and to modify the information delivered from the feature Connector of the VGA card to MPEG card. This option can solve the display inversion to black after you have used a MPEG card.

**PCI IDE BusMaster**
Allows you to enable / disable(default) the PCI IDE Bus Master function.

**OffBoard PCI/ISA IDE Card**
Some PCI IDE cards may require this to be set to the PCI slot number that is holding the card.
Choices: Auto; PCI Slot1; PCI Slot2;

**IRQ 3/4/5/7/9/10/11/14/15**
Allows you to specify available IRQs to be used by PCI/PNP devices.
Choices: Available(default); Reserved

**DMA 0/1/3/5/6/7**
Allows you to specify available DMAs to be used by PCI/PNP devices.
Choices: Available(default); Reserved

**Reserved Memory Size**
Allows you to specify memory size to reserve for legacy ISA devices.
Choices: Disabled(default); 16K; 32K; 64K

## 4-6.6 Boot Configuration Features

Boot Configuration Setup allows you to modify the system's boot settings.

Choose "Boot Configuration Features" from the Main Menu and a screen with a list of options will appear:

**CMOS Setup Utility - Copyright (C) 1985-2002, American Megatrends, Inc.**
**Boot Configuration Setup**

| Boot Settings | | Help Item |
|---|---|---|
| ▶Boot Setting Configuration | Press Enter | Configure Settings during System Boot. |
| ▶Boot Device Priority | Press Enter | |
| ▶Hard Disk Drives | Press Enter | |
| ▶Removable Drives | Press Enter | |
| ▶CD/DVD Drives | Press Enter | |

↑↓←→ : Move Enter : Select +/- : Values F10: Save Esc: Exit F1: General Help
F7 : Previous Values F8 : Fail-Safe Defaults F9: Optimized Defaults

### 4-6.6.1 Boot Settings Configuration

Choose “Boot Settings Configuration” in “Boot Configuration Setup” and press <Enter>. The following items will appear for onfiguration:

**Boot Configuration Setup**

| Boot Settings | | Help Item |
|---|---|---|
| Quick Boot | Enabled | |
| Quiet Boot | Disabled | |
| AddOn ROM Display Mode | Force BIOS | |
| Bootup Num-Lock | On | |
| PS/2 Mouse Support | Auto | |
| Wait For ‘F1’ If Error | Enabled | |
| Hit ‘DEL’ Message Display | Enabled | |
| Interrupt 19 Capture | Disabled | |

**Quick Boot**

Allows you to enable (default)/ disable quick boot of your system. If enabled, BIOS will skip certain tests whle booting. This will decrease the time needed to boot the system.

**Quiet Boot**

The bootup screen displays normal POST messages with Disabled selected; the bootup screen displays OEM Logo instead of POST messages with Enabled selected.
Choices: Enabled; Disabled

**AddOn ROM Display Mode**

If “Force BIOS” is chosen, the vendor’s logo screen will be followed by the “AddOn ROM” initial screen (the screen showing the add-on card BIOS message). If “Keep Current” is chosen, no “Add-On ROM” screen is followed.
Choices: Force BIOS; Keep Current

**Bootup Num-lock**

Allows you to toggle between On or Off to control the state of the NumLock keys when the system boots. If On, the numeric keypad is in numeric mode. If off, the numeric keypad is in cursor control mode.

**PS/2 Mouse Support**

Enabled (default), PS/2 mouse is supported. Disabled, PS/2 Mouse is not supported. If “Auto” is set, the system will auto detect the PS/2 Mouse.

**Wait For ‘F1’ If Error**

Allows you to hit F1 key when errors occur.
Choices: Enabled(default); Disabled

**Hit ‘DEL’ Message Display**

The system will show “Press DEL key to run Setup when enabled.
Choices: Enabled(default); Disabled

**Interrupt 19 Capture**

Allows option ROMs to trap interrupt 19.
Choices: Enabled; Disabled(default)

### 4-6.6.2 Boot Device Priority

Choose “Boot Device Priority” in “Boot Configuration Setup” and press <Enter>. The bootable devices installed on board will appear and are allowed to assign the Boot Priority.

**Boot Device Priority**

| Boot Device Priority | | Help Item |
|---|---|---|
| 1st Boot Device | 1st FLOPPY DRIVE | |
| 2nd Boot Device | PM-WDC WD400BB-00 | |

**1st/2nd Boot Device** Allows you to set (by pressing <Enter>) floppy or IDE devices already installed to be the 1st/2nd/3rd boot device. Choices: Disabled; Device(s) installed

### 4-6.6.3 Hard Disk Drives

Choose “Hard Disk Drives” in “Boot Configuration Setup” and press <Enter>.

**Removable Drives**

| Removable Drives | | Help Item |
|---|---|---|
| 1st Drive | PM-WDC WD400BB-00 | |
| 2nd Drive | PS-WDC WD400BB-00 | |

**1st Drive/2nd Drive** Allows you to set (by pressing <Enter>) which hard disk as 1st boot drive/2nd boot drive.

### 4-6.6.4 Removable Drives

Choose “Boot Device Priority” in “Boot Configuration Setup” and press <Enter>.

**Removable Drives**

| Removable Drives | | Help Item |
|---|---|---|
| 1st Drive | 1st FLOPPY DRIVE | |

**1st Drive** Allows you to set (by pressing <Enter>) the available drive as 1st removable drive.

### 4-6.6.5 CD/DVD Drives

Choose “Boot Device Priority” in “Boot Configuration Setup” and press <Enter>.

**Removable Drives**

| Removable Drives | | Help Item |
|---|---|---|
| 1st Drive | CD/DVD: 3S-Pioneer | |

**1st Drive** Allows you to set (by pressing <Enter>) the boot sequence from the available devices.

## 4-6.7. Boot Security Features

Boot Security Features allows you to modify the system's boot security settings.

Choose "Boot Security Features" from the Main Menu and a screen with a list of options will appear:

**CMOS Setup Utility - Copyright (C) 1985-2002, American Megatrends, Inc.**
**Boot Security Features**

| Security Settings | | Help Item |
|---|---|---|
| Supervisor Password : Not Installed | | Install or Change the password. |
| User Password : Not Installed | | |
| Change Supervisor Password | Press Enter | |
| Change User Password | Press Enter | |
| Clear User Password | Press Enter | |
| Boot Sector Virus Protection | Disabled | |

↑↓←→ : Move Enter : Select +/- : Values F10: Save Esc: Exit F1: General Help
F7 : Previous Values F8 : Fail-Safe Defaults F9: Optimized Defaults

### 4-6.7.1. Supervisor Password

To show the status of Supervisor Password. "Installed" is displayed when supervisor password is set up. Otherwise, "Not Installed" is displayed.

### 4-6.7.2. User Password

To show the status of User Password. "Installed" is displayed when supervisor password is set up. Otherwise, "Not Installed" is displayed.

### 4-6.7.3 Change Supervisor Password

This option allows you to set a new Supervisor password for the system:

1. Choose “Change Supervisor Password” in the “BIOS Security Features” and press <Enter>. Then the following message appears:

**[ Enter new supervisor password ]**

2. The first time you run this option, enter your password up to 6 characters and press <Enter>. (The screen does not display the entered characters.)
3. After you enter the password, the following message appears, prompting you to confirm the password:

**[ Confirm New Password ]**

4. Enter the same password “exactly” the same as you have just typed to confirm the password and press <Enter>.
5. The following message appears to confirm the new password setup.

| [ Password installed ] |
|---|
| [OK] |

6. Then press any key to continue your CMOS Setup. To save the password setup, you should press “Save Changes and Exit” and choose “OK” to exit and save setup.
7. If you enter a new password into the box, you will be using this new password after you have finished and saved this new setup. Instead, if you press <Enter> before you enter any new password into the instruction box, another message box appears, telling you that you have disabled the Supervisor Password. That means, no password is set for either entering BIOS Setup or system:

| [ Password uninstalled ] |
|---|
| [OK] |

**User Access Level** Allows you to set four different Access Levels when Supervisor Password has been set.
Choices: Full Access; Limited; View Only; No Access

Note: “User Access Level” and “Password Check” will appear when “Supervisor Password” has been set.

User Access Level

If Supervisor Password is set up, this item appears to allow you to set the User Access mode.
Choices: No Access; View only; Limited; Full Access

### 4-6.7.4 Change User Password

This option allows you to set a new User password for the system:

1. Choose “Change User Password” in the “BIOS Security Features” and press <Enter>. Then the following message appears:

**[ Enter New Password ]**

2. The first time you run this option, enter your password up to 6 characters and press <Enter>. (The screen does not display the entered characters.)
3. After you enter the password, the following message appears, prompting you to confirm the password:

**[ Confirm New Password ]**

4. Enter the same password “exactly” the same as you have just typed to confirm the password and press <Enter>.

5. The following message appears to confirm the new password setup.

| [ Password installed ] |
|---|
| [OK] |

6. Then press any key to continue your CMOS Setup. To save the password setup, you should press “Save Changes and Exit” and choose “OK” to exit and save setup.

Pass word Check

**Password Check** Allows you to set BIOS to check up password with a password prompt at BIOS Setup or whenever restarting system. This option will appear when you have set Supervisor Password or User Password.
Choices: Setup (default); Always

### 4-6.7.5 Boot Sector Virus Protection

**Boot Sector Virus Protection** When enabled, you receive a warning message if a program (specifically, a virus) attempts to write to the boot sector or the partition table of the hard disk drive.
You should then run an antivirus program. Keep in mind that this feature protects only the boot sector, not the entire hard drive.

> NOTE: Many disk diagnostic programs that access the boot sector table can trigger the virus warning message. If you plan to run such a program, we recommend that you disable the virus warning.

## 4-6.8 Save Changes and Exit

Save Changes and Exit allows you to save all modifications you have specified into the CMOS memory. Highlight this option on the Main Menu and press <Enter>. The following message appears:

| [ Saving configuration changes and exit setup? ] | |
|---|---|
| [OK] | [Cancel] |

Press <Enter> key to save the configuration changes and exit CMOS Setup to restart your system.

## 4-6.9 Discard Changes and Exit

Discard Changes option allows you to exit (or not exit) the Setup Utility without saving the modifications that you have specified. Highlight this option on the Main Menu and press <Enter> and the following message appears:

| Discard Changes and exit setup? | |
|---|---|
| [OK] | [Cancel] |

Follow the message and press <Enter> key to exit CMOS Setup and restart system.

## 4-6.10 Load Optimal Defaults

When you press <Enter> on this item, you will get a confirmation dialog box with a message similar to:

| [ Load Optimal Defaults ?] | |
|---|---|
| [OK] | [Cancel] |

Press <Enter> now to load Optimal values for all the Setup options.

## 4-6.11 Discard Changes

Discard Changes option allows you to cancel the modifications that you have specified in the Setup Utility. Highlight this option on the Main Menu and press <Enter> and the following message appears:

| [ Discard Changes?] | |
|---|---|
| [OK] | [Cancel] |

Follow the message and press <Enter> key to cancel the modifications that you have specified.

# Chapter 5 SATA RAID/AHCI Setup

## ICH6R RAID Controller & RAID Driver

Intel ICH6R RAID (Redundant Array of Independent Disks) Controller is built in the South BridgeICH6R. With this RAID Controller, the IntelSATA RAID BIOS is built into the system to help configure the Redundant Disk Array. ICH6R supports RAID 0 / RAID 1 configuration as well as SATA AHCI configuration. SATA AHCI supports 1 to 4 SATA all-master hard disks

### This Chapter is to introduce the SATA RAID/SATA AHCI Configurations :

**5-0 About Disk Array ..... 83**
- **5-0-1 Disk Array Interpretation ..... 83**
- **5-0-2 Disk Array Member ..... 83**
- **5-0-3 Disk Array Types Supported by ICH6R ..... 83**
- **5-0-4 SATA Hard Disks Setup for RAID System ..... 84**

**5-1 Enable SATA RAID in System BIOS ..... 85**

**5-2 To Enter Intel RAID BIOS Utility Setup ..... 86**

**5-3 To Create Disk Array ..... 87**

**5-4 To Install SATA RAID Driver on Windows 2K/XP ..... 90**

**5-5 To Install SATA AHCI Hard Disks Driver ..... 93**
- **5-5-1 To Enable AHCI Function in BIOS Setup ..... 93**
- **5-5-2 Install Windows 2K/XP with 82801 FR AHCI Controller ... 94**

# 5-0 About Disk Array

## 5-0-1 Disk Array Interpretation

A “Disk Array” is formed from a group of 2 or more disk drives with the RAID (Redundent Array of Independent Disks) technology. The aim of a Disk Array is to provide better perfornance and/or data fault tolerance.

## 5-0-2 Disk Array Member

The individual disk drive in an array is called a “member”. Each member of a specific disk array is coded in their “reserved sector” with configuration information that identifies the drive as a member. All disk members in a formed disk array are recognized as a single physical drive to the system.

## 5-0-3 Disk Array Types Supported by ICH6R

Different types or modes of Disk Array have different formation models and functions. The South Bridge on this mainboard supports RAID 0 or RAID 1 mode only

1. RAID 0 (or Striping mode):
   RAID 0 is a group of 2 to 4 Disk Drives configured together with RAID technology to provide better data transfer performance than a single drive since the workload is balanced between the array members. Reads and Writes of RAID 0 data are interleaved between multiple drives. When any disk member fails, it affects the entire array. The disk array size is equal to the number of drive members times the smallest member capacity. For example, one 1GB and three 1. 2GB drives will form a 4GB (4x1GB) disk array.
2. RAID 1 (or Mirroring mode):
   RAID 1 is a group of 2 Disk Drives configured together with RAID Technology to provide the fault tolerance function. Writes duplicate data on to RAID 1 while reads are performed in parallel. If one of the mirrored drives suffers a mechanical failure (e.g. spindle failure) or does not respond , the remaining drive will continue to function. This is called Fault Tolerance.
   The drive capacity of RAID 1 is half the total drive capacity of two equal-size drive.

## 5-0-4 SATA Hard Disks Setup for RAID System

(1) 4Serial ATA connectors for 4 SATA RAID Hard Disks setup.

(2) 4 Serial ATA connectors also supports 4 SATA AHCI all-master hard disks setup. That means, SATA AHCI mode does not require mas ter/slave differentiation.

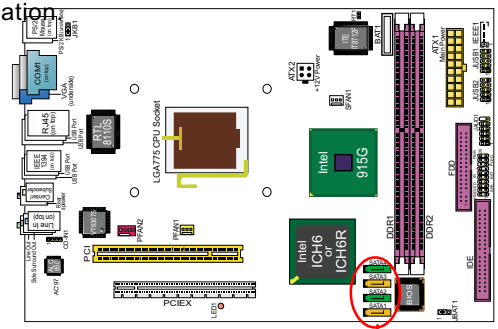


**Attention:**
**(1) Supporting SATA RAID, SATA1 plus SATA3 or SATA2 plus SATA4 are liknked together for a pair of SATA RAID hard disk setup. 4 SATA connectors can also be applied to 4 hard disk at the same time for 0 or 1 mode RAID setup.**
**(2) Supporting SATA AHCI setup, 4 SATA connectors supports 1 to 4 all-master hard disks setup.**

**Serial ATA Connectors**

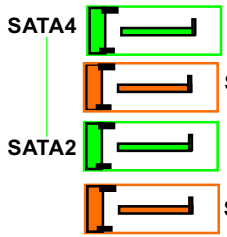


**SATA Connectors supported by ICH6R for 2 sets of SATA RAID Hard Disks setup.**

**Serial ATA Cable**

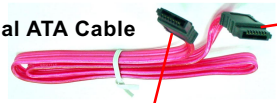

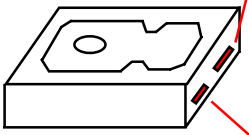

**Serial ATA Hard Disk**

**To Power Supply**

**SATA Power Connectors**

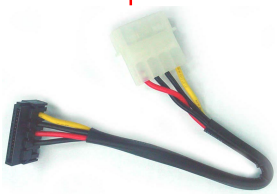

**Serial ATA Power Cable (optional)**

## 5-1 Enable SATA RAID in System BIOS

To enable SATA RAID controller, boot the system and watch for the following initial screen to appear:

```
Inrel (R) Application Acceleration RAID Option ROM vxxxxxxx
 Copyright (C) 2003-04 Intel Corporation. All right reserved.

RAID Volumes:
None defined.

Physical Disks:
Port Drive Model        Serial #      Size        Type/Status(Vol ID)
  0 ST380023AS          XXXXXXXXX     115.0GM     Non-RAID Disk
  2 Maxtor 6Y120M0      XXXXXXXXX     114.0GM     Non RAID Disk

Press <CTRL-I > to enter  Configuration Utility..

(The above message indicates that the SATA hard disks on board are detected by the
RAID BIOS.)
```

As soon as the above screen appears, press < Delete > key (not <CTRL-I> key) to enter CMOS BIOS Setup. Choose “Advanced BIOS Features” and “IDE Configuration” to configure S-ATA as RAID.

**IDE Configuration**

| IDE Configuration | | Help Item |
|---|---|---|
| ATA/IDE Configuration | Enhanced | |
| Configure SATA as | RAID | |
| ▶ Primary IDE Master | Hard Disk | |
| ▶ Primary IDE Slave | Hard Disk | |
| ▶ Secondary IDE Master | CD-ROM | |
| ▶ Secondary IDE Slave | Not Detected | |
| ▶ Third IDE Master | Not Detected | |
| ▶ Third IDE Slave | Not Detected | |
| Hard Disk Write Protect | Disabled | |
| IDE Detect Time Out (Sec) | 35 | |
| ATA(PI) 80Pin Cable Detection | Host & Device | |
| S-ATA Detection Delay | Enabled | |

**Configure SATA As:**

This item allows you to configure SATA mode
Choices: IDE;
RAID (for ICH6R only): Supporting RAID0 or 1 mode
AHCI: If AHCI is chosen, it allows you to enable the Stagger Spinup Support and take all hard disks on board as master.

## 5-2 To Enter Intel RAID BIOS Utility Setup

Boot the system with "SATA-RAID " enabled in system BIOS Setup and watch for the following initial screen to appear:

```
Inrel (R) Application Acceleration RAID Option ROM vxxxxxxx
 Copyright (C) 2003-04 Intel Corporation. All right reserved.

RAID Volumes:
None defined.

Physical Disks:
Port Drive Model          Serial #        Size          Type/Status(Vol ID)
  0 ST380023AS            XXXXXXXXX       115.0GM       Non-RAID Disk
  2 Maxtor 6Y120M0        XXXXXXXXX       114.0GM       Non RAID Disk

Press <CTRL-I > to enter  Configuration Utility..

(The above message indicates that the SATA hard disks on board are detected by the
RAID BIOS.)
```

As soon as the above screen appears, press < CTRL-I > key to enter Intel RAID Configuration Utility.
In a few seconds, the Intel RAID Setup Utility appears as shown below:

```
Inrel (R) Application Acceleration RAID Option ROM vxxxxxxx
Copyright (C) 2003-04 Intel Corporation. All right reserved.

                    [ MAIN MENU ]

                    1.  Create RAID Volume
                    2.  Delete RAID Volume
                    3.  Reset Disks to Non-RAID
                    4.  Exit

                 [ Disk/Volume Information ]

RAID Volumes:
None Defined.

Phical Disks:
Port Drive Model          Serial #        Size        Type/Status
  0 ST380023AS            XXXXXXXXX       115.0GM     Non-RAID Disk
  2 Maxtor 6Y120M0        XXXXXXXXX       114.0GM     Non-RAID Disk

[ ↑ ↓ ]-Select        [ESC] - Exit        [Enter] - Select Menu
```

## 5-3 To Create Disk Array

(5-3-1) When you press <Enter> on the "1. Create RAID Volume" bar, the following screen shows up. Enter a name for the volume to be created.

**[ Create Array MENU ]**

Name: RAID Volume 1
RAID Level: RAID1(Mirror)
Strip Size: 128KB
Capacity: 228.9GB
Create Volume

**[ Help ]**

**Enter a string between 1 and 16 characters in length that can be used to uniquely identify the RAID volume. This name is case sensitive and cannot contain special characters.**

[ ↑ ↓ ]-Change [Tab] - Next [ESC] - Previous Menu [Enter] - Select Menu

(5-3-2) Next, press <Tab> key to jump to RAID Level bar and press Arrow key to select the RAID mode.

**[ Create Array MENU ]**

Name: RAID Volume 1
RAID Level: RAID1(Mirror)
Strip Size: 128KB
Capacity: 228.9GB
Create Volume

**[ Help ]**

**Choose the RAID level best suited to your usage model.**

**RAID0(Stripe) - Create a volume where equal portions of the volume are spread accross all the disks. This creates a volume with higher performance by accessing all disks at once.**

**RAID1(Mirror)) - Create a volume where a redundant copy of the data is stored on each disk. This creates a volume protected from a single hard disk failure.**

[ ↑ ↓ ]-Change [Tab] - Next [ESC] - Previous Menu [Enter] - Select Menu

(5-3-3) After selecting the RAID mode, press <Enter> to confirm your choice. Then press <Enter> again on the Create Volume bar to proceed.

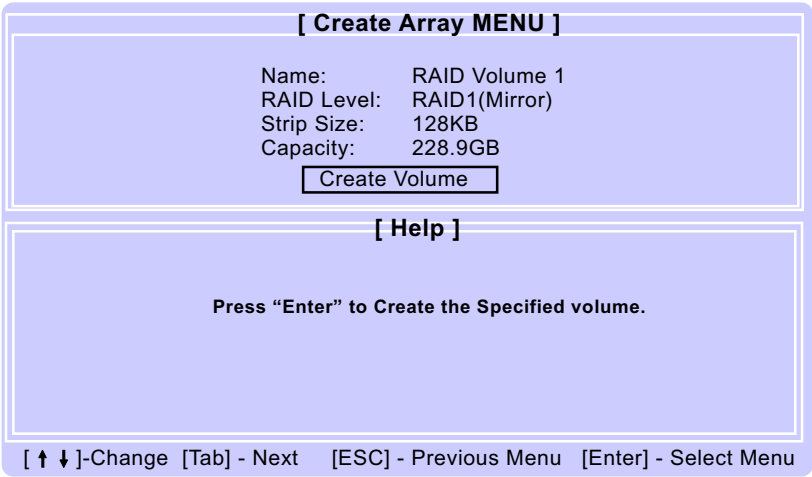


(5-3-4) Press <Y> on the following screen to proceed.

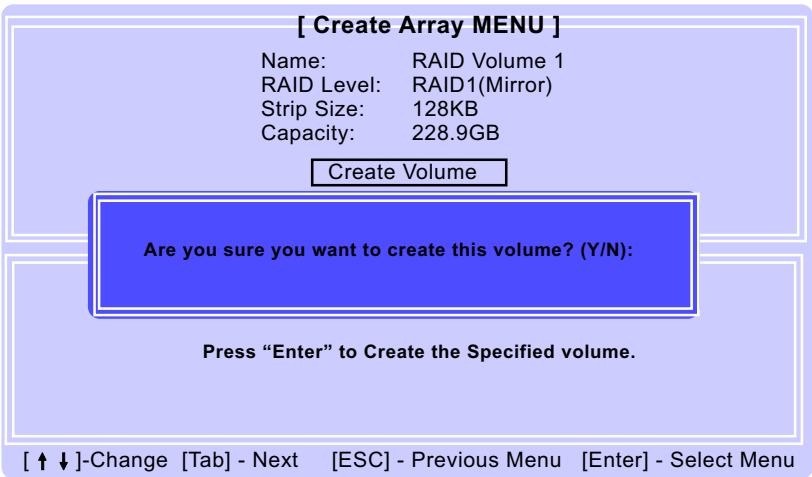

(5-3-5) Instantly, the RAID 1 mode is set up and shown on the screen. Then press <Esc> key to exit the screen.

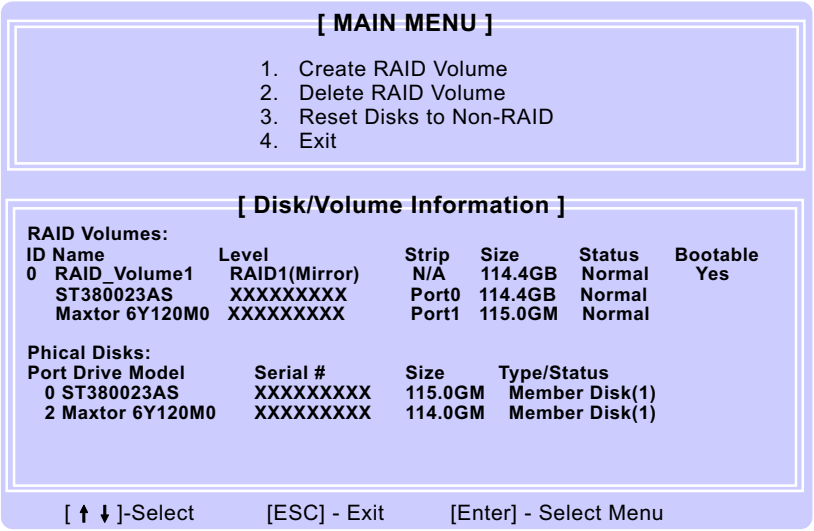


(5-3-6) On the next screen, enter Y to confirm exit.

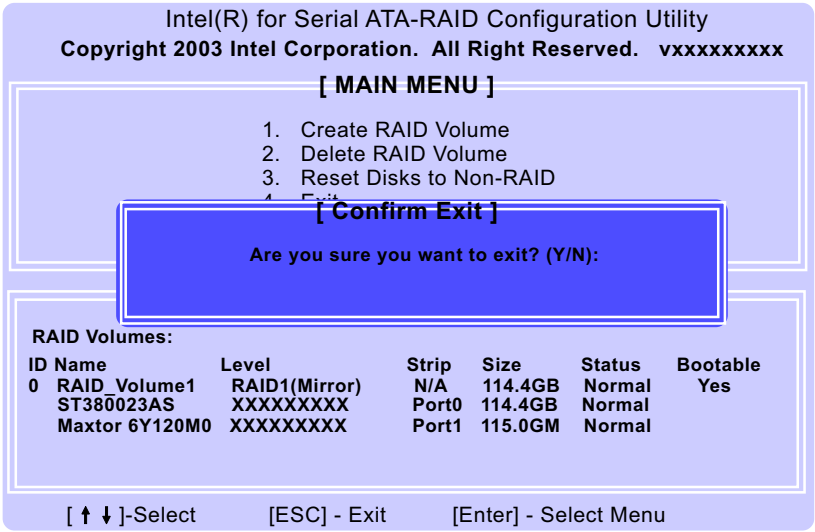

## 5-4 To Install SATA RAID Driver on Windows 2K/XP

SATA-RAID Driver is incorporated in Support CD/Floppy Diskette for user's installation. This driver is intended forWinXP/2K only.
Since Intel has not yet provided RAID driver for Win98, ICHR RAID system run with Win98 is not recommended

(1) Get ready the Floppy Diskette holding the RAID Driver.
(This Driver Diskette should have been enclosed in the mainboard Package. If you cannot find one, you must make one with the RAID Driver CD before system installation.)
(2) Check that SATA Hard Disks are connected properly to the SATA Connectors.
(3) Start your PC system and use RAID BIOS Setup Utility to configure RAID 0 or RAID 1 to the hard disks. (For SATA Interface, skip the RAID configuration.)
(4) Restart System and format the bootable hard disks.
(5) Now, apply the Windows 2000/XP CD to CD-ROM for operating system installation.
(6) On the Windows 2000 Setup screen, press "F6" key to set up RAID driver for Windows 2000/XP.

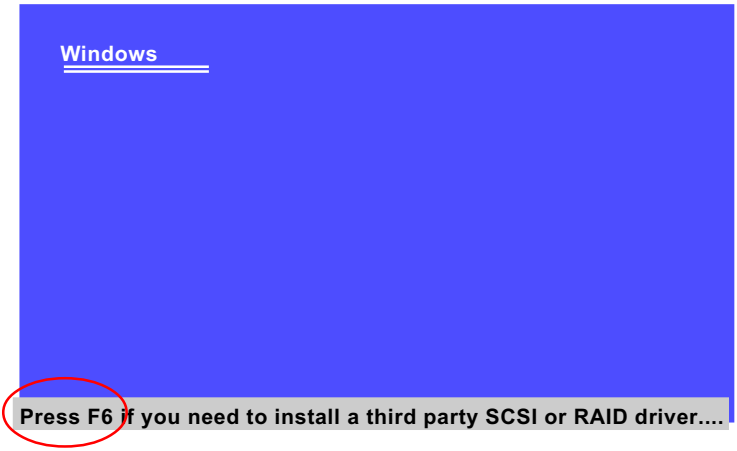

(7) On next screen press “S” to confirm the mass storage device setup.

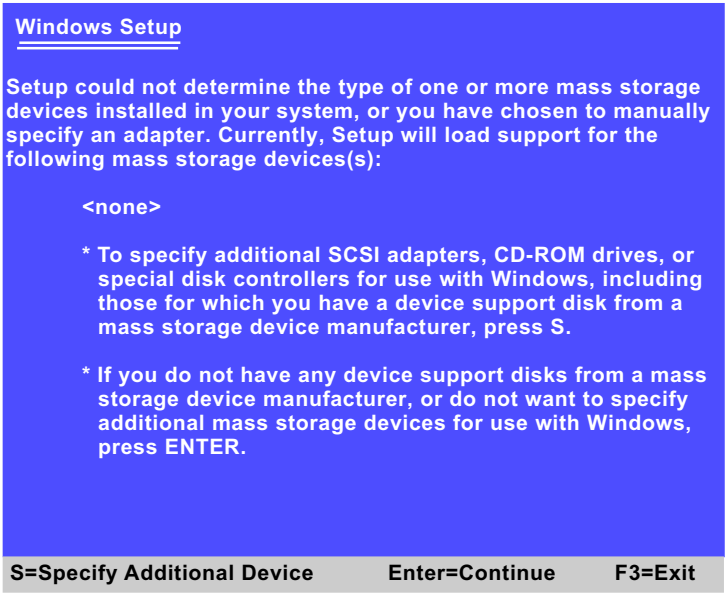


(8) On next screen apearing, insert the RAID Driver Diskette to Drive “A” and then press <Enter>.

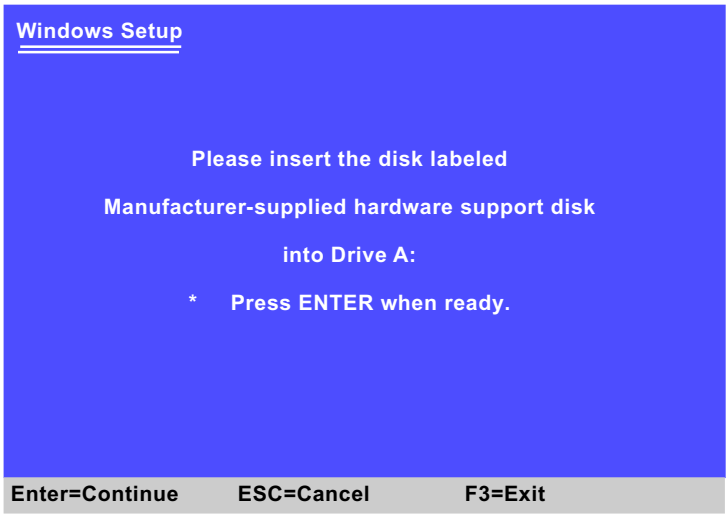

(9) On the next screen, you are prompted to install the “Intel(R) 82801FR Controller” driver.
So, select 82801 SATA RAID Controller and press<Enter> on to continue.

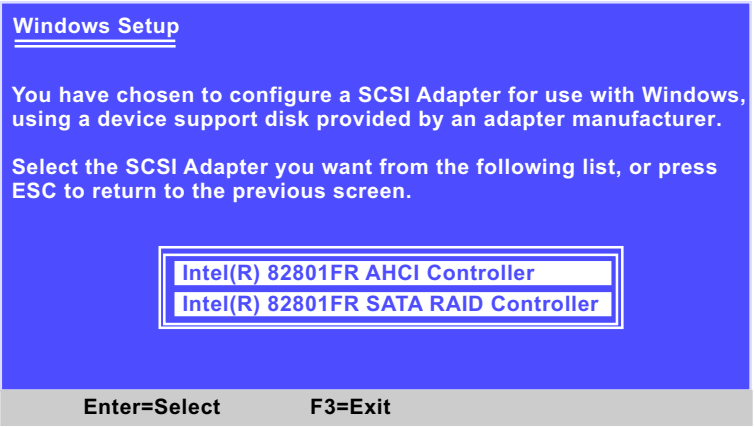


(10) Next screen will show that you have chosen the RAID device driver to set up. Press Enter to continue, and the Installation Program will then guide you through the rest of system setup.

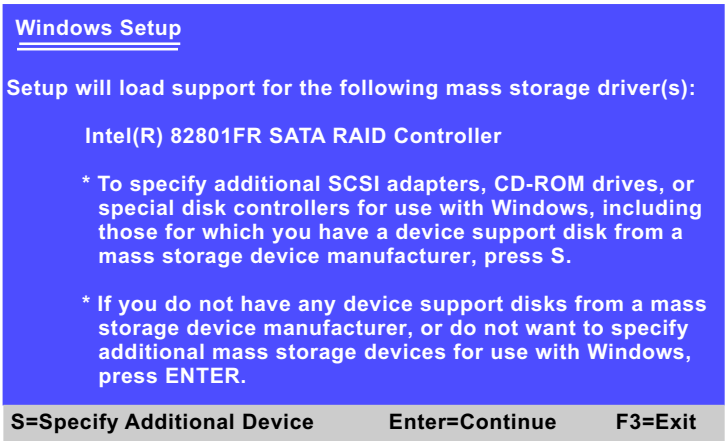


(11) When the system is completely installed, the RAID driver will also be installed into the system.

Attention: ICH6R RAID Controller does not support Windows Me/9X.

## 5-5 To Install SATA AHCI Hard Disks Driver

SATA-AHCI hard Disks system requires AHCI driver support. User should install the AHCI driver as illustrated below.

### 5-5-1 To Enable AHCI Function in BIOS Setup

Enter CMOS BIOS Setup and choose “Advanced BIOS Features” and “IDE Configuration” to configure S-ATA as AHCI.

**IDE Configuration**

| IDE Configuration | | Help Item |
|---|---|---|
| ATA/IDE Configuration | Enhanced | |
| Configure SATA as | AHCI | |
| ▶ Primary IDE Master | Hard Disk | |
| ▶ Primary IDE Slave | Hard Disk | |
| ▶ Secondary IDE Master | CD-ROM | |
| ▶ Secondary IDE Slave | Not Detected | |
| ▶ Third IDE Master | Not Detected | |
| ▶ Third IDE Slave | Not Detected | |
| Hard Disk Write Protect | Disabled | |
| IDE Detect Time Out (Sec) | 35 | |
| ATA(PI) 80Pin Cable Detection | Host & Device | |
| S-ATA Detection Delay | Enabled | |

**Configure SATA As:**

This item allows you to configure SATA mode
Choices: IDE;
RAID (for ICH6R only): Supporting RAID0 or 1 mode
AHCI: If AHCI is chosen, it allows you to enable the Stagger Spinup Support and take all hard disks on board as master.

## 5-5-2 Install Windows 2K/XP with 82801 FR AHCI Controller

(1) Get ready the Floppy Diskette holding the RAID Driver which includes the AHCI controller driver as well.
(This Driver Diskette should have been enclosed in the mainboard Package. If you cannot find one, you must make one with the RAID Driver CD before system installation.)

(2) Check that SATA Hard Disks are connected properly to the SATA Connectors.

(3) Now, apply the Windows 2000/XP CD to CD-ROM for operating system installation.

(4) On the Windows 2000 Setup screen, press “F6” key to set up RAID driver for Windows 2000/XP.

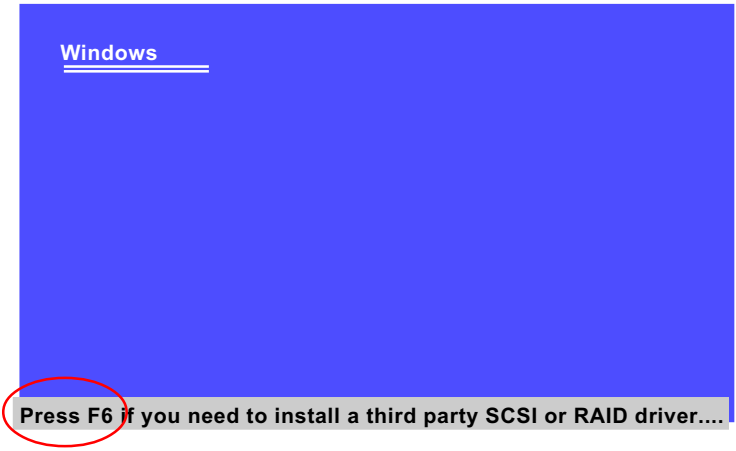

(5) On next screen press “S” to confirm the mass storage device setup.

**Windows Setup**

**Setup could not determine the type of one or more mass storage devices installed in your system, or you have chosen to manually specify an adapter. Currently, Setup will load support for the following mass storage devices(s):**

**<none>**

*** To specify additional SCSI adapters, CD-ROM drives, or special disk controllers for use with Windows, including those for which you have a device support disk from a mass storage device manufacturer, press S.**

*** If you do not have any device support disks from a mass storage device manufacturer, or do not want to specify additional mass storage devices for use with Windows, press ENTER.**

**S=Specify Additional Device Enter=Continue F3=Exit**

(6) On next screen apearing, insert the RAID Driver Diskette to Drive “A” and then press <Enter>.

**Windows Setup**

**Please insert the disk labeled**

**Manufacturer-supplied hardware support disk**

**into Drive A:**

*** Press ENTER when ready.**

**Enter=Continue ESC=Cancel F3=Exit**

(7) On the next screen, you are prompted to install the "Intel(R) 82801FR AHCI Controller" driver.
So, select 82801 AHCI Controller and press <Enter> on to continue.

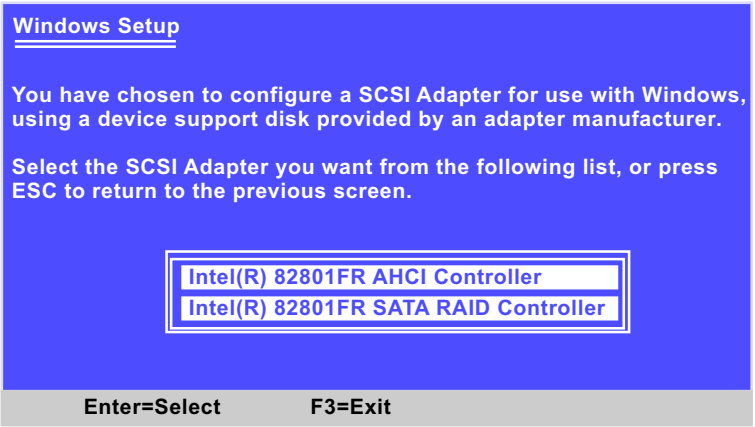


(8) Next screen will show that you have chosen the AHCI device driver to set up. Press Enter to continue, and the Installation Program will then guide you through the rest of system setup.

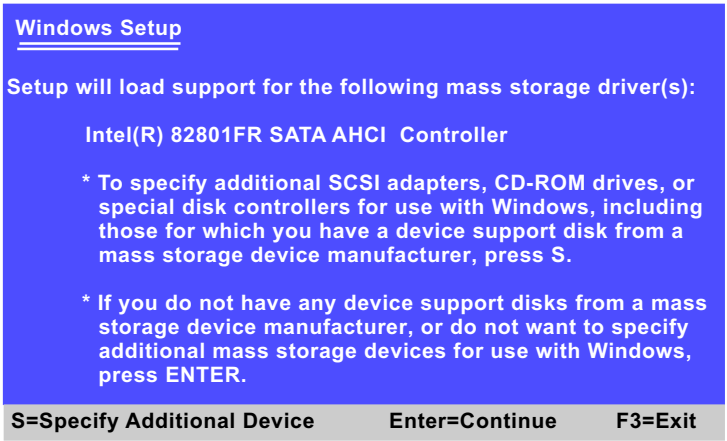


(11) When the system is completely installed, the AHCI driver will also be installed into the system.

Attention: ICH6R AHCI Controller does not support Windows Me/9X.