TYAN® S5512 Quick Reference

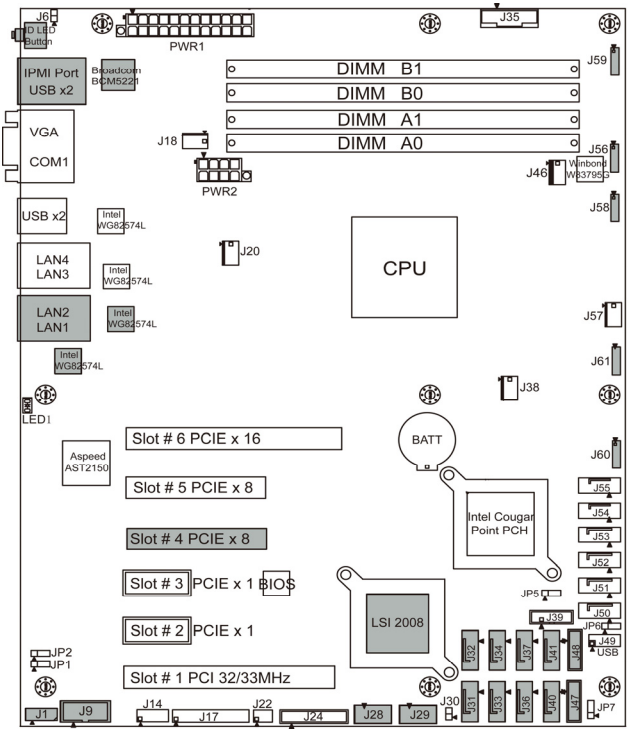

Power Supply

TYAN® S5512 supports power connectors below:

Power1

12x2 pin power connector

Power2

4x2 pin power connector

JP6: Clear CMOS

Pin 1-2 closed:
Normal (Default)

Pin 2-3 closed:
Clear CMOS

NOTE:

1. **▲ in the image indicates pin 1**
2. **The grey area represents varying parts in the 4 SKUs which will be removed or remained.**
3. **Specific changes please see the table below.**

Model	Chip	LAN	IPMI	USB Type-A	8 pin Fan connector	PCIE Slot	SAS	SATA
S5512GM2NR	C204	2	Yes	2	5	5	0	6
S5512WGM2NR	C204	2	Yes	2	5	4	8	6
S5512G2NR-LE	C202	2	No	0	0	4	0	6
S5512GM4NR	C204	4	Yes	2	5	5	0	6

J18/J20/J38/J46/J57: **4 Pin Fan Header**
J56/J58/J59/J60/J61: **8 Pin System FAN Header**
J1: **IPMB Connector**
J6: **FP ID LED 2 Pin Header**
J9: **COM2 Header**
J14/J49: **Dual USB2.0 Header**
J17: **Front Panel Header**
J22: **LAN ACTIVE LED Header**
J28/J29: **USB2.0 Type-A Connector**
J30: **Intrusion Switch 2 Pin Header**
J35: **PSMI Connector**
J39/J47/J48: **SGPIO Header**
JP5: **ME recovery function Set**
JP6: **RTC Clear CMOS Set**
JP7: **ME update function Set**

J17: Front Panel Connector

Signal	Pin	Pin	Signal
PWR_LED+	1	2	FP_PWR(3.3V)
KEY	3	4	ID_LED+
PWRLED-(GND)	5	6	ID_LED- (GND)
HDD-LED+	7	8	FAULT_LED1-
HDD-LED-	9	10	FAULT_LED2-
Power Switch+	11	12	LAN1_ACTLED+
GND	13	14	LAN1_ACTLED-
Reset Switch+	15	16	SMB_DATA
GND	17	18	SMB_CLK
ID Switch+	19	20	INTRUSION#
TEMP_SENSE	21	22	LAN2_ACTLED+
NMI Switch#	23	24	LAN2_ACTLED-