Operating Guide

EPIA EN-Series Mini-ITX Mainboard

January 18, 2012

Version 1.21

Table of Contents

Table of Contents i

VIA EPIA EN-Series Overview 1

VIA EPIA EN-Series Layout 2

VIA EPIA EN-Series Specifications 3

VIA EPIA EN Processor SKUs 4

VIA CN700 Chipset Overview 5

VIA EPIA EN-Series I/O Back Panel Layout 6

VIA EPIA EN-Series Layout Diagram & Mounting Holes 7

VIA EPIA EN-Series Layout Diagram & Height Distribution 8

Power Consumption 9

- VIA EPIA EN12000E 9
- VIA EPIA EN15000 10

Power Specifications 12

VIA EPIA EN-Series Microsoft and Linux Driver Support 13

- MICROSOFT DRIVER SUPPORT 13
- LINUX DRIVER SUPPORT 13

Contact 14

VIA EPIA EN-Series Overview

The VIA EPIA EN-Series Mini-ITX Mainboard is an ultra compact native x86 platform optimized for today's demanding embedded and productivity applications. The mainboard is based on the VIA CN700 chipset featuring an embedded hardware MPEG-2 accelerator and integrated VIA UniChrome™ Pro 2D/3D graphics for rich digital media performance. With the sizable memory bandwidth of DDR2 533MHz SDRAM DIMM and the high data transfer speeds of ATA-133 and further enhanced by support of 8-Channel AC'97 codec for Smart 5.1 surround sound and SPDIF, the VIA EPIA EN-Series delivers the increased performance levels required by today's embedded digital media applications.

The latest in high-bandwidth connectivity is supported with four USB 2.0 ports, as well as a COM port and has one 10/100/1000 Fast Ethernet port for extended broadband connectivity. The VIA EPIA EN-Series also has one PCI slot for expandability options. The VIA EPIA EN-Series is compatible with a full range of Mini-ITX chassis as well as FlexATX and MicroATX enclosures and power supplies.

The VIA EPIA EN-Series is fully compatible with Microsoft® and Linux operating systems and is available in a variety of configurations, including the fanless VIA Eden™ V4 Bus NanoBGA2 processor for silent system designs and the latest VIA C7™ V4 Bus NanoBGA2 processor for small, low power and secure x86 processor platforms.

VIA EPIA EN-Series Layout

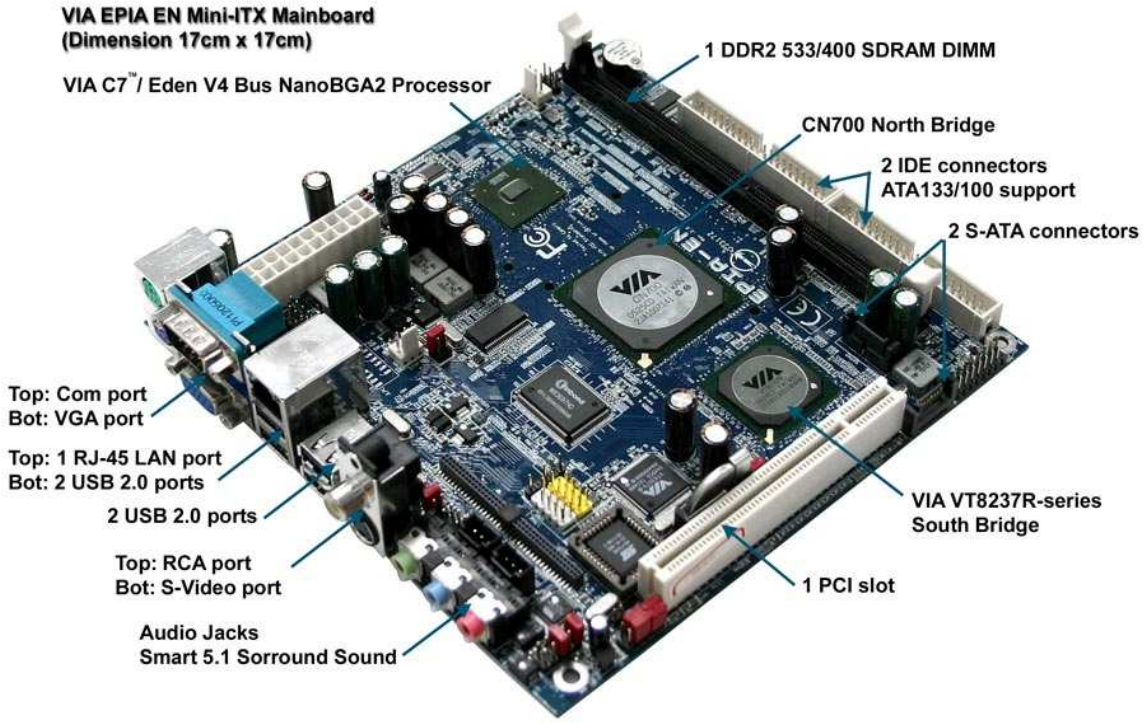

VIA EPIA EN-Series Specifications

Model Name	EPIA EN15000	EPIA EN12000E
Processor	VIA C7 1.5GHz NanoBGA2	VIA Eden 1.2GHz NanoBGA2
Chipset	- VIA CN700 North Bridge - VIA VT8237R-Series South Bridge	
System Memory	- 1 DDR2 400/533 DIMM slot - Up to 1GB memory size	
VGA	- Integrated VIA UniChrome™ Pro AGP graphics with MPEG-2 acceleration	
Expansion Slots	- 1 PCI	
Onboard IDE	- 2 UltraDMA 133/100/66 Connectors	
Onboard LAN	- VIA VT6122 Gigabit Ethernet Controller	
Onboard Audio	- VIA VT1618 8-channel AC'97 Codec	
Onboard TV Out	- VIA VT1625 HDTV Encoder	
Onboard 1394	- VIA VT6307S IEEE 1394 Firewire	
Onboard I/O Connectors	- 1 USB pin header for 2 additional USB 2.0 ports - 1 1394 pin header for a 1394 port - 1 SIR pin header (IRDA 1.0) - 2 S-ATA Connectors - 1 LPC pin header - 1 Front-panel audio pin header (Mic-in and Line-out) - 1 Serial port pin header for a second com port - 1 CIR pin header (Switchable for KB/MS) - 2 Fan connectors: CPU/Sys FAN - 2 S/PDIF connectors: (S/PDIF-in and S/PDIF-out) - 1 Component (YPbPr) video pin header - 1 SM Bus pin header - 1 LVDS/TTL/DVI module connector (an add-on card is required) - 1 Front-Panel pin header - 1 ATX Power Connector	
Back Panel I/O	- 1 PS2 Mouse port - 1 PS2 Keyboard port - 1 RJ-45 LAN port - 1 Serial port - 4 USB 2.0 ports - 1 VGA port - 1 RCA port (S/PDIF or TV out) - 1 S-Video port - 3 Audio jacks: line-out, line-in and mic-in (Horizontal, Smart 5.1 Support)	
BIOS	Award BIOS, LPC 4/8Mbit flash memory	
Operating System	Windows 2000 / XP, Linux, Win CE, XPe	
Software Application	- VIA FliteDeck™ Suite MissionControl-H/W Monitoring, Remote SNMP Management FlashPort-Live BIOS Flash SysProbe-Live DMI Browser	
System Monitoring & Management	- CPU temperature reading, CPU voltage monitoring - Wake-on-LAN, Keyboard-Power-on, Timer-Power-on, Watch Dog Timer, FAN control - System power management, AC power failure recovery	
Operating Temperature	0 ~ 50°C	
Operating Humidity	0% ~ 95% (relative humidity; non-condensing)	
Form Factor	- Mini-ITX (6-layer) - 17 cm x 17 cm	

* The specification is subject to change without prior notice.

VIA EPIA EN Processor SKUs

The VIA EPIA EN-Series is available in 1.2GHz and 1.5GHz speed grades. The VIA EPIA EN12000E and the VIA EPIA EN15000 utilize the most efficient VIA C7™ / Eden V4 Bus NanoBGA2 processor.

EPIA EN12000E / EPIA EN15000

VIA Eden / C7™ V4 Bus NanoBGA2 processor
1.2 GHz / 1.5 GHz
1.004v Operating Volts (1.2GHz)
128KB L1 Cache
128KB L2 Cache
MMX and SSE, SSE2 and SSE3
Padlock and ACE Encryption

Suitable for small, low power, ultra efficient and secure x86 platform.

PadLock ACE US government approved Advanced Encryption Standard (AES), performing cryptographic functions for securing e-mails, personal files, online transactions, and networks.

The VIA FliteDeck™ Suite, an advanced system management suite that enables to user to effortlessly track and monitors mission critical system data and enable seamless live Windows®-based BIOS updates as well as comprehensive BIOS status information.

VIA CN700 Chipset Overview

The VIA CN700 Chipset is designed to enable high quality digital video streaming and DVD playback in a new generation of fanless, small form factor PCs and IA devices. The CN700 features the embedded VIA UniChrome™ Pro 2D/3D MPEG-2 acceleration, DDR2 533MHz support, motion compensation and duo-view support to ensure a rich overall entertainment experience. Outstanding connectivity features include USB 2.0, 10/100 LAN and ATA/133.

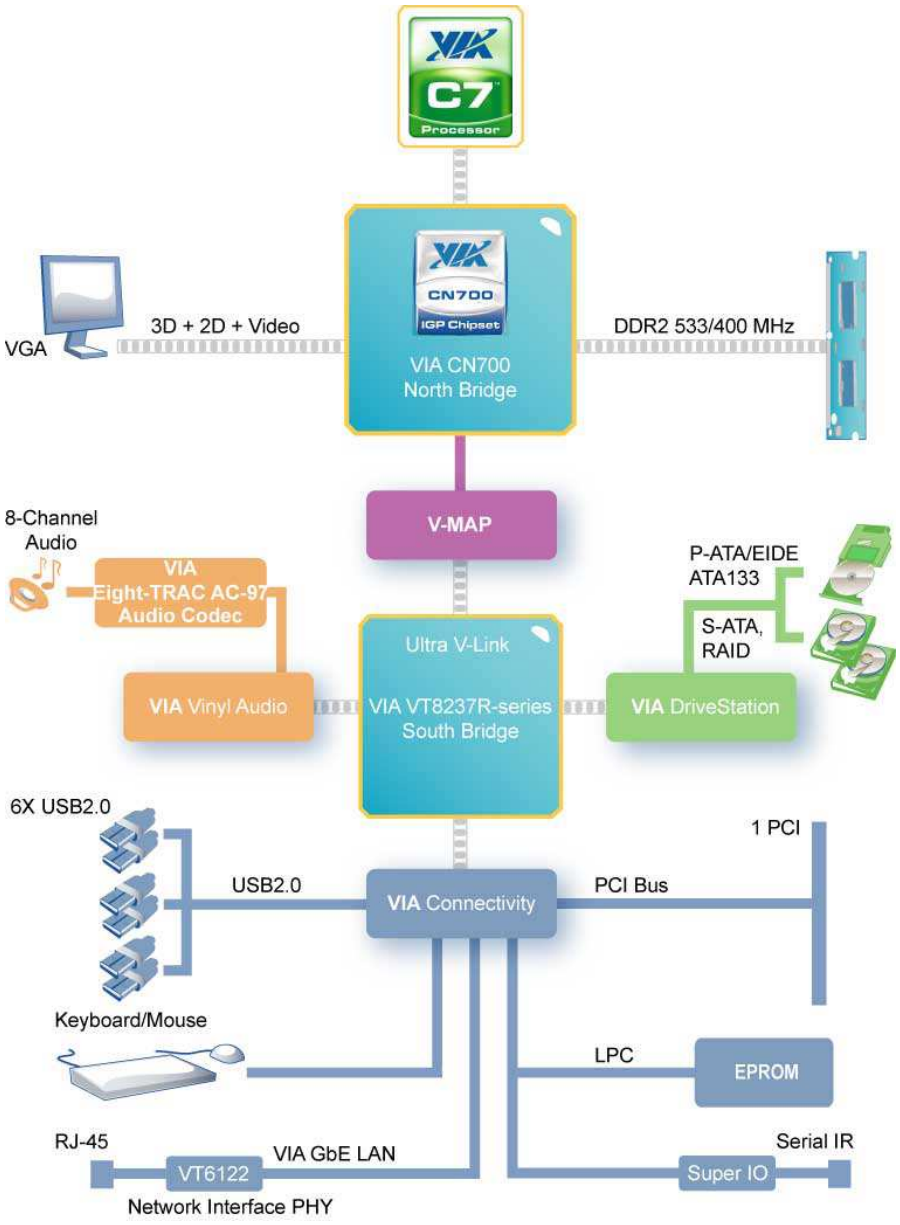

VIA EPIA EN-Series I/O Back Panel Layout

The EPIA EN's ultra compact 17cm x 17cm, integrated design supports all the standard legacy x86 connectivity options as well as PS2 Mouse port, PS2 Keyboard port, VGA port, COM port, RJ45 LAN port, USB 2.0 ports, RCA port, S-Video port and AC'97 audio jacks.

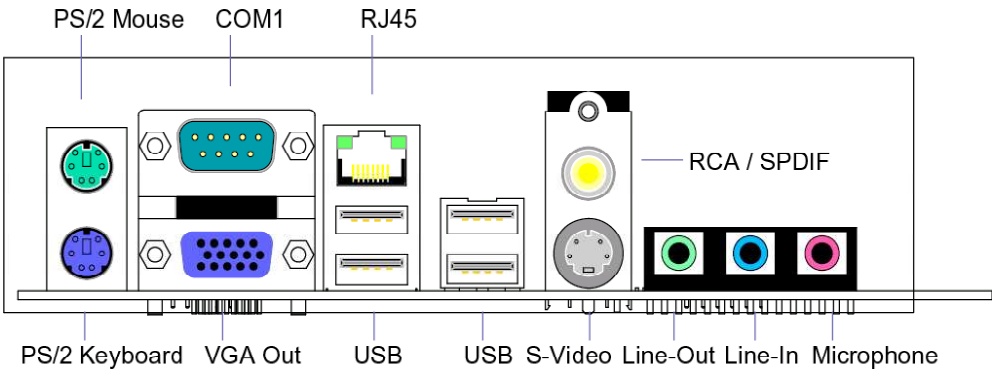

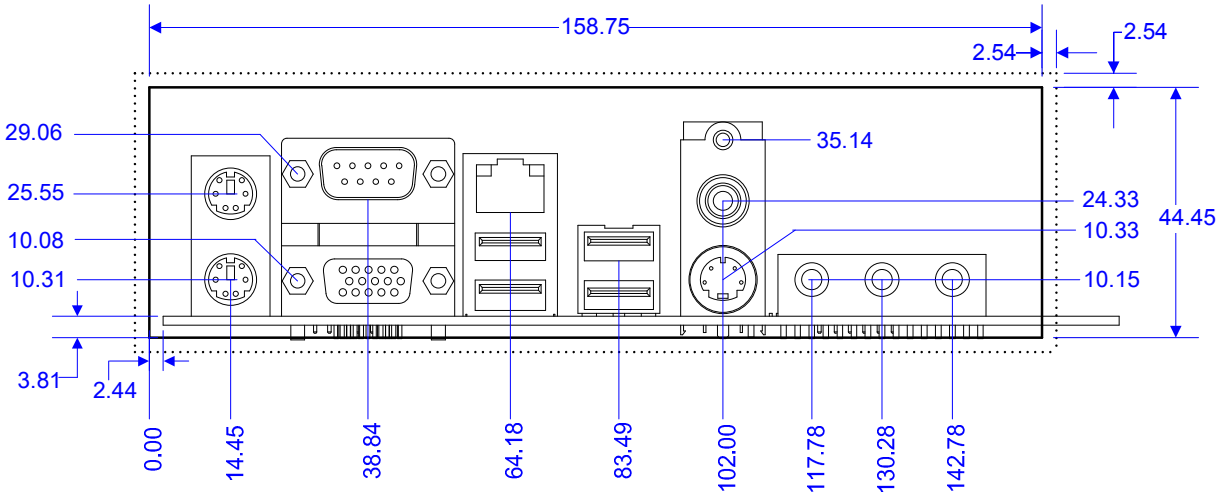

VIA EPIA EN-Series Layout Diagram & Mounting Holes

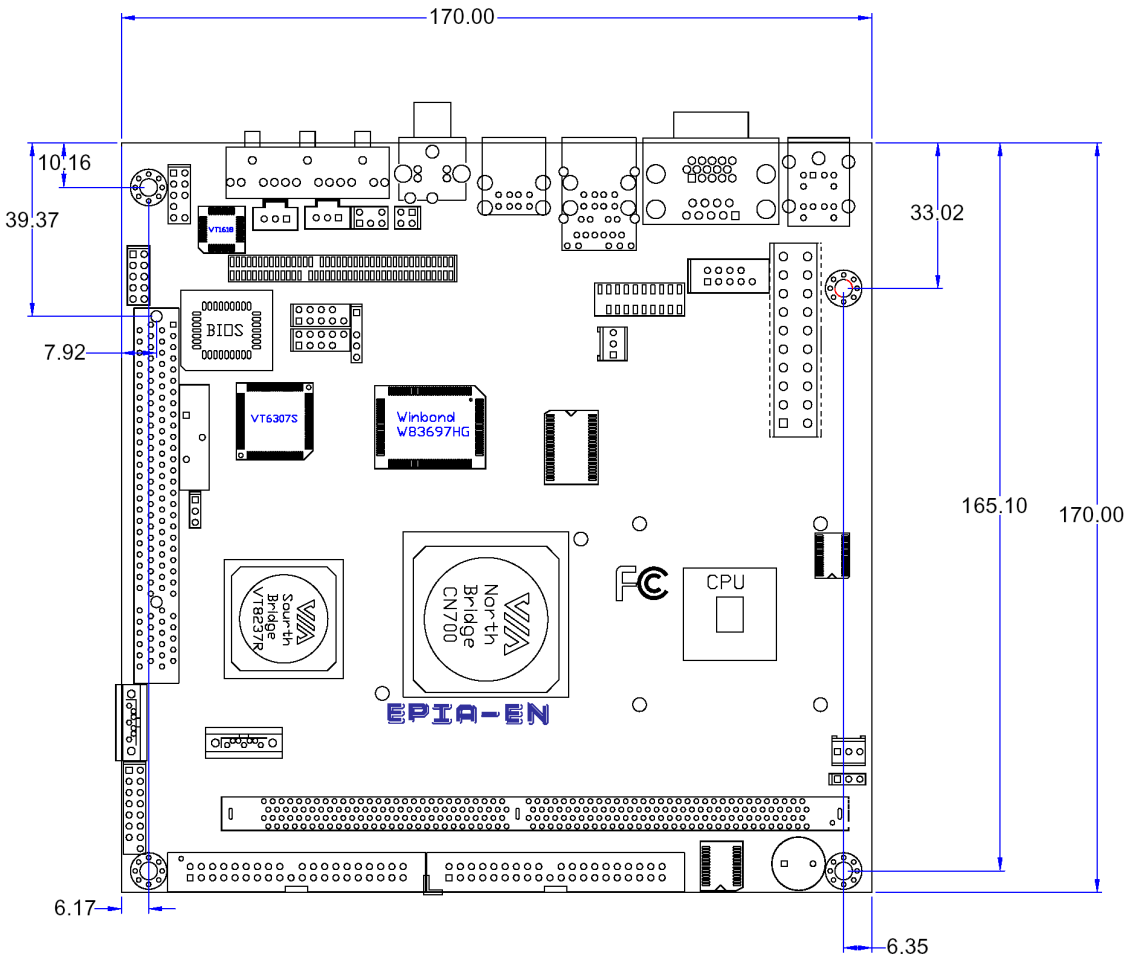

VIA EPIA EN-Series Layout Diagram & Height Distribution

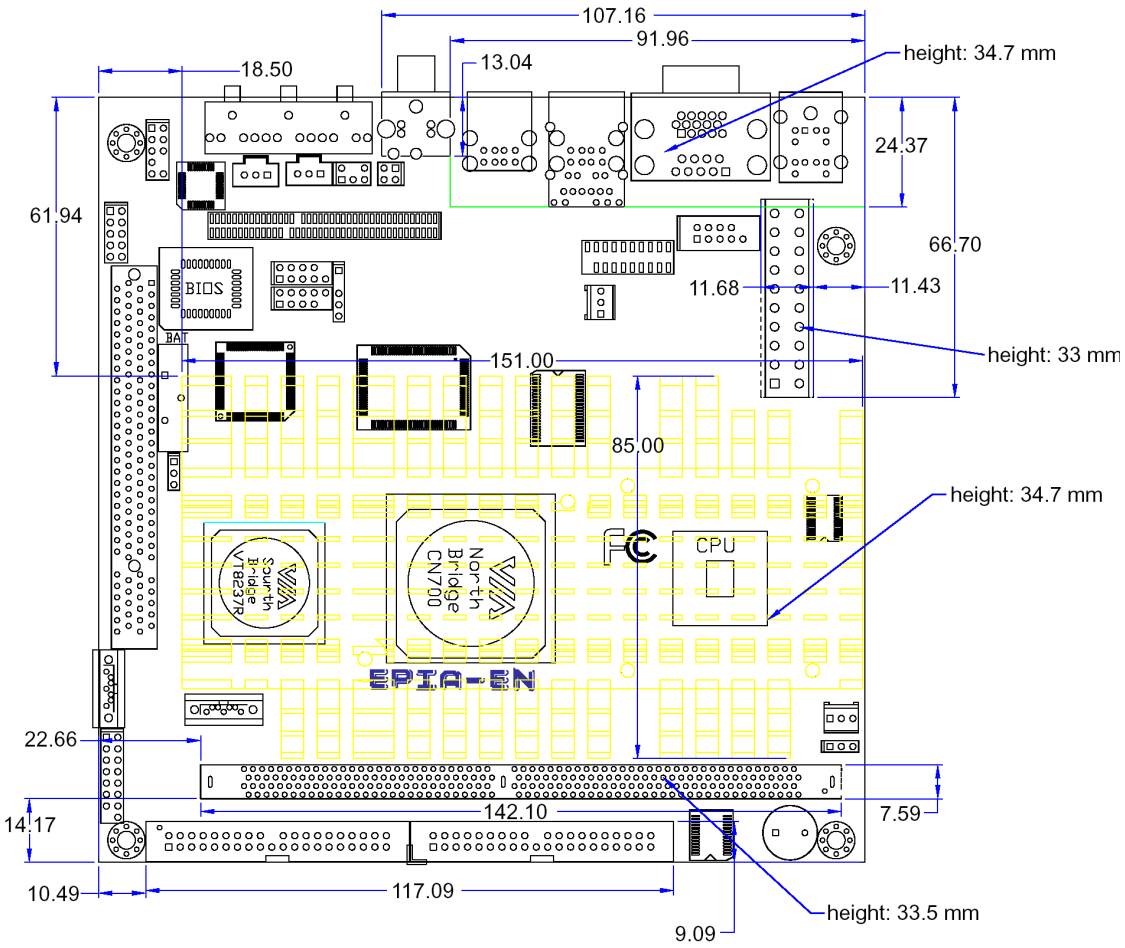

Else height under 21mm

Power Consumption

Power consumption tests were carried out comparing the VIA EPIA EN12000E (running with the 1.2GHz VIA Eden V4 Bus NanoBGA2 processor) and the VIA EPIA EN15000 (running with the 1.5GHz VIA C7™ V4 Bus NanoBGA2 processor). The following tables are a comprehensive breakdown of the EPIA platform's voltage, amp and wattage values while running common system applications.

VIA EPIA EN12000E

A. Playing DVD – Power DVD 4.0

	Measured Voltage	Measured Amp.	Watts
Main Board +3.3V	3.385	1.058	3.581
Main Board +5V	5.072	1.544	7.831
Main Board 5VSB	5.066	0.182	0.922
Main Board +12V	12.214	0.164	2.003
Main Board Power Consumption			14.338

B. Playing MP3 – Media Player

	Measured Voltage	Measured Amp.	Watts
Main Board +3.3V	3.380	1.060	3.583
Main Board +5V	5.070	1.538	7.798
Main Board 5VSB	5.062	0.183	0.926
Main Board +12V	12.200	0.165	2.013
Main Board Power Consumption			14.320

C. Running Network Application – Files Copy

	Measured Voltage	Measured Amp.	Watts
Main Board +3.3V	3.383	1.031	3.488
Main Board +5V	5.079	1.237	6.283
Main Board 5VSB	5.065	0.167	0.846
Main Board +12V	12.190	0.165	2.011
Main Board Power Consumption			12.628

D. Idle

	Measured Voltage	Measured Amp.	Watts
Main Board +3.3V	3.384	1.036	3.506
Main Board +5V	5.081	1.177	5.980
Main Board 5VSB	5.065	0.174	0.881
Main Board +12V	12.186	0.166	2.023
Main Board Power Consumption			12.390

E. Run C.C. Winstone 2001

	Measured Voltage	Measured Amp.	Watts
Main Board +3.3V	3.381	1.027	3.472
Main Board +5V	5.071	1.515	7.683
Main Board 5VSB	5.062	0.173	0.876
Main Board +12V	12.198	0.165	2.013
Main Board Power Consumption			14.043

F. S3 Mode

	Measured Voltage	Measured Amp.	Watts
Main Board +3.3V	0.000	0.000	0.000
Main Board +5V	0.000	0.000	0.000
Main Board 5VSB	5.085	0.297	1.510
Main Board +12V	0.000	0.000	0.000
Main Board Power Consumption			1.510

VIA EPIA EN15000

A. Playing DVD – Power DVD 4.0

	Measured Voltage	Measured Amp.	Watts
Main Board +3.3V	3.377	1.061	3.583
Main Board +5V	5.059	1.930	9.764
Main Board 5VSB	5.057	0.198	1.001
Main Board +12V	12.217	0.201	2.456
Main Board Power Consumption			16.804

B. Playing MP3 – Media Player

	Measured Voltage	Measured Amp.	Watts
Main Board +3.3V	3.377	1.062	3.586
Main Board +5V	5.053	2.220	11.218
Main Board 5VSB	5.058	0.207	1.047
Main Board +12V	12.239	0.202	2.472
Main Board Power Consumption			18.323

C. Running Network Application – Files Copy

	Measured Voltage	Measured Amp.	Watts
Main Board +3.3V	3.382	1.022	3.456
Main Board +5V	5.067	1.518	7.692
Main Board 5VSB	5.063	0.183	0.927
Main Board +12V	12.222	0.202	2.469
Main Board Power Consumption			14.543

D. Idle

	Measured Voltage	Measured Amp.	Watts
Main Board +3.3V	3.385	1.037	3.510
Main Board +5V	5.074	1.278	6.485
Main Board 5VSB	5.066	0.188	0.952
Main Board +12V	12.216	0.204	2.492
Main Board Power Consumption			13.439

E. Run C.C. Winstone 2001

	Measured Voltage	Measured Amp.	Watts
Main Board +3.3V	3.380	1.022	3.454
Main Board +5V	5.062	1.717	8.691
Main Board 5VSB	5.061	0.196	0.992
Main Board +12V	12.225	0.201	2.457
Main Board Power Consumption			15.595

F. S3 Mode

	Measured Voltage	Measured Amp.	Watts
Main Board +3.3V	0.000	0.000	0.000
Main Board +5V	0.000	0.000	0.000
Main Board 5VSB	5.083	0.323	1.642
Main Board +12V	0.000	0.000	0.000
Main Board Power Consumption			1.642

Power Specifications

The EPIA EN utilizes an industry standard 20-pin ATX main connector to the power supply. Due to the EPIA EN platform's ultra low power requirements a 90 – 120 Watt ATX power supply is ample for even the heaviest of multimedia system applications.

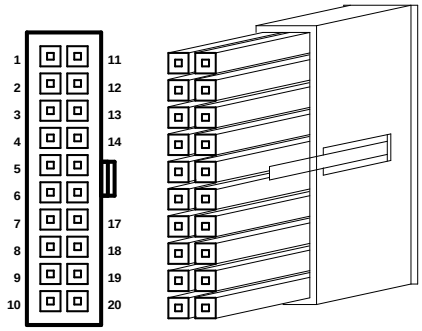

1	+3V	**11**	+3V
2	+3V	**12**	-12V
3	Gnd	**13**	Gnd
4	+5V	**14**	PWR_ON-
5	Gnd	**15**	Gnd
6	+5V	**16**	Gnd
7	Gnd	**17**	Gnd
8	PWR_GD	**18**	NC
9	5V_SB	**19**	+5V
10	+12V	**20**	+5V

Note: NC = no connection

VIA EPIA EN-Series Microsoft and Linux Driver Support

Microsoft Driver Support

VIA EPIA EN series offers full support for the complete range of Microsoft operating systems.

For standard operating systems, Windows 98/Me/2000/XP latest drivers downloads can be found in the VEPD website at www.viaembedded.com.

For embedded operating systems, Windows CE.NET and XP Embedded related driver supports can be found in the VIA Arena website at www.viaarena.com.

Linux Driver Support

VIA EPIA EN mainboards have a very high degree of support under Linux.

Support and drivers are provided through various methods including:

- Drivers provided by VIA
  - Using a driver built into a distribution package
  - Visiting VIA Arena website at www.viaarena.com for latest updates on a monthly basis
- Installing a third party driver (such as the ALSA driver from the Advanced Linux Sound Architecture project for integrated audio)

For OEM clients and system integrators developing a product for long term production, other code and resources may also be made available. You can submit a request either through the Developers portal on VIA Arena, or through your VEPD support contact. Alternatively, VIA can work further towards providing additional drivers to suite your specific needs.

Contact

For more information on the VIA EPIA EN-Series Mini ITX Mainboard contact your sales representative or visit our website at **www.viaembedded.com**

Taiwan Headquarters
1F, 531 Zhong-Zheng Road
Xindian District, New Taipei City
231,
Taiwan

TEL: 886.2.2218.5452
FAX: 886.2.2218.5453
Email: embedded@via.com.tw

USA
940 Mission Court
Fremont, CA 94539
USA

TEL: 1.510.683.3300
FAX: 1.510.687.4654
Email: embedded@viatech.com

Europe
In den Dauen 6
53117 Bonn
Germany

TEL: 49.228.688565.0
FAX: 49.228.688565.19
Email: embedded@via-tech.de

China
Tsinghua Science Park Bldg. 7
No. 1 Zongguancun East Road
Haiden District, Beijing 100084

TEL: 86.10.59852288
FAX: 86.10.59852299
Email: embedded@viatech.com.cn

Japan
3-15-7 Ebisu MT Bldg. 6F
Higashi, Shibuya-ku
Tokyo 150-0011

TEL: 81.3.5466.1637
FAX: 81.3.5466.1638
Email: embedded@viatech.co.jp

Korea
2F, Sangjin Bldg., 417
Dogok-Dong, Gangnam-Gu
Seoul 135-854

TEL: 82.2.571.2986
FAX: 82.2.571.2987
Email: embedded@via-korea.com