M9N MAIN BOARD -1

ILINK

IP002.SCH	CPU BOARD SLOT
IP003.SCH	POWER & CONNECTORS
IP004.SCH	SOFTWARE POWER DOWN CKT
IP005.SCH	CLOCK BUFFER
IP006.SCH	PRIMARY PCI SLOT 1 2 3
IP007.SCH	7880 CHANNEL 1
IP008.SCH	7880 CHANNEL 2
IP009.SCH	SCSI CONNECTORS
IP010.SCH	RAID PORT CONNECTOR
IP011.SCH	VGA ATI264VT
IP012.SCH	VRAM
IP013.SCH	LAN
IP014.SCH	P2P BRIDGE DEC21052
IP015.SCH	PIIX3
IP016.SCH	PIIX4
IP017.SCH	E-IDE CONNECTORS
IP018.SCH	DECODER & XD BUFFER
IP019.SCH	I/O APIC
IP020.SCH	ISA SLOT 1 2
IP021.SCH	SMC935
IP022.SCH	4A0 & COM PORTS & FLASH ROM
IP023.SCH	KEYBD/MOUSE FDD CONNECTORS
IP024.SCH	VGA & PRINTER CONNECTOR
IP025.SCH	ASM
IP026.SCH	RDM
IP027.SCH	SECONDARY PCI SLOT 4 5
IP028.SCH	DECOUPLING CAPACITORS
IP029.SCH	USB PORTS
IP030.SCH	4A1 & 4A4 PORTS
IP031.SCH	4A2 & 4A3 & 4A5 PORTS

NSBD		
Title: PAGE INDEX		
Size: A3	Document Number: M9N MAIN BOARD	REV: 1
Date: April 23, 1997	Sheet 1 of 31	

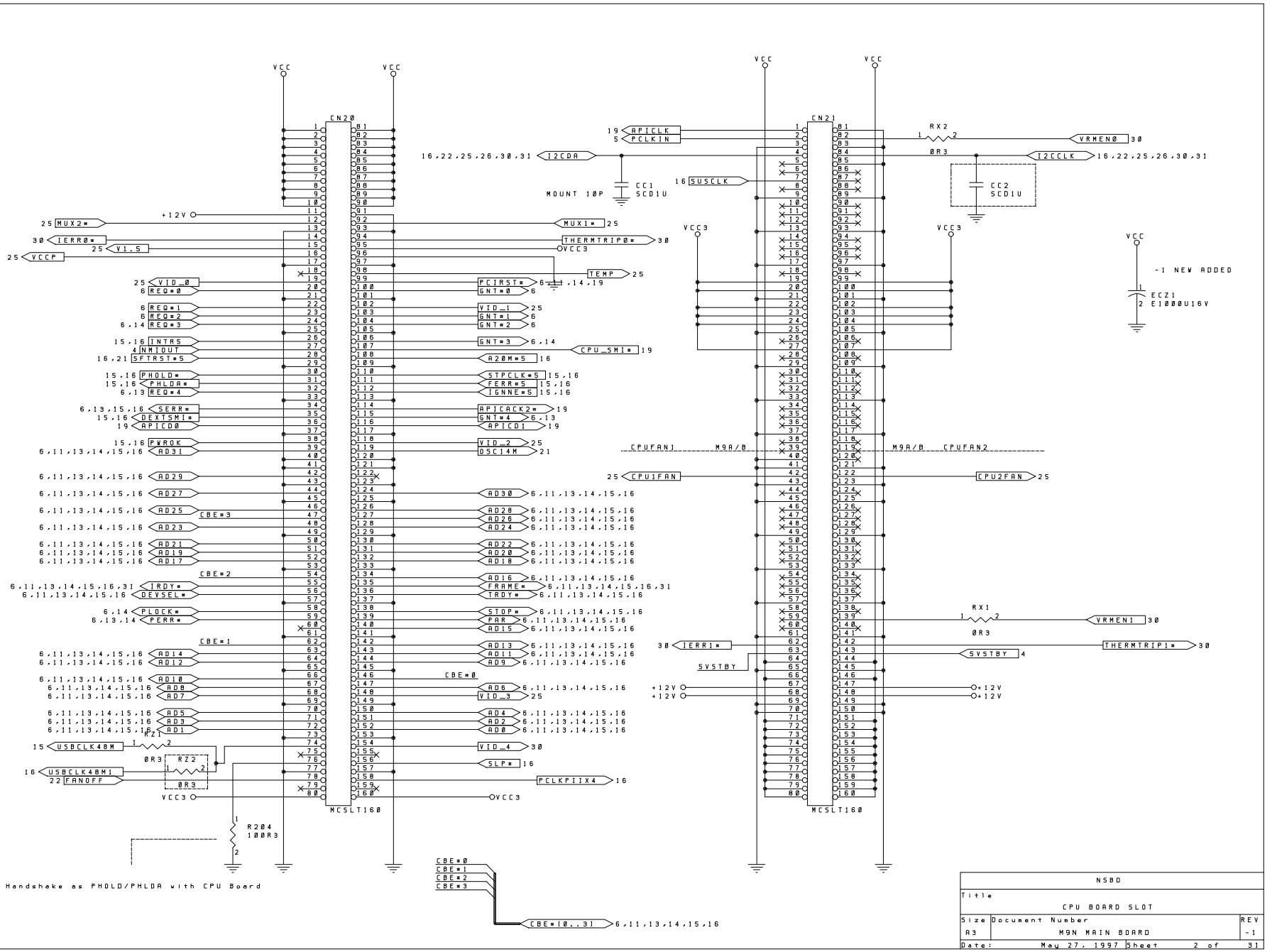

NSBD		
Title: CPU BOARD SLOT		
Size: A3	Document Number: M9N MAIN BOARD	REV: -1
Date: May 27, 1997	Sheet 2 of 31	

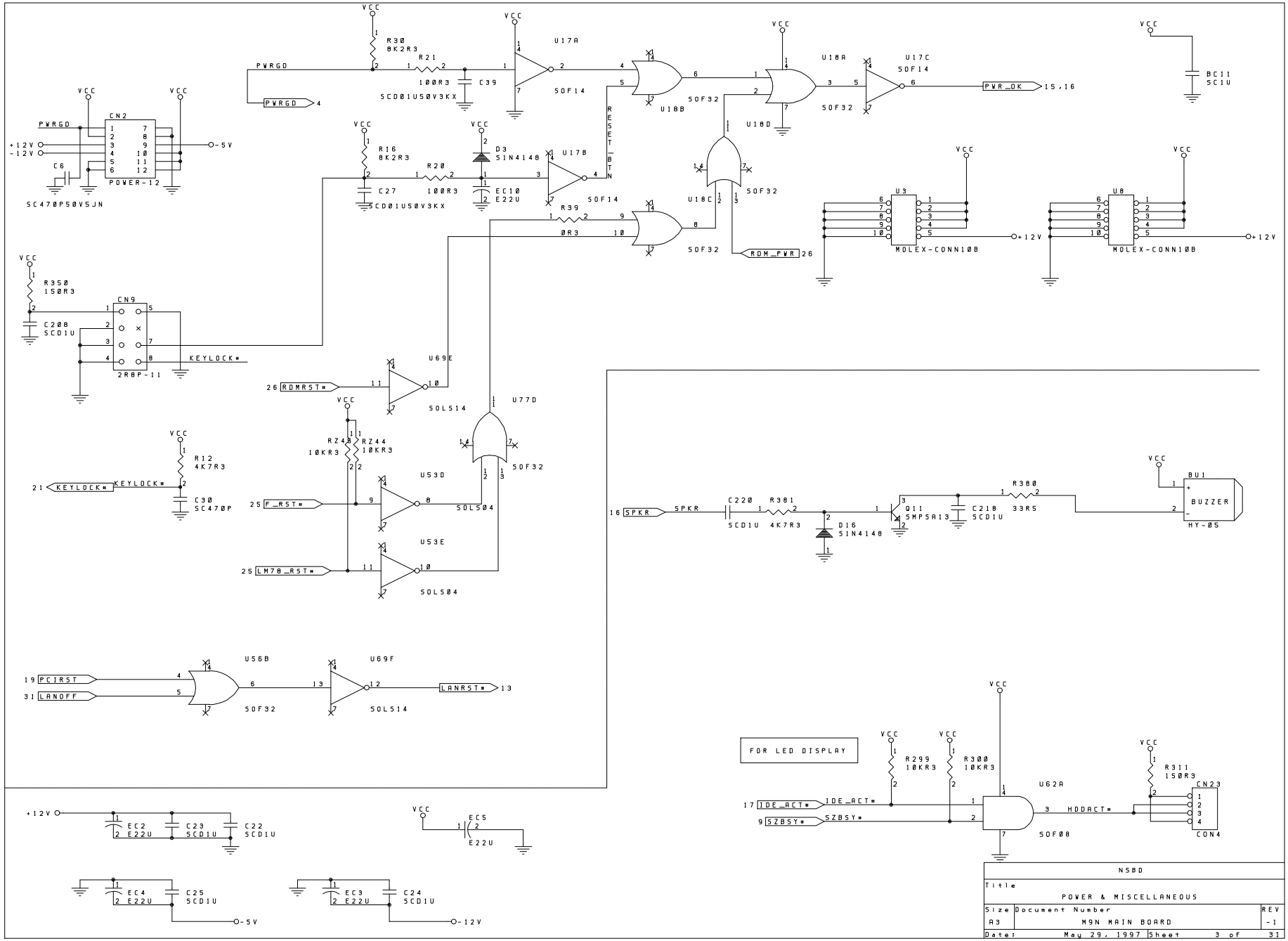
VCC
R30 8K2R3
R21 100R3
C39 5CD01U50V3KX
PWRGD
U17A 50F14
U18B 50F32
U18A
U17C 50F14
PWR_OK 15,16
BC11 5C1U
CN2 POWER-12
+12V
-12V
-5V
C6 5C470P50V5JN
R16 8K2R3
R20 100R3
C27 5CD01U50V3KX
D3 5IN4148
EC10 E22U
U17B 50F14
RESET_BTN
U18C 50F32
U18D 50F32
RDM_PWR 26
R39 0R3
U3 MOLEX-CONN10B
U8 MOLEX-CONN10B
R350 150R3
C208 5CD1U
CN9 2R8P-11
KEYLOCK*
U69E 50L514
26 RDMRST*
U77D 50F32
RZ43 10KR3
RZ44 10KR3
R12 4K7R3
C30 5C470P
21 KEYLOCK*
U53D 50L504
25 F_RST*
U53E 50L504
25 LM78_RST*
19 PCIRST
31 LANOFF
U56B 50F32
U69F 50L514
LANRST* 13
16 SPKR
C220 5CD1U
R381 4K7R3
Q11 5MPSA13
D16 5IN4148
C218 5CD1U
R380 33R5
BU1 BUZZER HY-05
FOR LED DISPLAY
R299 10KR3
R300 10KR3
17 IDE_ACT*
9 SZBSY*
U62A 50F08
HDDACT*
R311 150R3
CN23 CON4
EC2 E22U
C23 5CD1U
C22 5CD1U
EC5 E22U
EC4 E22U
C25 5CD1U
EC3 E22U
C24 5CD1U
NSBD
Title
POWER & MISCELLANEOUS
Size A3
Document Number M9N MAIN BOARD
REV -1
Date: May 29, 1997
Sheet 3 of 31

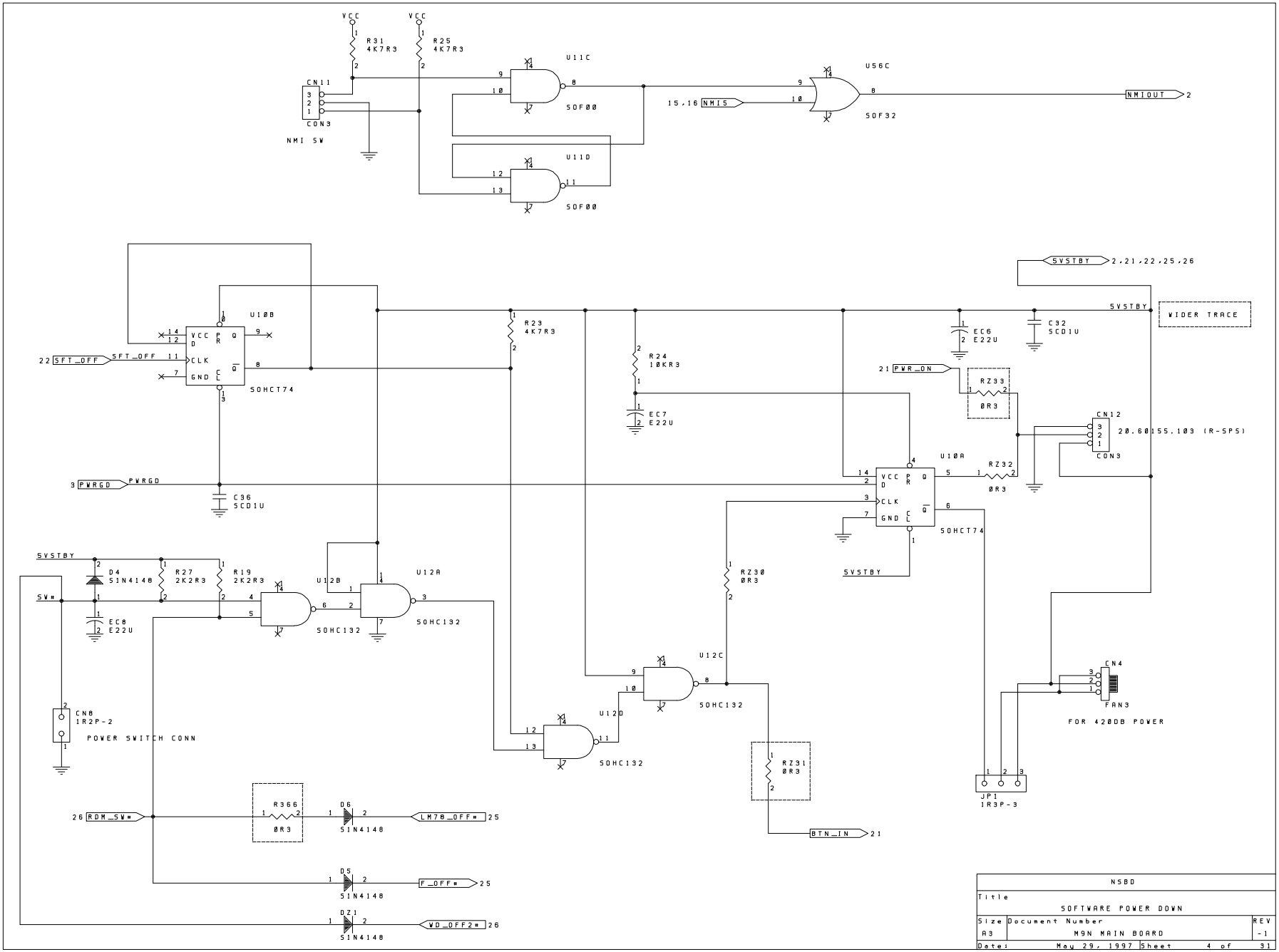
VCC
R31 4K7R3
R25 4K7R3
CN11
CON3
NMI SW
U11C
SOF00
U11D
SOF00
U56C
SOF32
15,16 NMIS
NMIOUT 2
SVSTBY 2,21,22,25,26
WIDER TRACE
U10B
SOHCT74
22 SFT_OFF
R23 4K7R3
R24 10KR3
EC7 E22U
EC6 E22U
C32 5CD1U
21 PWR_ON
RZ33 0R3
CN12
20.60155.103 (R-SPS)
CON3
U10A
RZ32 0R3
3 PWRGD
C36 5CD1U
D4 S1N4148
R27 2K2R3
R19 2K2R3
U12B
U12A
SOHC132
EC8 E22U
SW#
RZ30 0R3
U12C
U12D
CN8 1R2P-2
POWER SWITCH CONN
CN4
FAN3
FOR 420DB POWER
JP1 1R3P-3
R366 0R3
D6 S1N4148
26 RDM_SW#
LM78_OFF# 25
D5 S1N4148
F_OFF# 25
DZ1 S1N4148
WD_OFF2# 26
RZ31 0R3
BTN_IN 21
NSBD
Title
SOFTWARE POWER DOWN
Size A3
Document Number M9N MAIN BOARD
REV -1
Date: May 29, 1997
Sheet 4 of 31

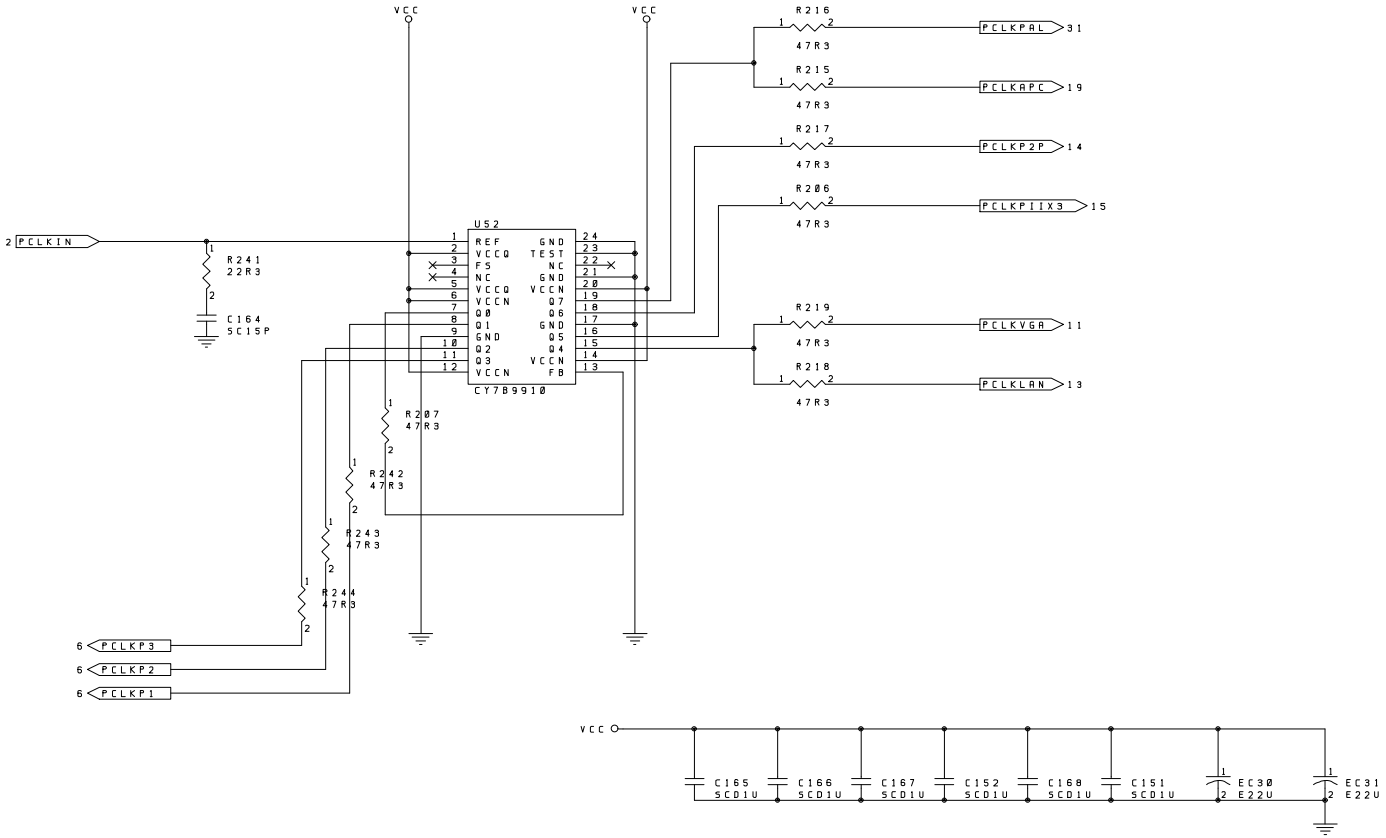

NSBD		
Title: CLOCK BUFFER		
Size: A3	Document Number: M9N MAIN BOARD	REV: -1
Date: May 29, 1997	Sheet 5 of 31	

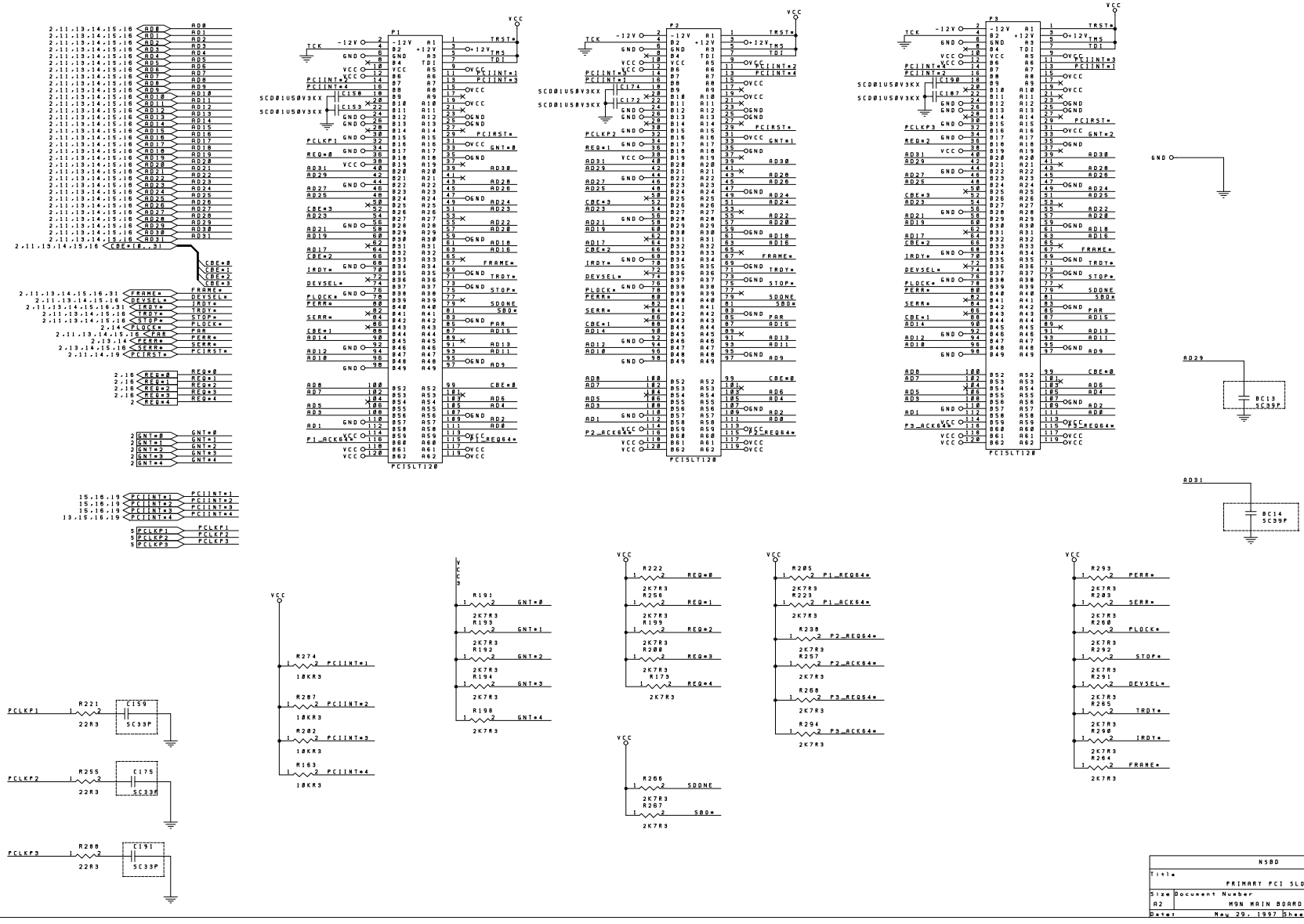

	N58D	
Title	PRIMARY PCI SLOT	
Size: A2	Document Number: M9N MAIN BOARD	REV: -1
Date: May 29, 1997	Sheet 6 of 31	

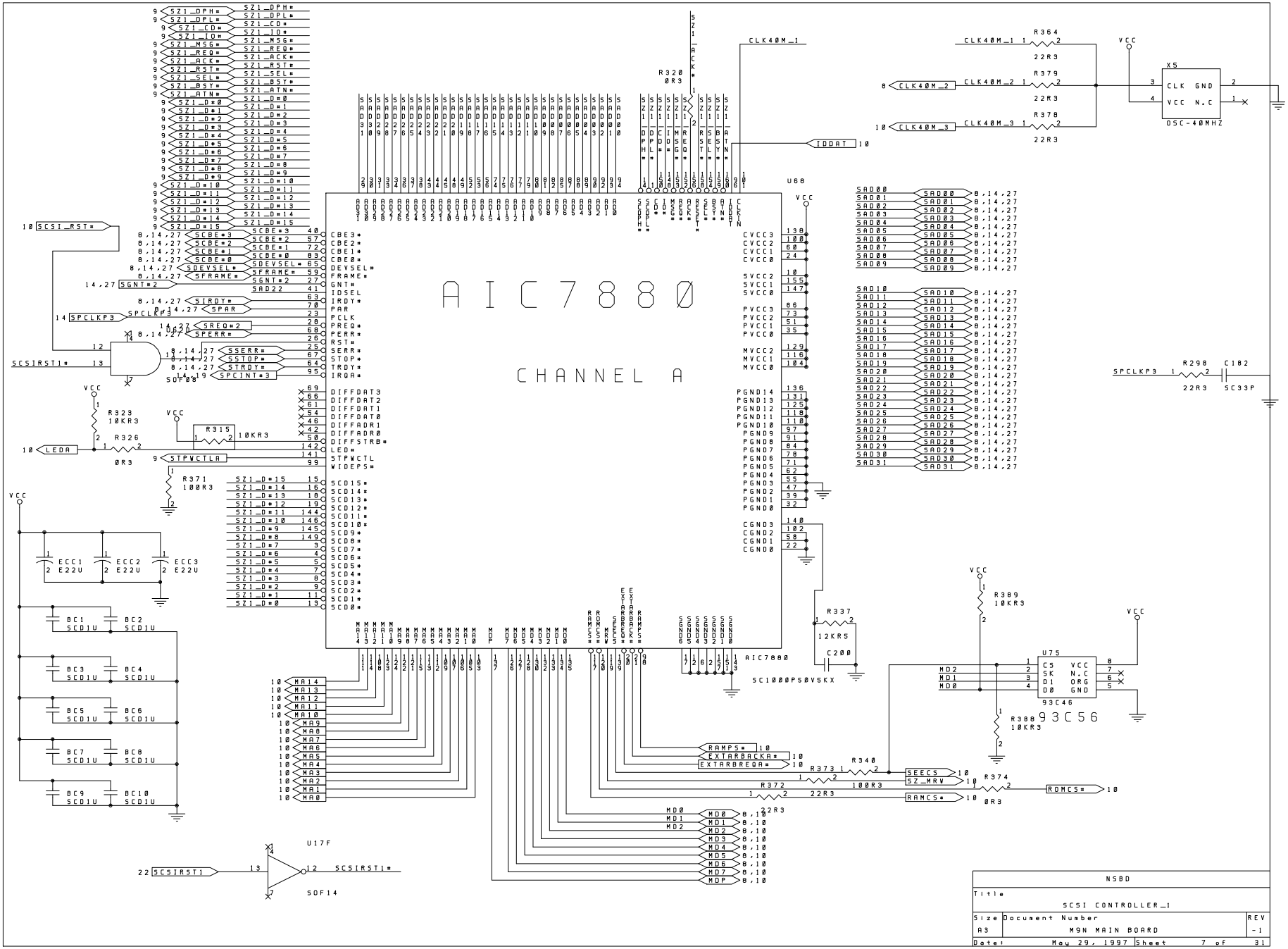
AIC7880
CHANNEL A
U68
U17F
5OF14
U75
93C46
93C56
X5
05C-40MHZ
AIC7880
SC1000PS0V5KX
R320 0R3
R364 22R3
R379 22R3
R378 22R3
R323 10KR3
R326 0R3
R315 10KR3
R371 100R3
R337 12KR5
C200
R389 10KR3
R388 10KR3
R340
R373 100R3
R372 22R3
R374 0R3
R298 22R3
C182 5C33P
ECC1 E22U
ECC2 E22U
ECC3 E22U
BC1 SCD1U
BC2 SCD1U
BC3 SCD1U
BC4 SCD1U
BC5 SCD1U
BC6 SCD1U
BC7 SCD1U
BC8 SCD1U
BC9 SCD1U
BC10 SCD1U
CLK40M_1
CLK40M_2
CLK40M_3
IDDAT
SZ1_ACK*
SCSIRST1
SCSIRST1*
SEECS
SZ_MRV
RAMCS*
ROMCS*
RAMPS*
EXTARBACKA*
EXTARBREQA*
VCC
NSBD
Title
SCSI CONTROLLER_1
Size A3
Document Number M9N MAIN BOARD
REV -1
Date: May 29, 1997 Sheet 7 of 31

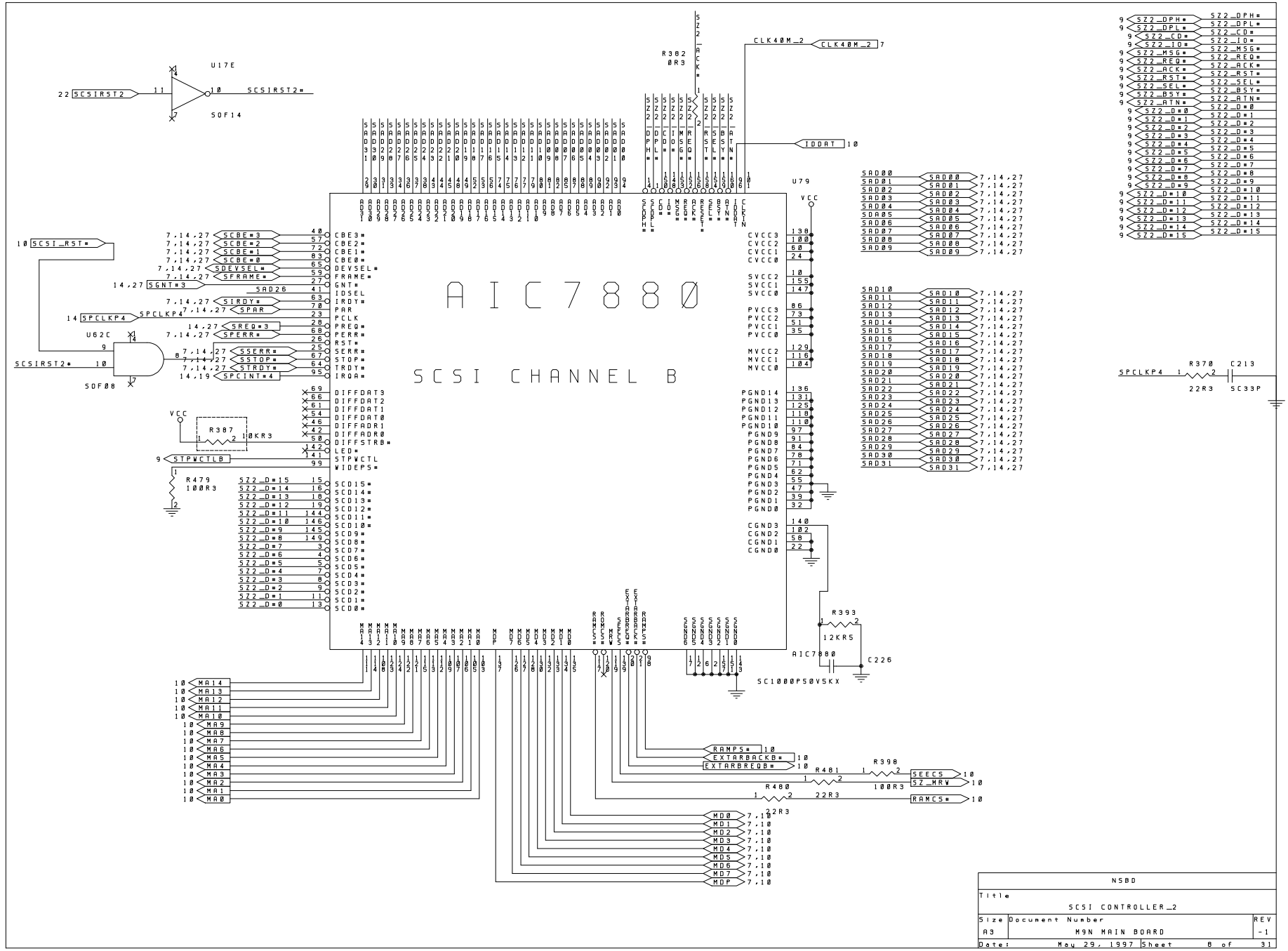

NSBD			
Title: SCSI CONTROLLER_2			
Size: A3	Document Number: M9N MAIN BOARD		REV: -1
Date: May 29, 1997	Sheet: 8 of 31		

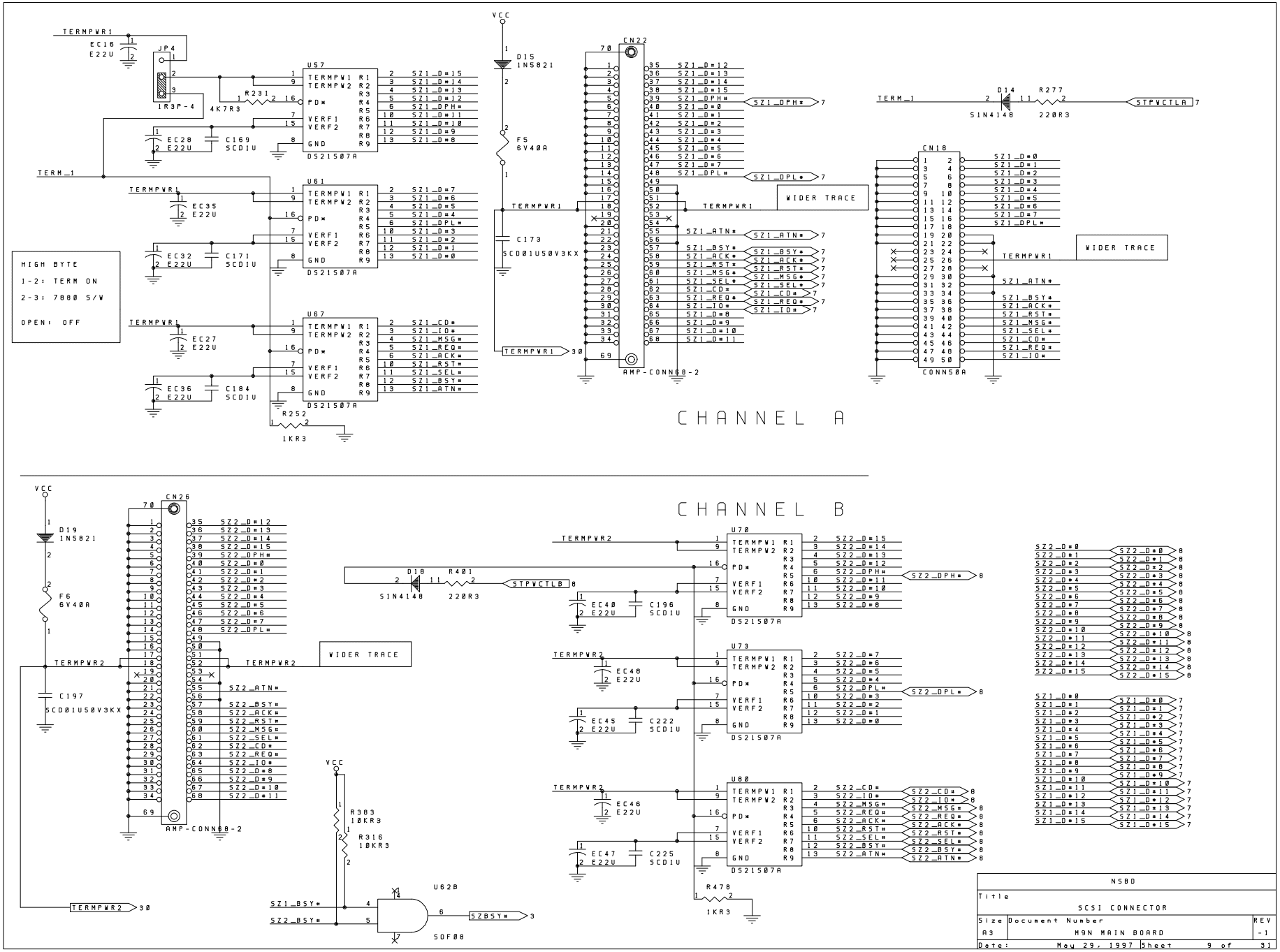
CHANNEL A
CHANNEL B
HIGH BYTE
1-2: TERM ON
2-3: 7080 S/W
OPEN: OFF
WIDER TRACE
AMP-CONN68-2
DS21507A
CONN50A
50F08
NSBD
SCSI CONNECTOR
M9N MAIN BOARD
May 29, 1997

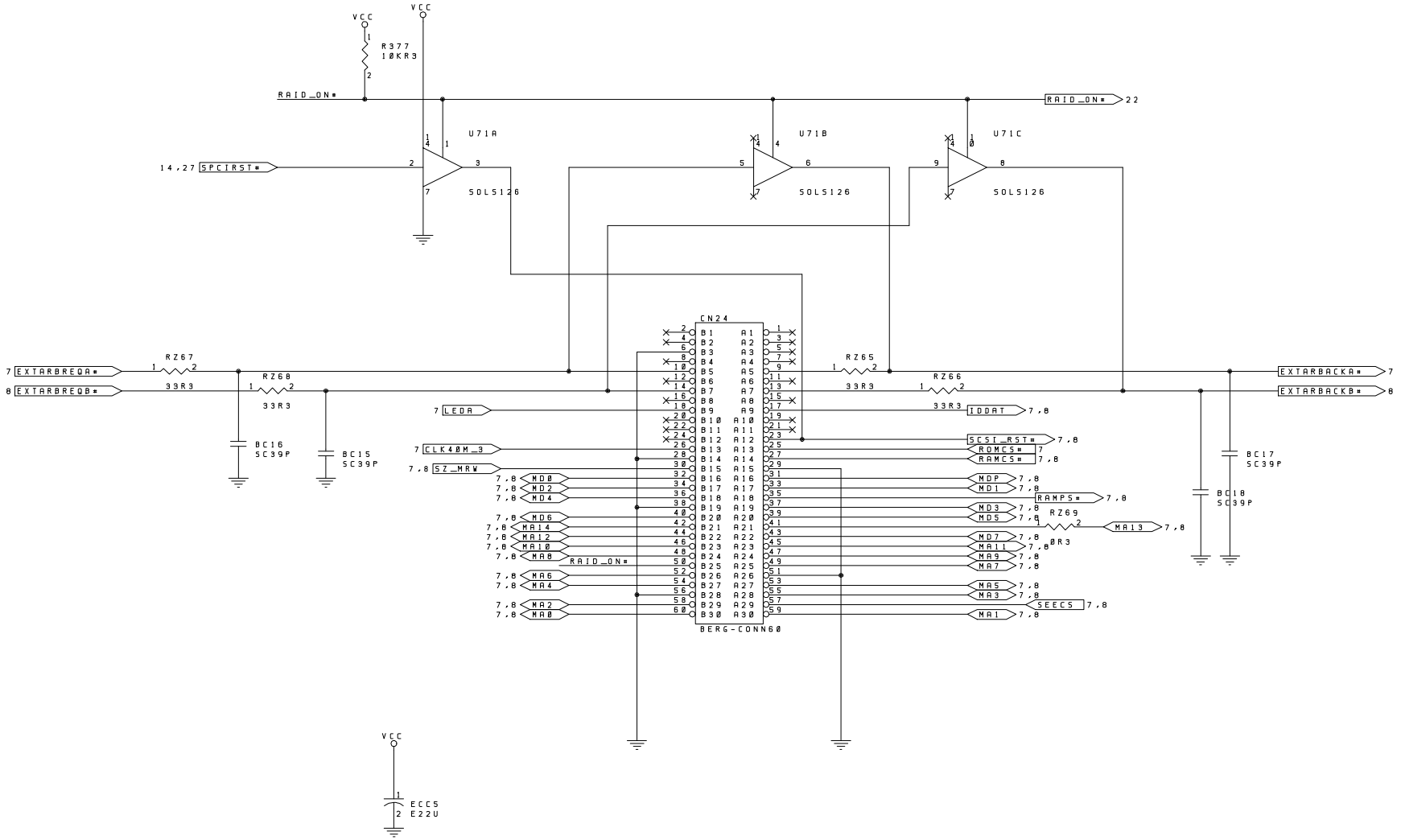

NSBD		
Title: RAID PORT CONNECTOR		
Size: A3	Document Number: M9N MAIN BOARD	REV: -1
Date: May 29, 1997	Sheet 10 of 31	

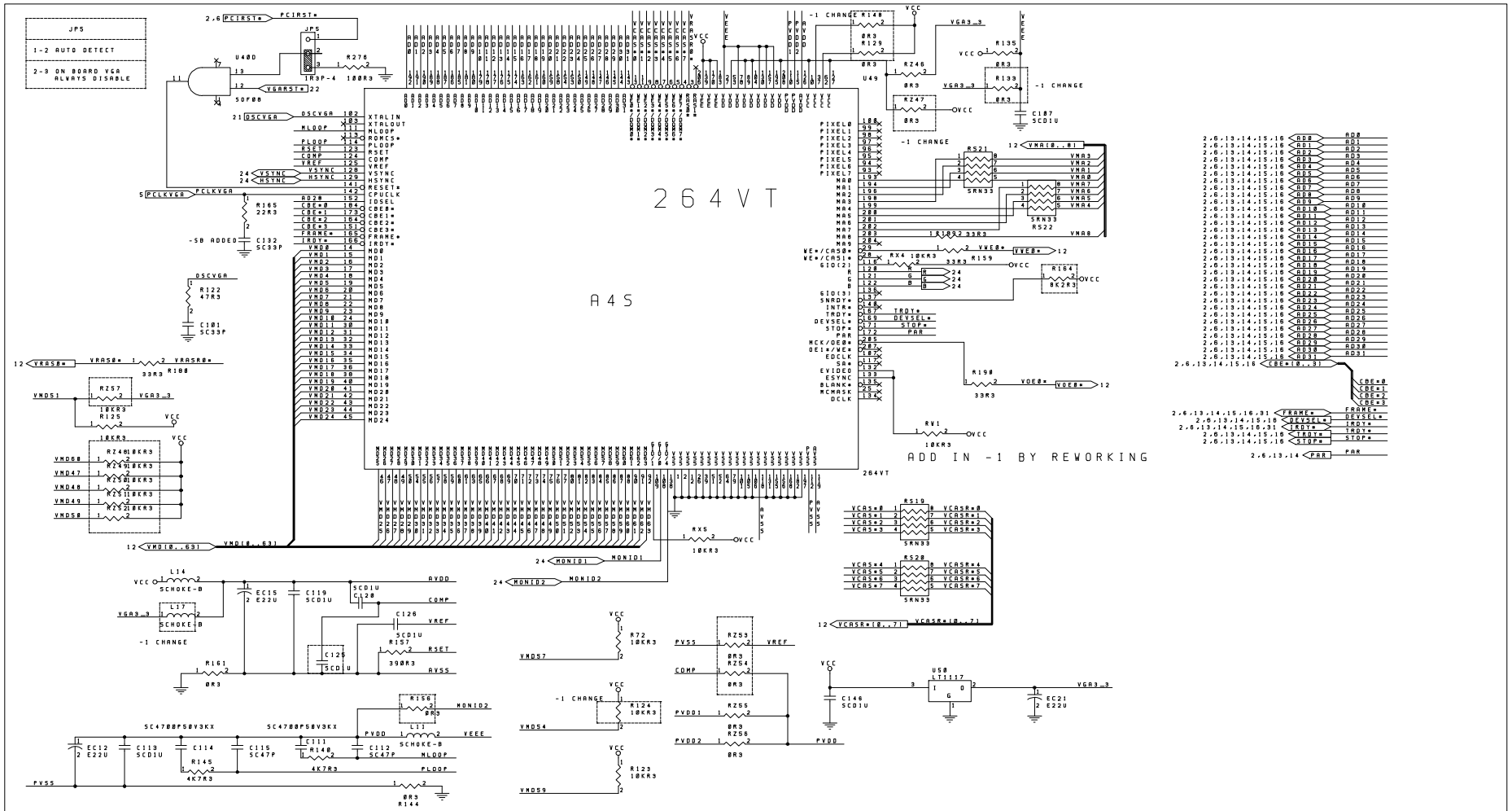
JP5
1-2 AUTO DETECT
2-3 ON BOARD VGA ALWAYS DISABLE
264VT
A45
-1 CHANGE
ADD IN -1 BY REWORKING
N58D
VGA CONTROLLER
M9N MAIN BOARD
May 29, 1997 Sheet 11 of 31

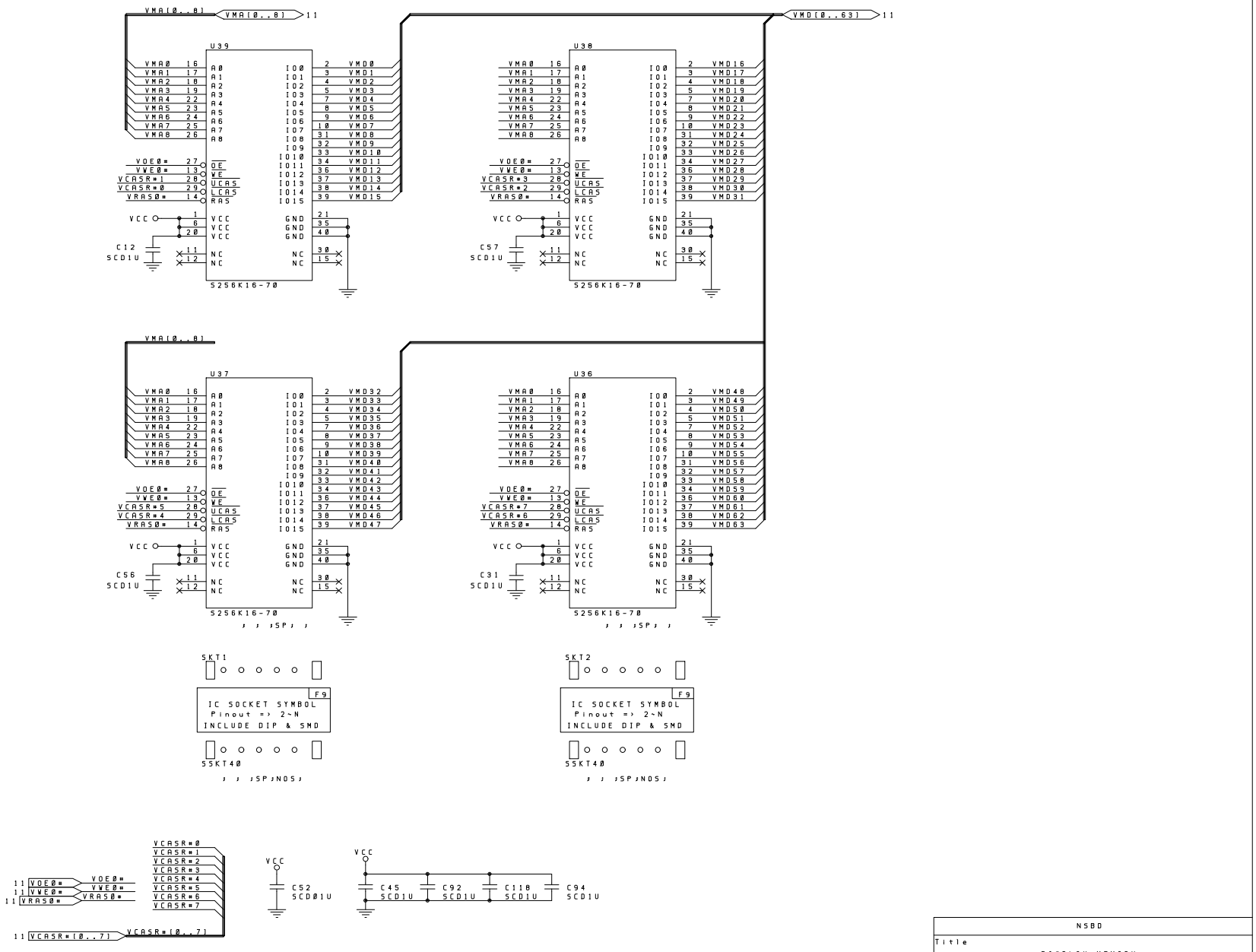

NSBD		
Title: DISPLAY MEMORY		
Size: A3	Document Number: M9N MAIN BOARD	REV: -1
Date: May 29, 1997	Sheet 12 of 31	

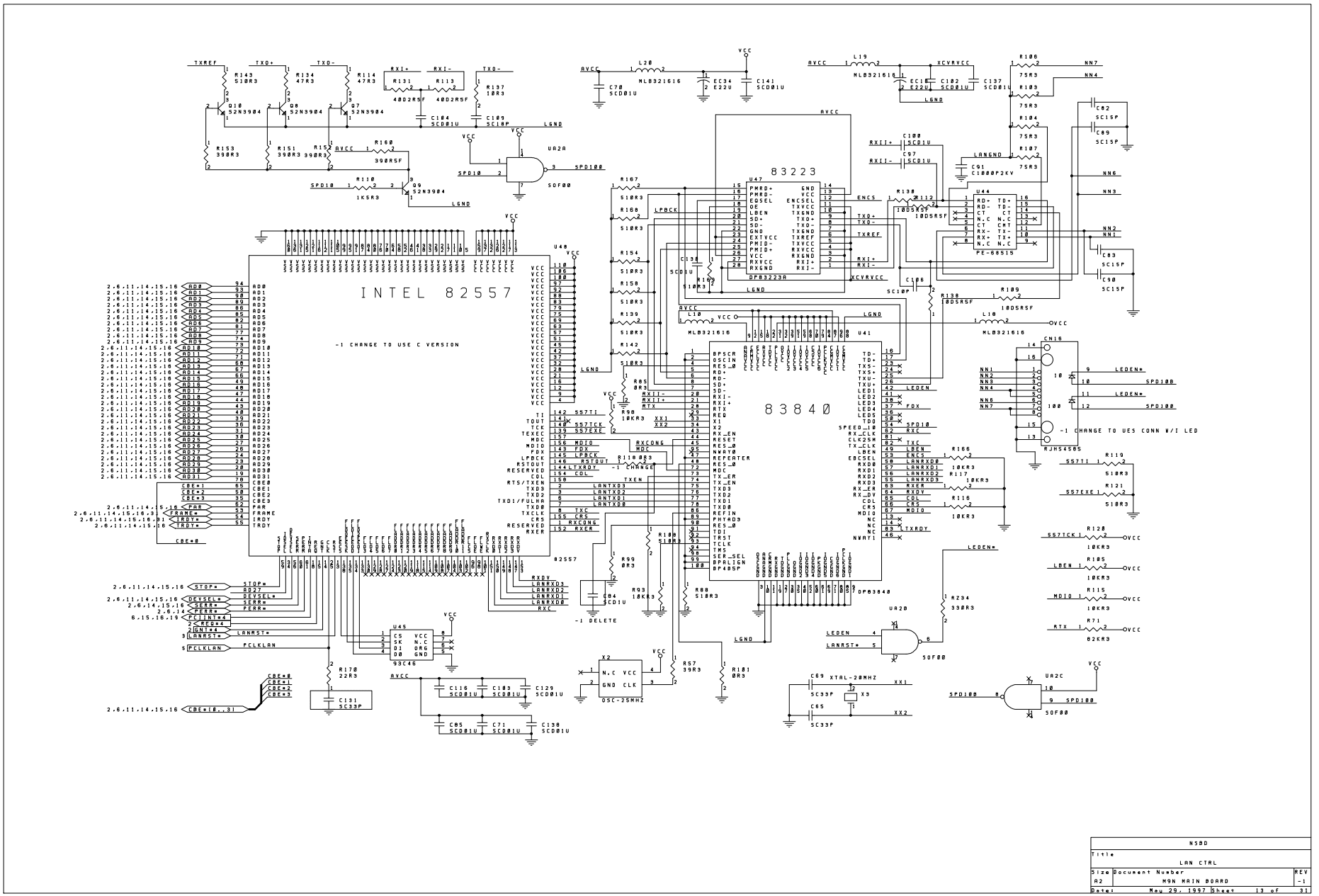

N5BD		
Title	LAN CTRL	
Size A2	Document Number M9N MAIN BOARD	REV -1
Date: May 29, 1997	Sheet 13 of 31	

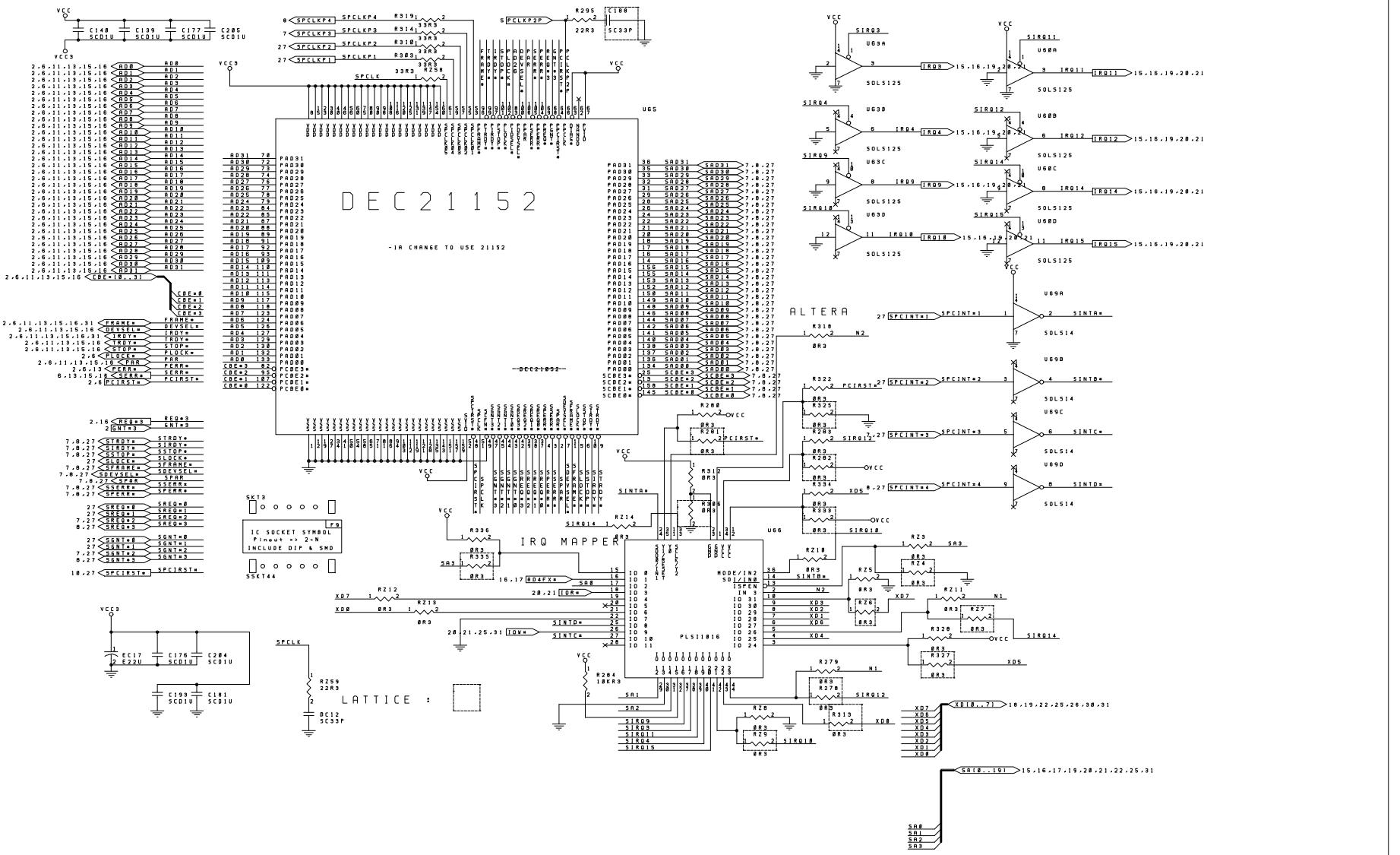
DEC21152
-1A CHANGE TO USE 21152
IRQ MAPPER
PLS11016
ALTERA
LATTICE :
IC SOCKET SYMBOL
Pinout => 2-N
INCLUDE DIP & SMD
55KT44
N580
PCI TO PCI BRIDGE & IRQ MAPPER
M9N MAIN BOARD
May 29, 1997 Sheet 14 of 31

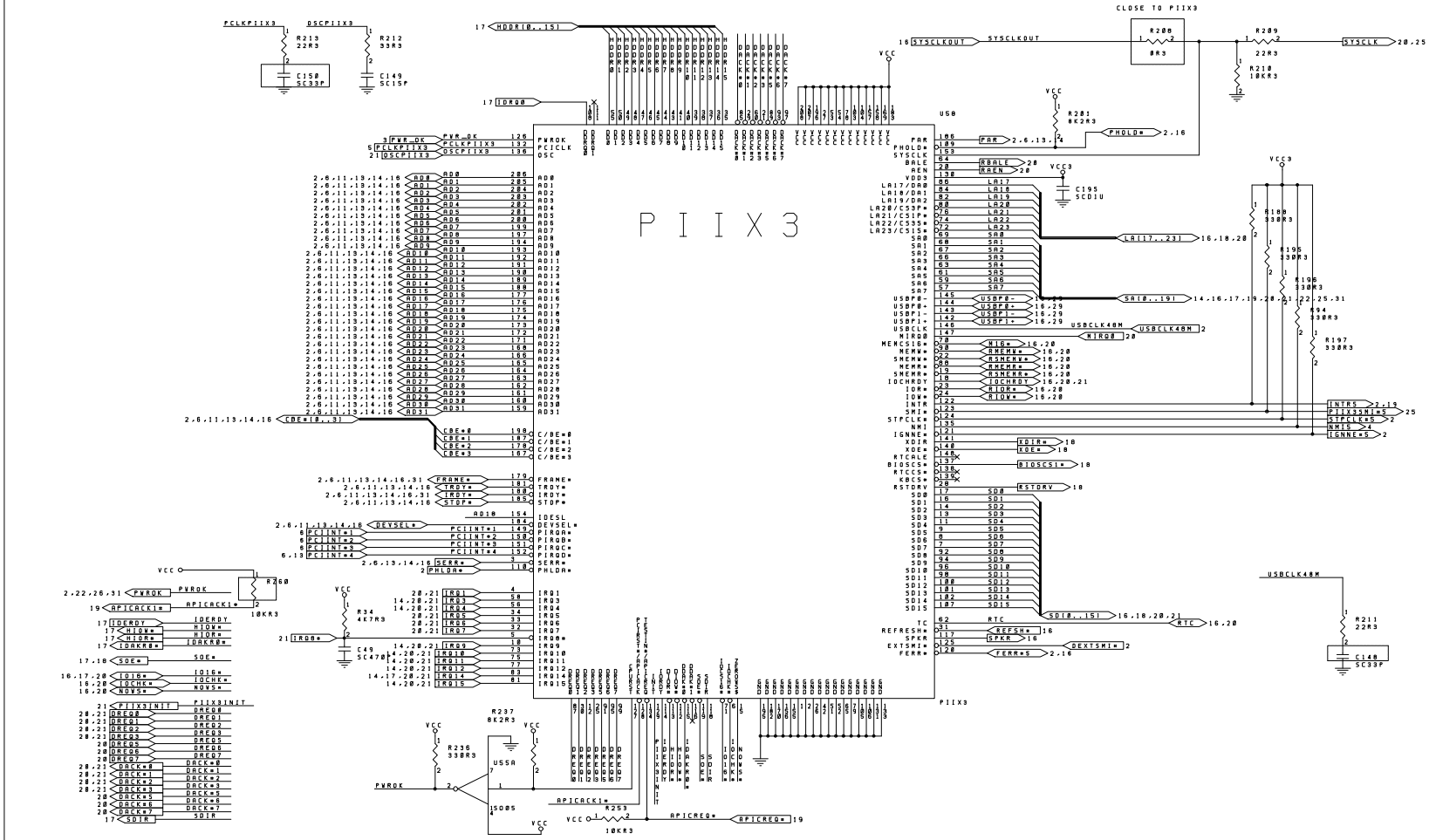

N50D		
Title: PIIX3		
Size: A2	Document Number: M9N MAIN BOARD	REV: -1
Date: May 29, 1997	Sheet 15 of 31	

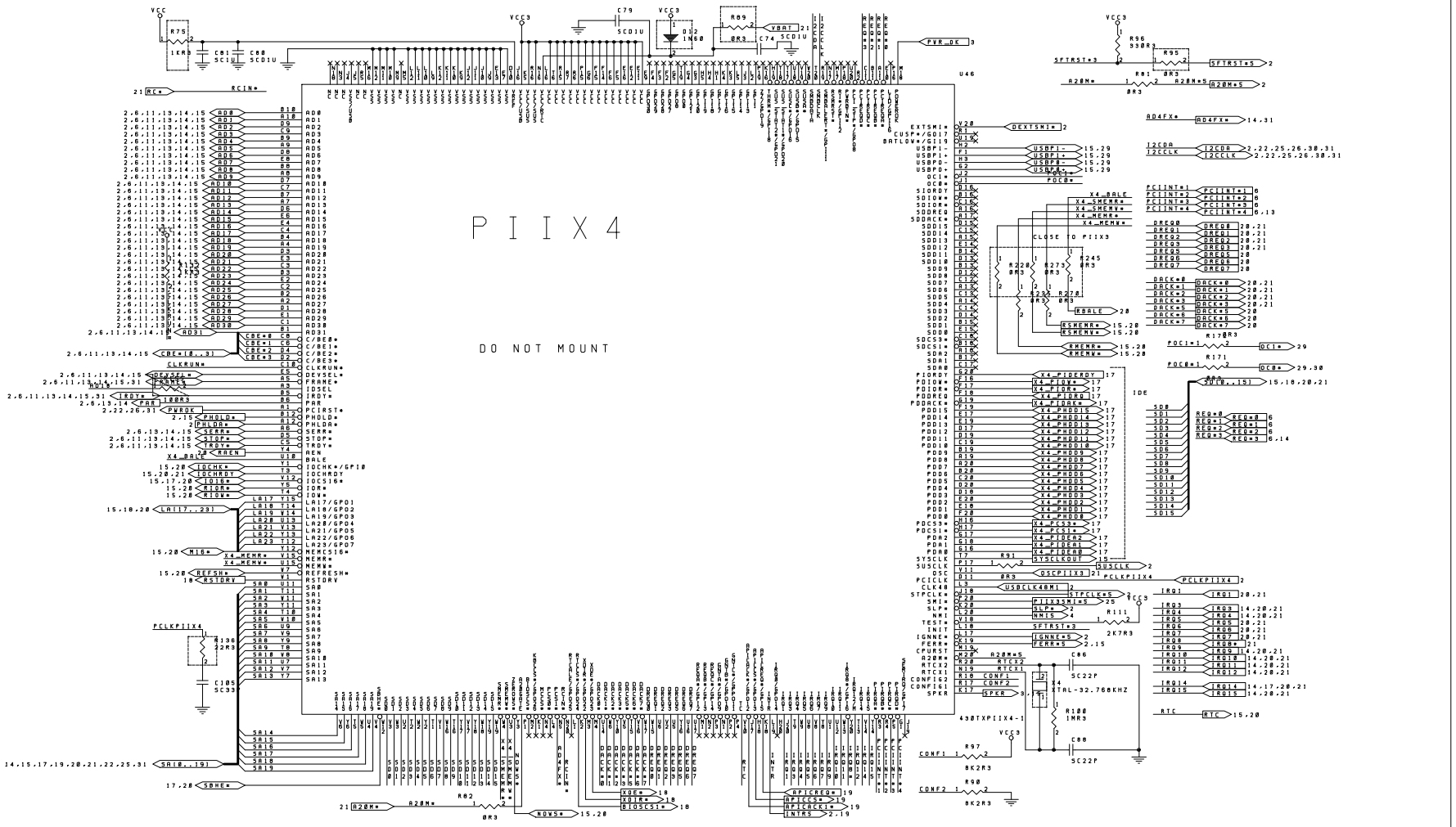

N580		
Title	PIIX4	
Size A2	Document Number M9N MAIN BOARD	REV -1
Date: May 29, 1997	Sheet 16 of 31	

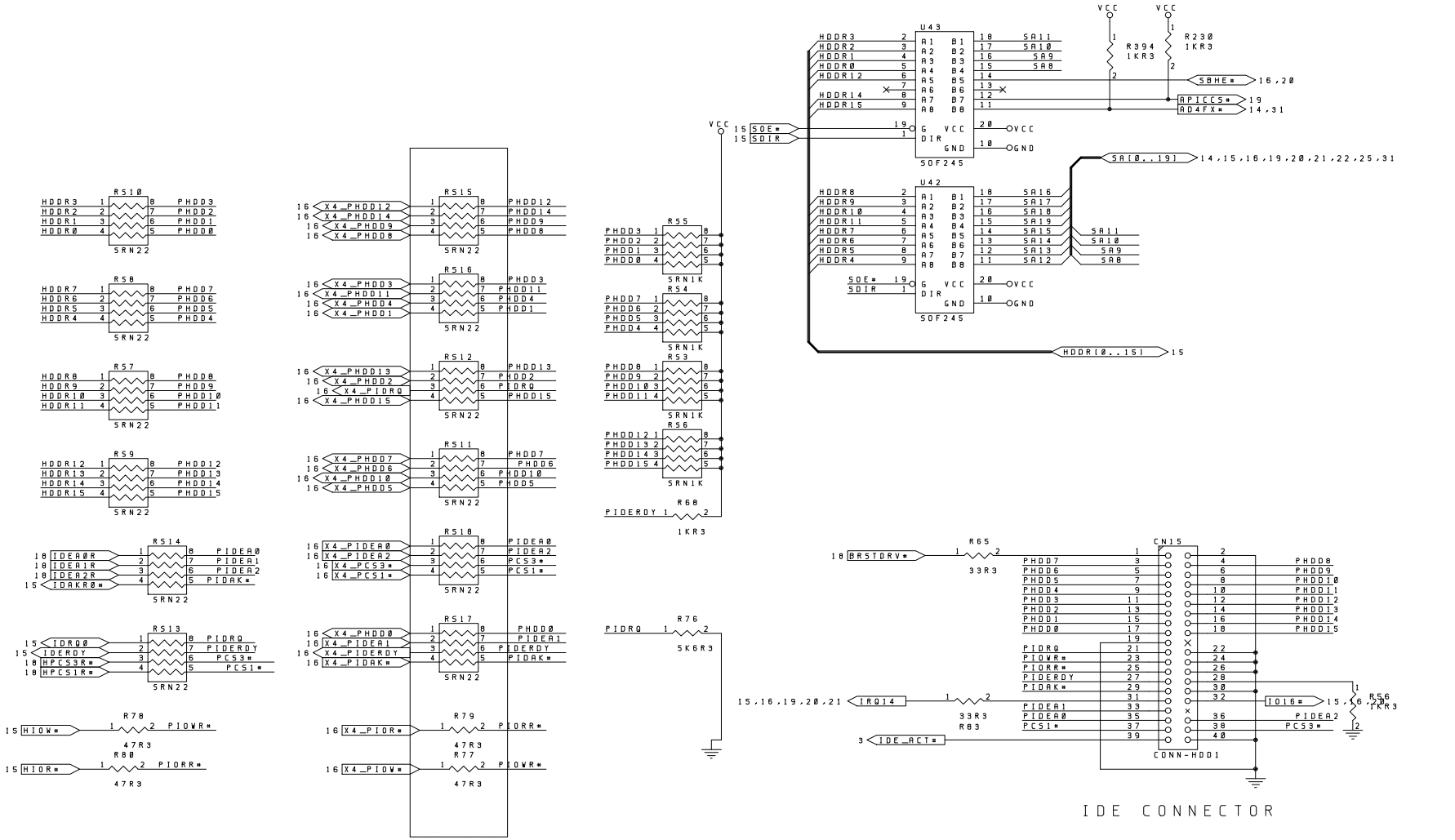

NSBD		
Title: EIDE CONNECTOR		
Size: A3	Document Number: M9N MAIN BOARD	REV: -1
Date: May 29, 1997	Sheet 17 of 31	

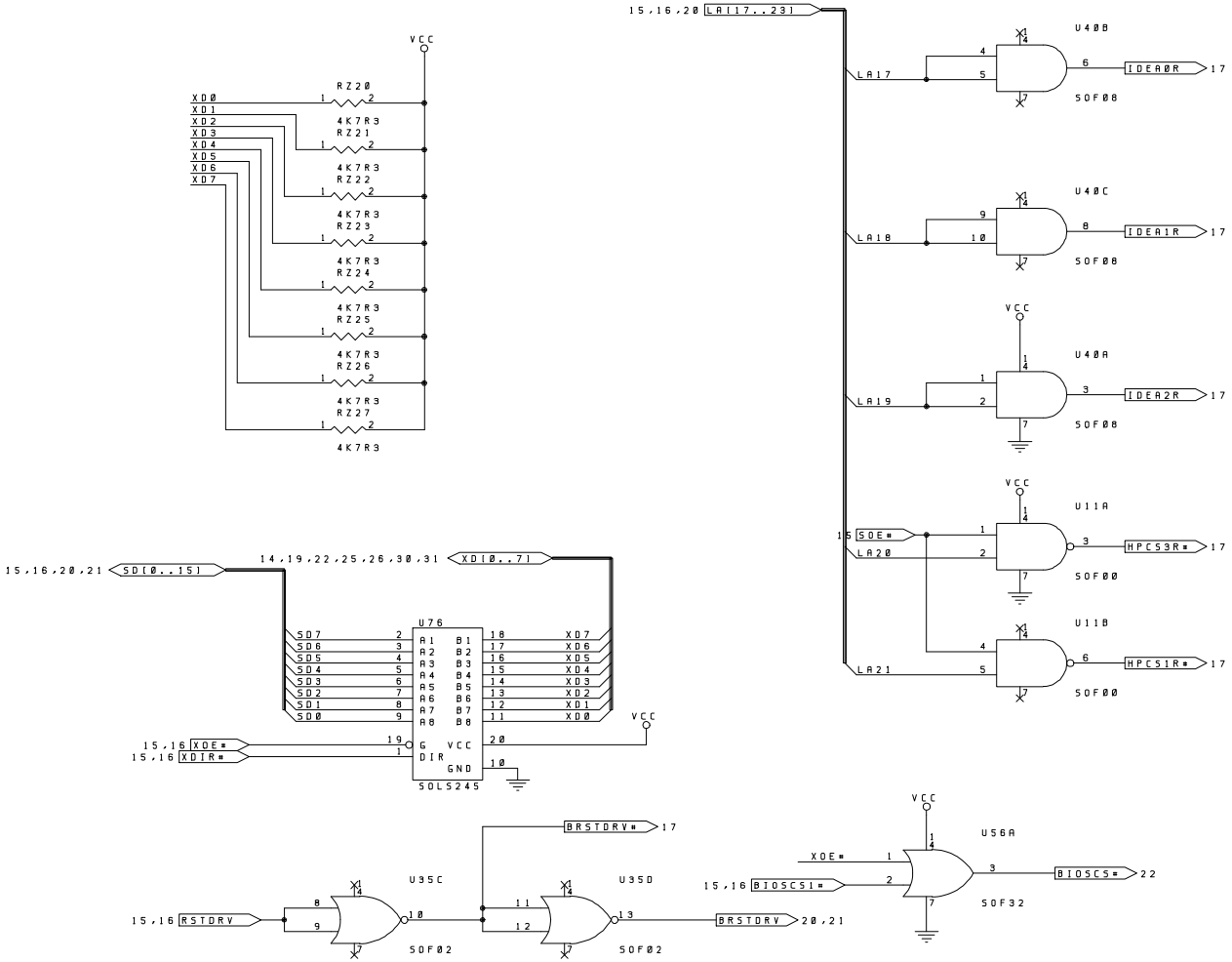

N58D		
Title: DECODER FOR SPECIAL IO PORT		
Size: A3	Document Number: M9N MAIN BOARD	REV: -1
Date: May 29, 1997	Sheet 18 of 31	

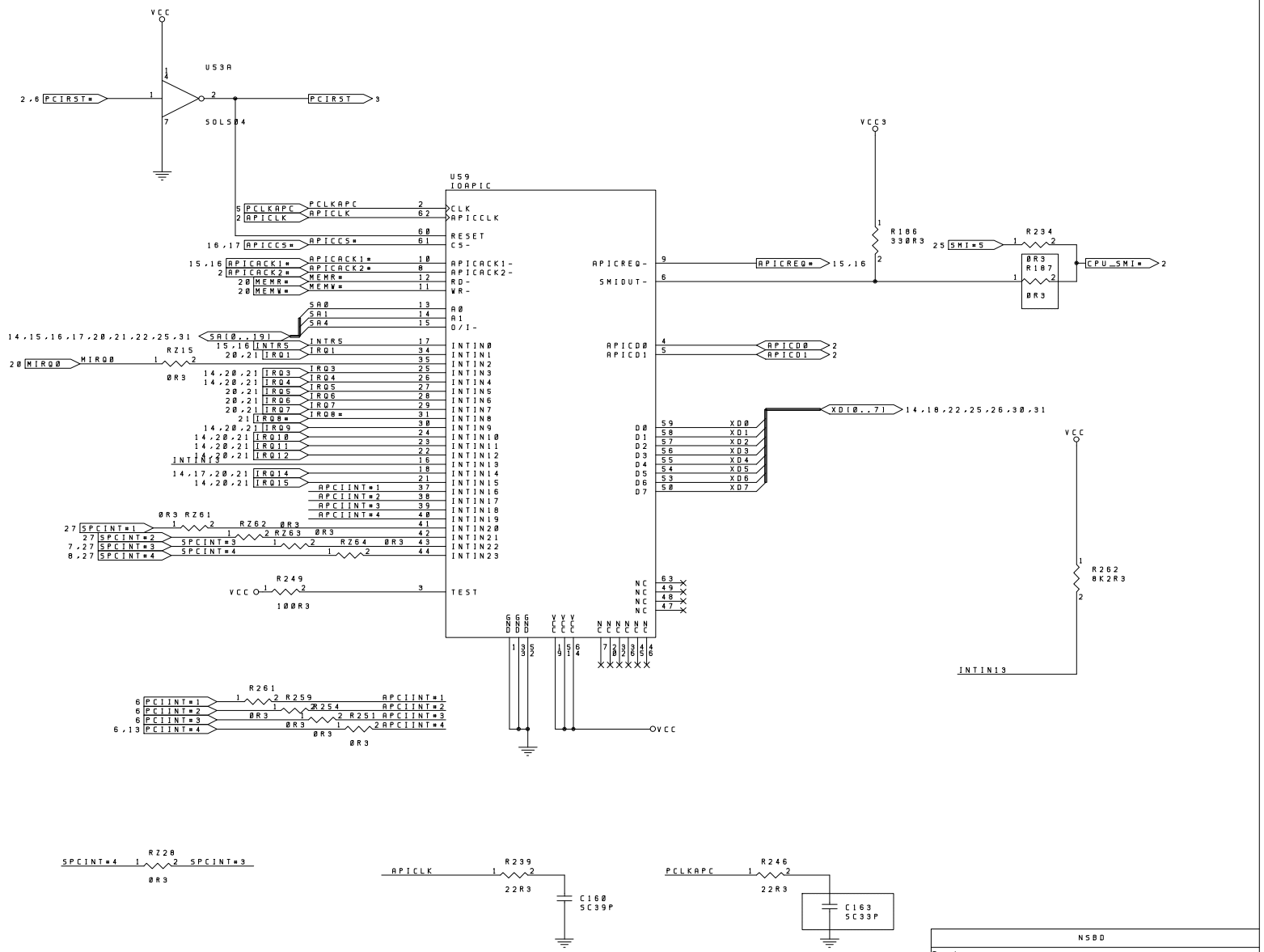

N58D		
Title: IOAPIC		
Size: A3	Document Number: M9N MAIN BOARD	REV: -1
Date: May 29, 1997	Sheet 19 of 31	

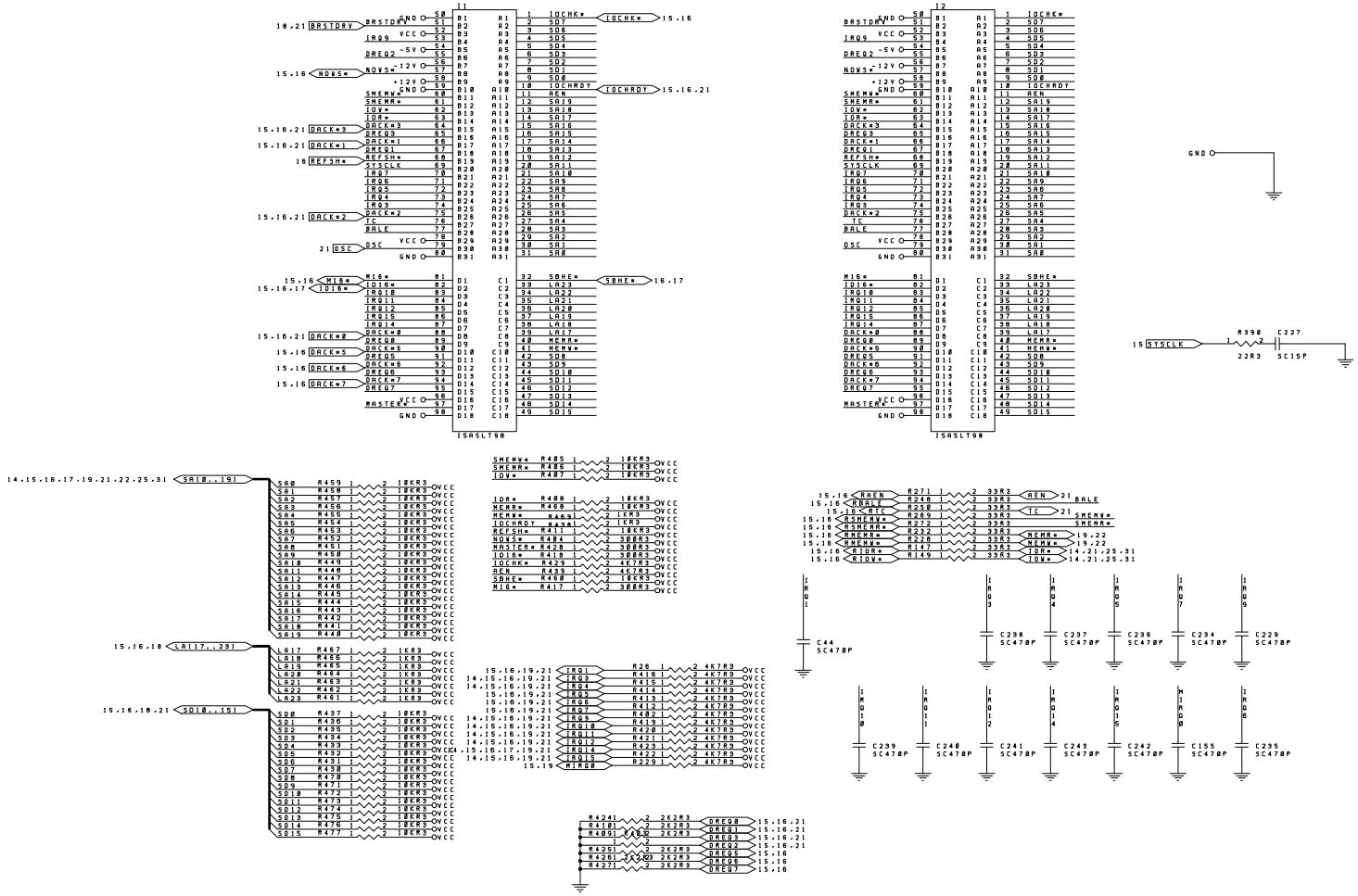

NSBD		
Title	ISA SLOTS	
Size A2	Document Number M9N MAIN BOARD	REV -1
Date: May 29, 1997	Sheet 20 of 31	

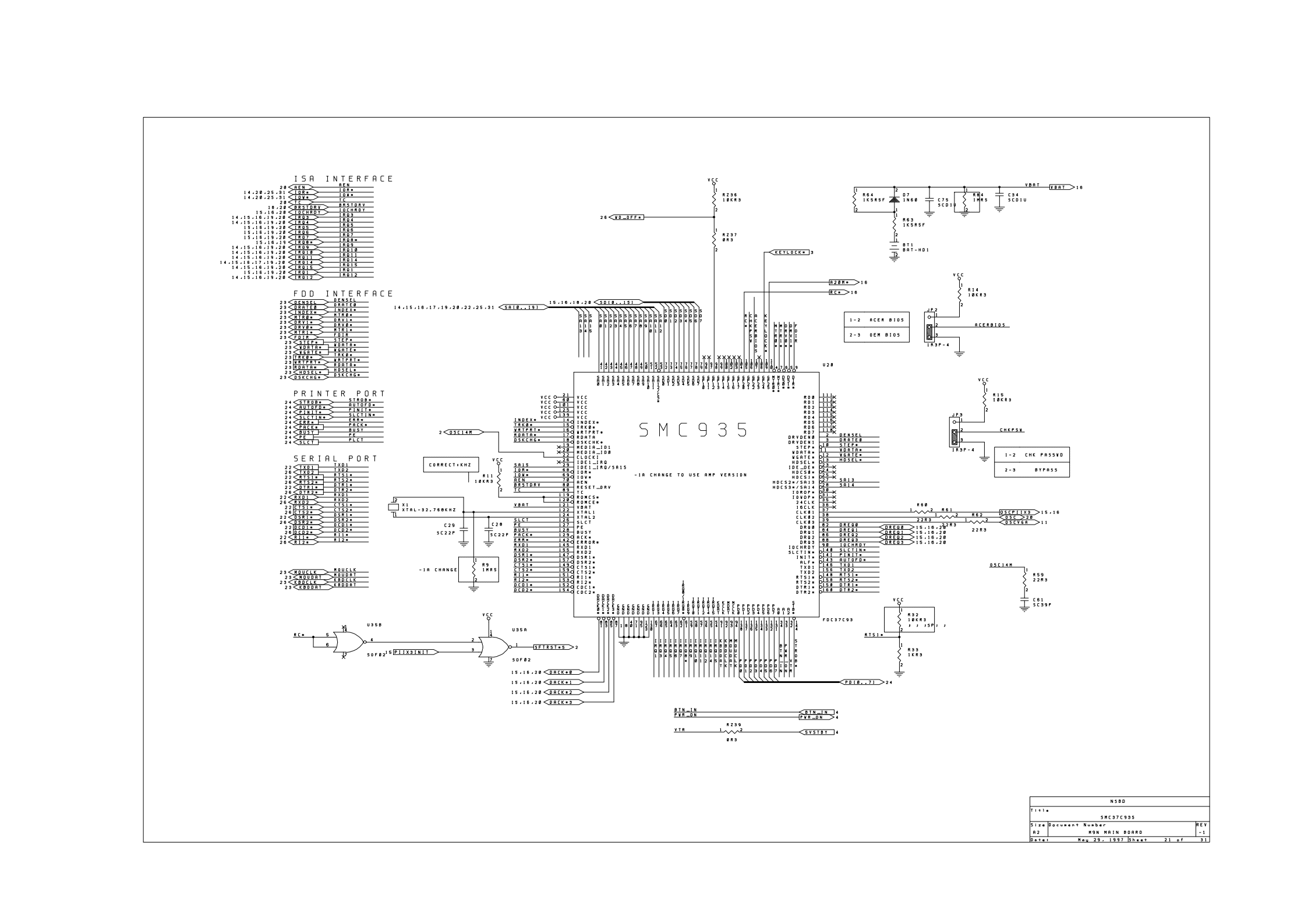

N5BD			
Title	SMC37C935		
Size	Document Number		REV
A2	M9N MAIN BOARD		-1
Date:	May 29, 1997	Sheet 21 of 31	

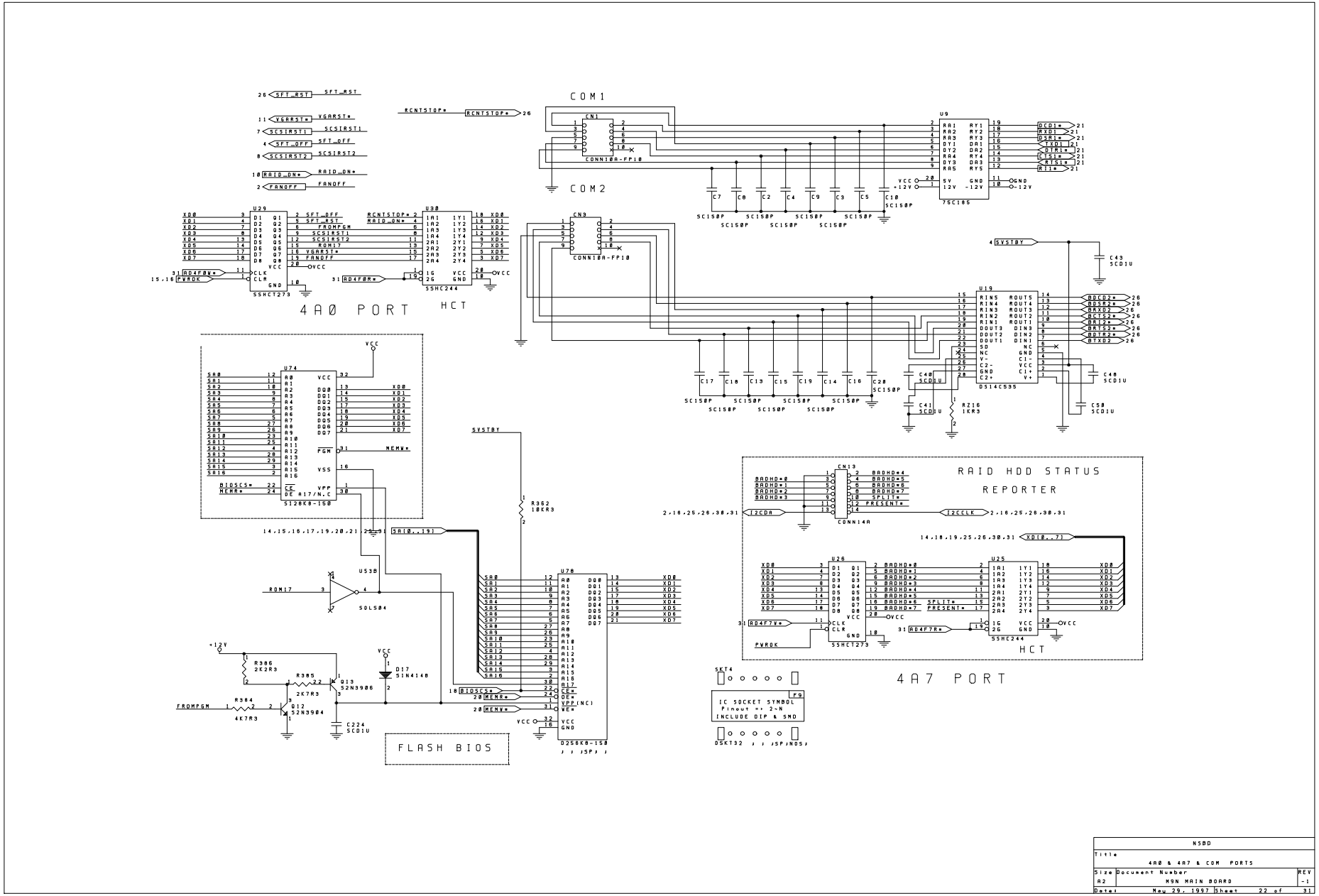
COM1
COM2
CN1
CONN10A-FP10
U9
75C185
CN3
CONN10A-FP10
U19
DS14C535
U29
SSHCT273
U30
SSHC244
4A0 PORT
HCT
U74
S128K8-150
U78
D256K8-150
FLASH BIOS
RAID HDD STATUS
REPORTER
CN13
CONN14A
U26
SSHCT273
U25
SSHC244
4A7 PORT
HCT
IC SOCKET SYMBOL
Pinout => 2-N
INCLUDE DIP & SMD
DSKT32 ; ; ;SP;NOS;
NSBD
Title
4A0 & 4A7 & COM PORTS
Size
A2
Document Number
M9N MAIN BOARD
REV
-1
Date:
May 29, 1997
Sheet
22 of
31

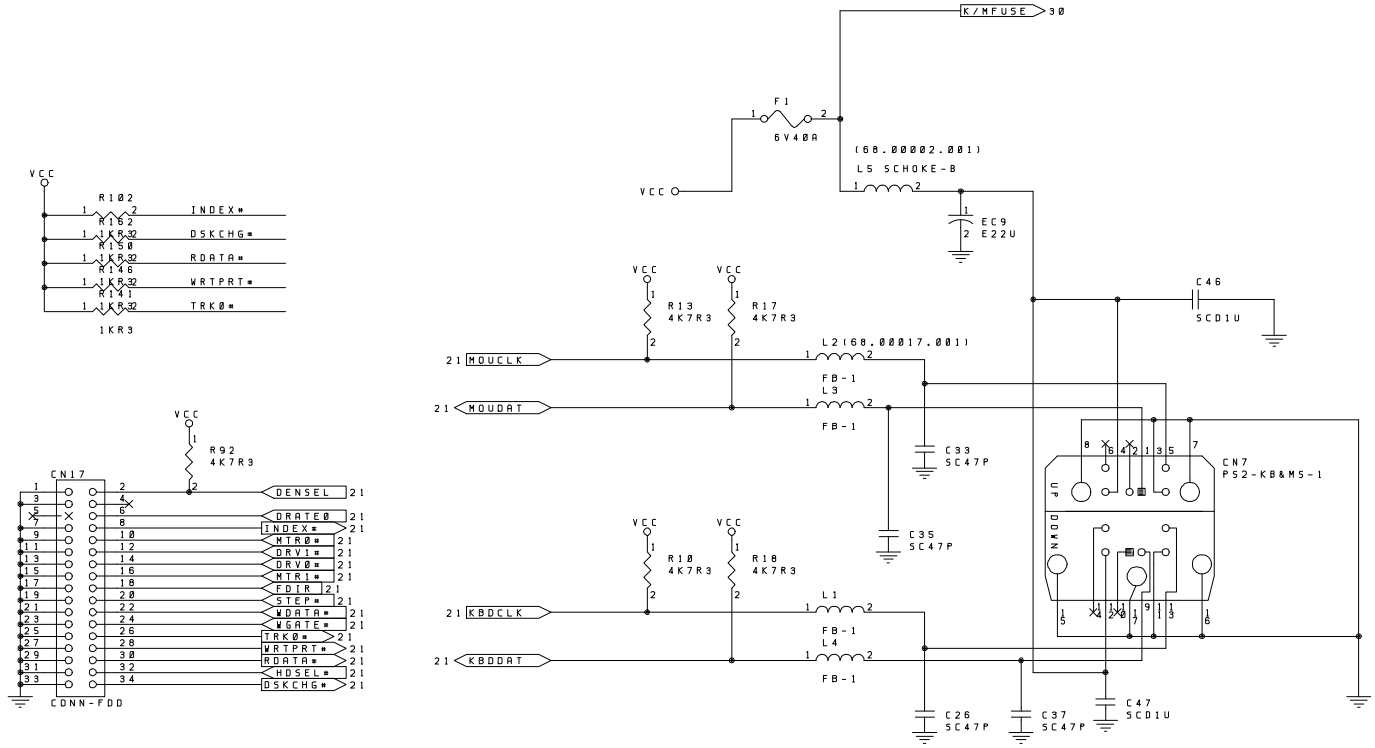

N5BD		
Title: CONNECTORS		
Size: A3	Document Number: M9N MAIN BOARD	REV: -1
Date: May 29, 1997	Sheet 23 of 31	

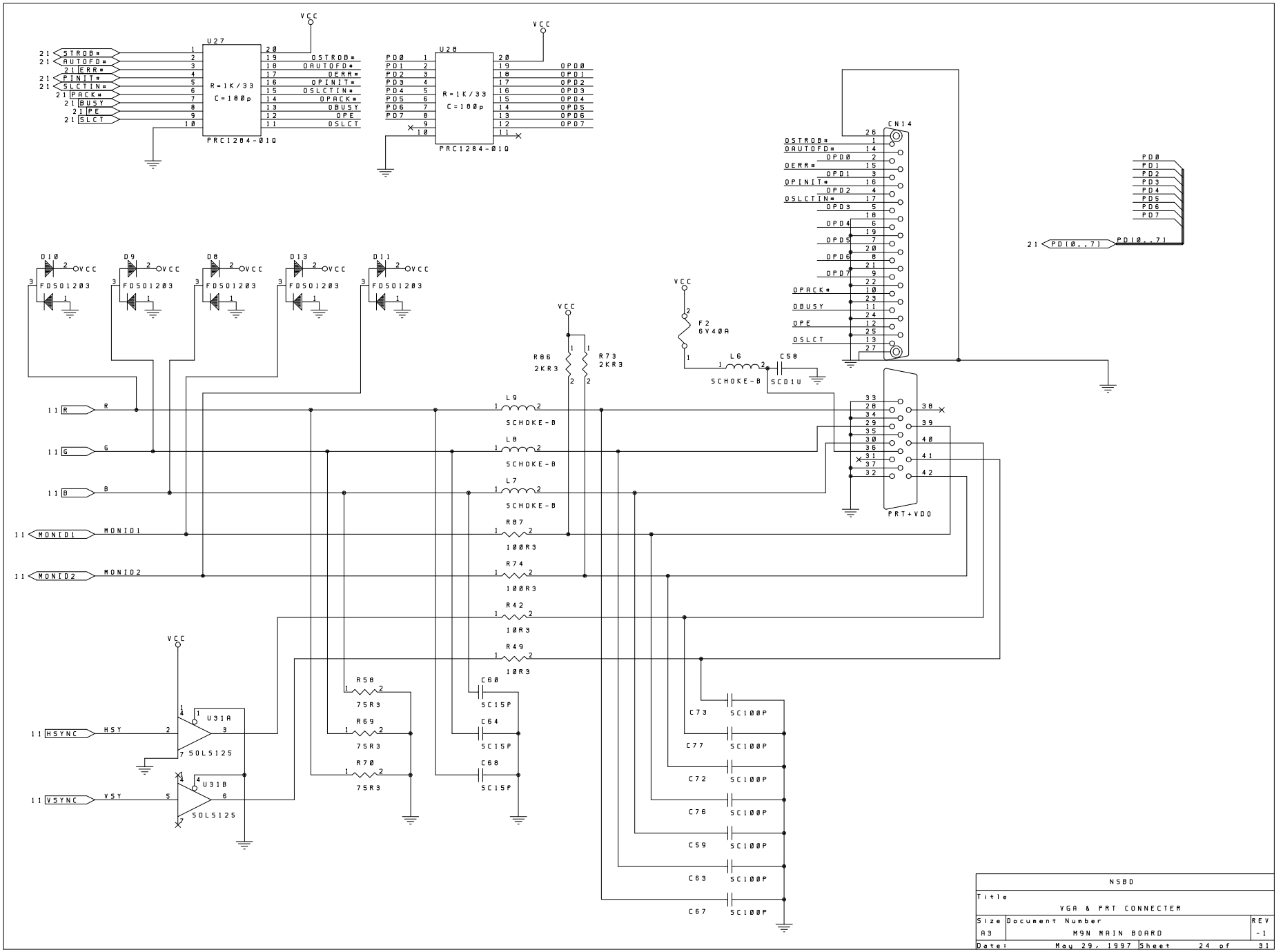

N580		
Title: VGA & PRT CONNECTER		
Size: A3	Document Number: M9N MAIN BOARD	REV: -1
Date: May 29, 1997	Sheet 24 of 31	

u

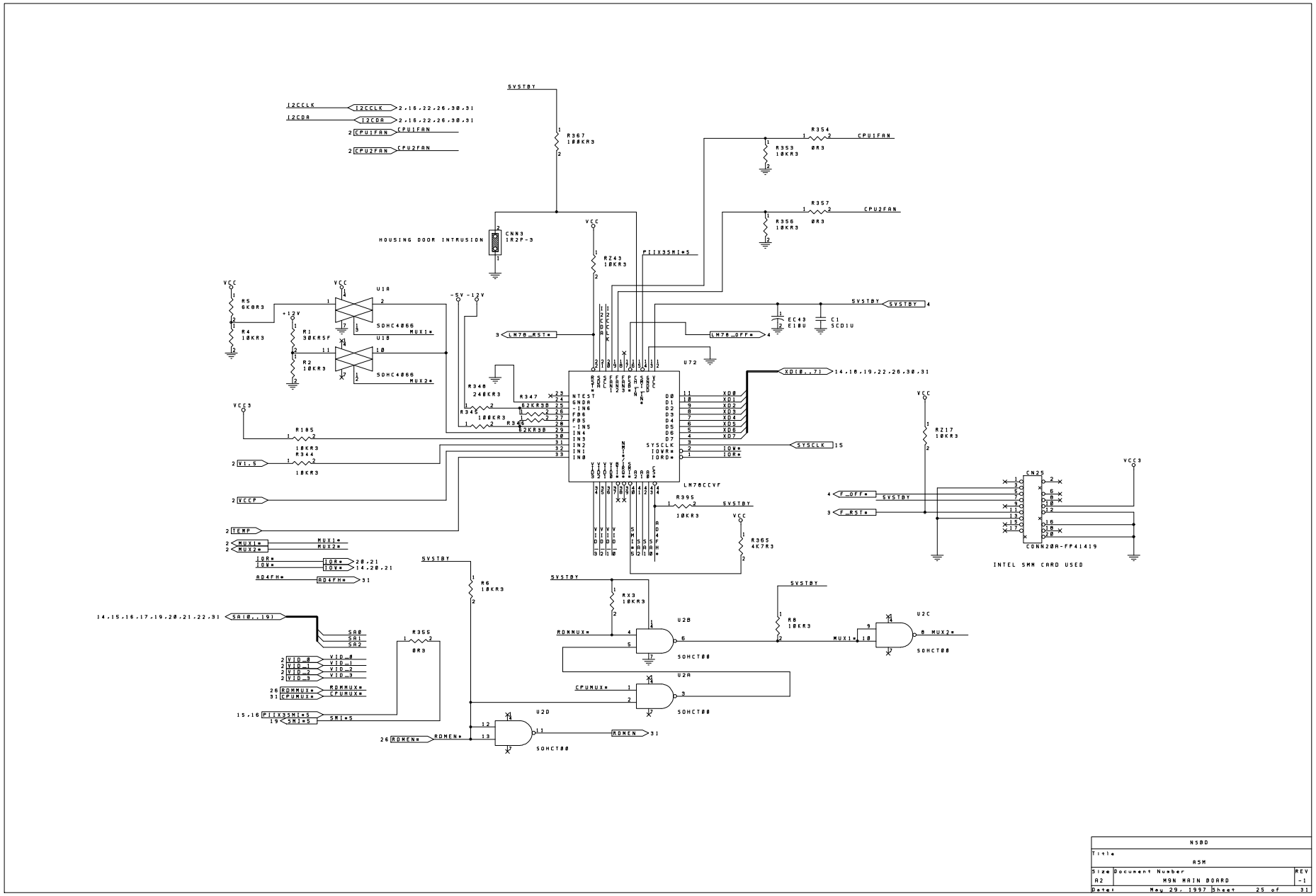
I2CCLK
I2CDA
CPU1FAN
CPU2FAN
HOUSING DOOR INTRUSION
CNN3
1R2P-3
R367
100KR3
R354
R353
10KR3
0R3
R357
R356
RZ43
10KR3
PIIX3SMI#S
U1A
U1B
5HC4066
MUX1#
MUX2#
R5
6K8R3
R4
10KR3
R1
30KR5F
R2
10KR3
-5V -12V
LM78_RST#
LM78_OFF#
EC43
E10U
C1
SCD1U
SYSTBY
U72
LM78CCVF
XD[0..7]
SYSCLK
IOW#
IOR#
R348
240KR3
R347
62KR3B
R345
100KR3
R346
62KR3B
R185
18KR3
R344
18KR3
VCCP
TEMP
MUX1#
MUX2#
IOR#
IOW#
AD4FH#
R395
10KR3
R365
4K7R3
RZ17
10KR3
CN25
CONN20A-FP41419
F_OFF#
F_RST#
INTEL SMM CARD USED
R6
10KR3
RX3
10KR3
R8
10KR3
U2B
U2C
U2A
U2D
5QHCT08
RDMMUX#
CPUMUX#
RDMEN#
SA[0..19]
SA0
SA1
SA2
VID_0
VID_1
VID_2
VID_3
R355
0R3
SMI#S
N500
ASM
M9N MAIN BOARD
May 29, 1997
25 of 31

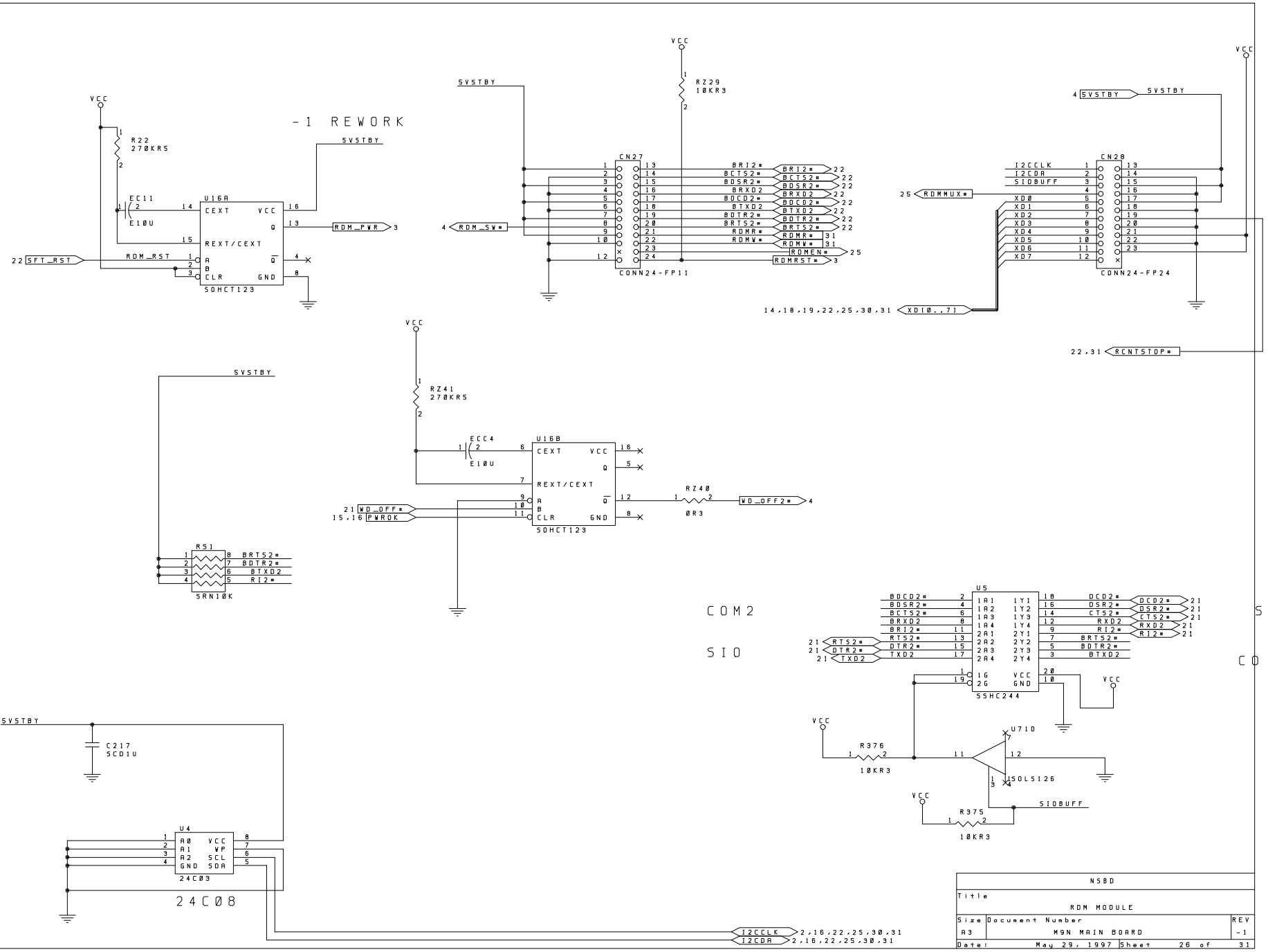
-1 REWORK
VCC
R22
270KR5
EC11
E10U
U16A
CEXT
VCC
REXT/CEXT
Q
CLR
GND
SOHCT123
SVSTBY
RDM_PWR
RDM_RST
SFT_RST
CN27
CONN24-FP11
BRI2*
BCTS2*
BDSR2*
BRXD2
BDCD2*
BTXD2
BDTR2*
BRTS2*
RDMR*
RDMW*
RDMEN*
RDMRST*
RDM_SW*
RZ29
10KR3
CN28
CONN24-FP24
I2CCLK
I2CDA
SIOBUFF
RDMMUX*
XD0
XD1
XD2
XD3
XD4
XD5
XD6
XD7
XD[0..7]
RCNTSTOP*
RZ41
270KR5
ECC4
U16B
RZ40
0R3
WD_OFF2*
WD_OFF*
PWROK
RS1
SRN10K
BRT52*
BDTR2*
BTXD2
RI2*
COM2
SIO
U5
SSHC244
BDCD2*
BDSR2*
BCTS2*
BRXD2
BRI2*
RTS2*
DTR2*
TXD2
DCD2*
DSR2*
CTS2*
RXD2
RI2*
BRT52*
BDTR2*
BTXD2
U71D
R376
10KR3
SOLS126
R375
10KR3
C217
5CD1U
U4
24C03
24C08
NSBD
Title
RDM MODULE
Size
A3
Document Number
M9N MAIN BOARD
REV
-1
Date: May 29, 1997 Sheet 26 of 31

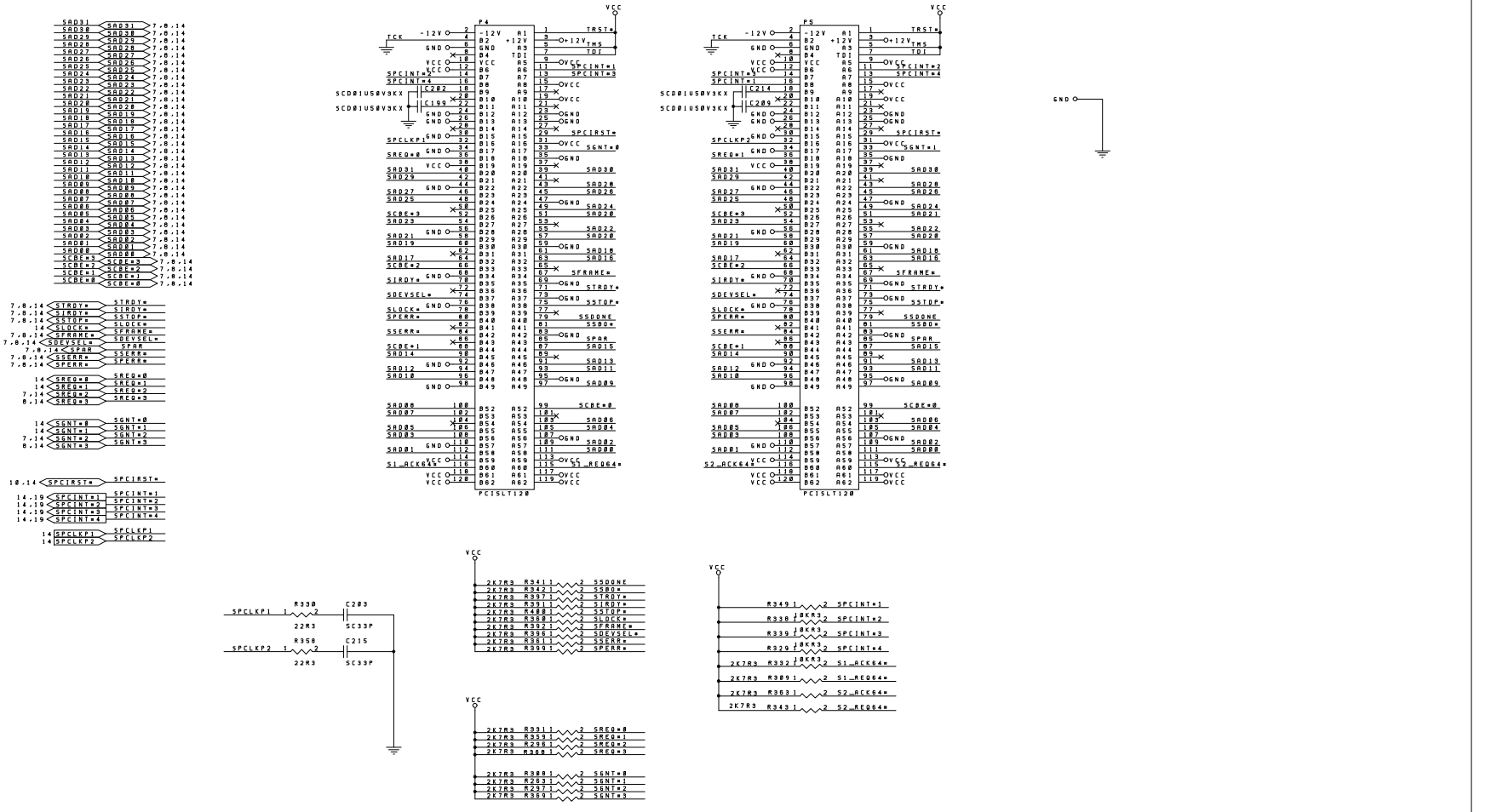

N5DD		
Title	SECONDARY PCI SLOTS	
Size A2	Document Number M9N MAIN BOARD	REV -1
Date: May 29, 1997	Sheet 27 of 31	

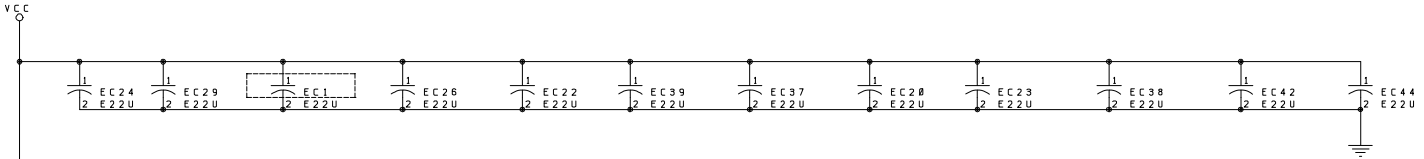

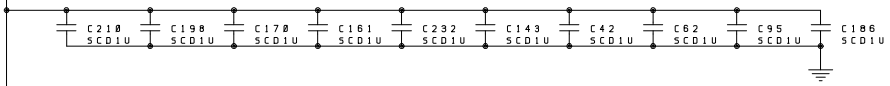

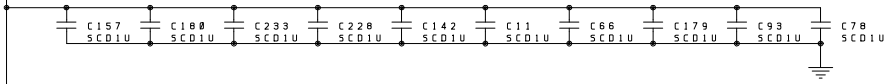

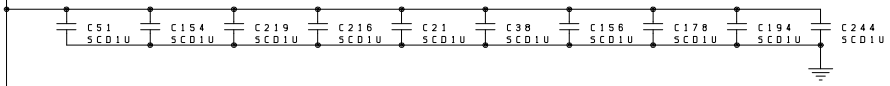

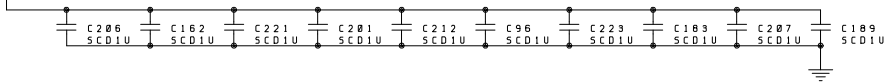

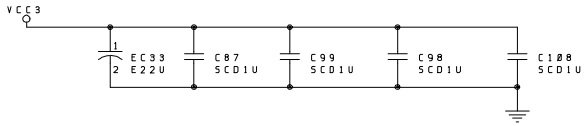

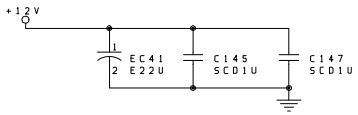

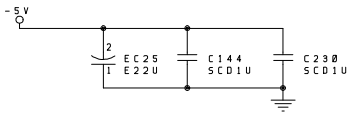

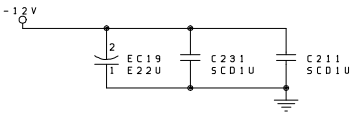

N58D		
Title: DECOUPLING CAP.		
Size: A3	Document Number: M9N MAIN BOARD	REV: -1
Date: May 29, 1997	Sheet 28 of 31	

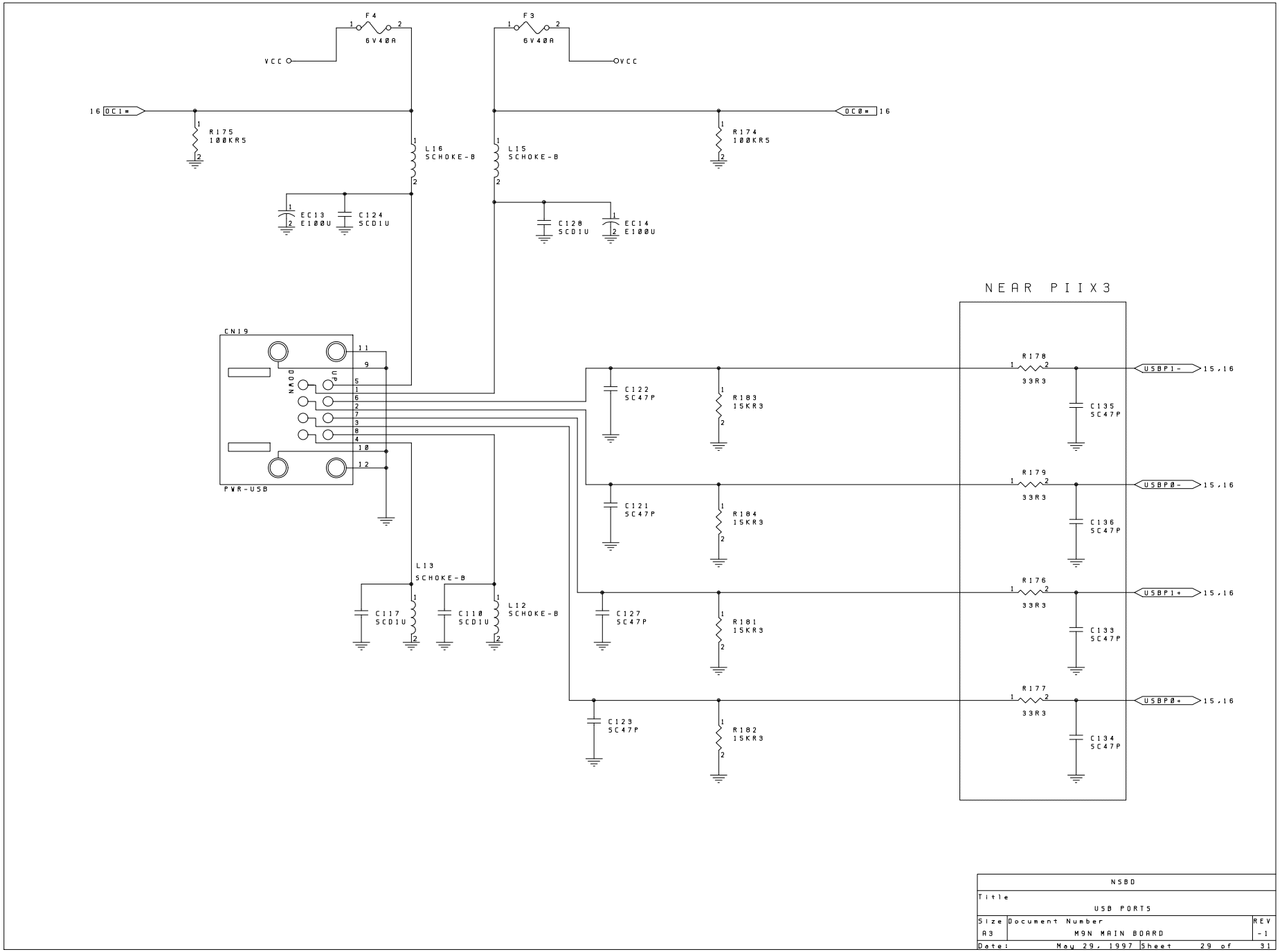

N580		
Title: USB PORTS		
Size: A3	Document Number: M9N MAIN BOARD	REV: -1
Date: May 29, 1997	Sheet 29 of 31	

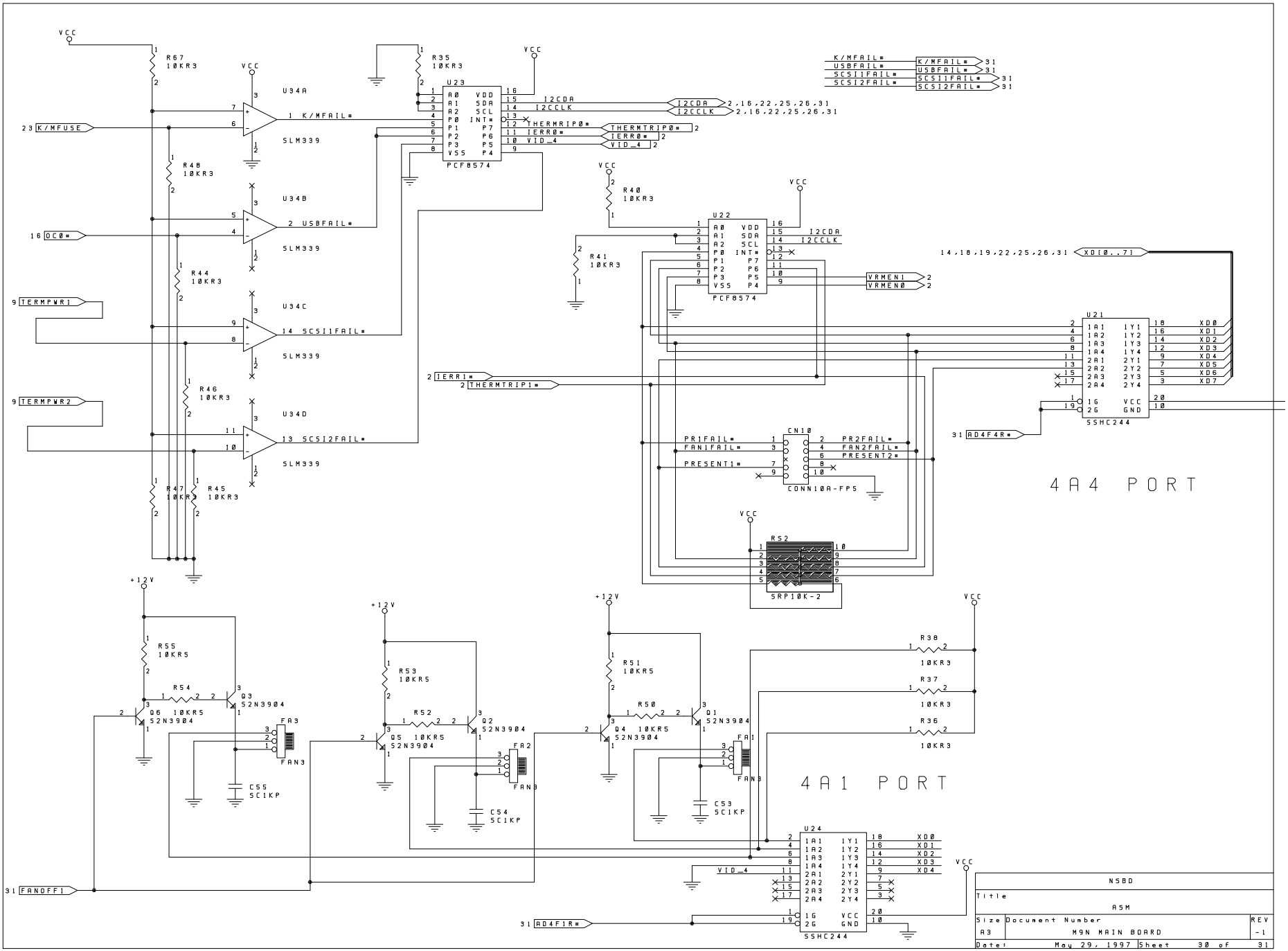

VCC
R67 10KR3
U34A
SLM339
K/MFAIL#
K/MFUSE
R48 10KR3
U34B
USBFAIL#
OC0#
R44 10KR3
U34C
SCSI1FAIL#
TERMPWR1
R46 10KR3
U34D
SCSI2FAIL#
TERMPWR2
R47 10KR3
R45 10KR3
R35 10KR3
U23
PCF8574
I2CDA
I2CCLK
THERMRIP0#
IERR0#
VID_4
THERMTRIP0#
R40 10KR3
U22
R41 10KR3
VRMEN1
VRMEN0
XD[0..7]
U21
SSHC244
IERR1#
THERMTRIP1#
AD4F4R#
CN10
CONN10A-FP5
PR1FAIL#
FAN1FAIL#
PRESENT1#
PR2FAIL#
FAN2FAIL#
PRESENT2#
RS2
SRP10K-2
4A4 PORT
+12V
R55 10KR5
R54 10KR5
Q6 S2N3904
Q3 S2N3904
FA3
FAN3
C55 SC1KP
R53 10KR5
R52 10KR5
Q5 S2N3904
Q2 S2N3904
FA2
C54 SC1KP
R51 10KR5
R50 10KR5
Q4 S2N3904
Q1 S2N3904
FA1
C53 SC1KP
R38 10KR3
R37 10KR3
R36 10KR3
4A1 PORT
U24
FANOFF1
AD4F1R#
NSBD
Title
ASM
Size A3
Document Number M9N MAIN BOARD
REV -1
Date: May 29, 1997
Sheet 30 of 31

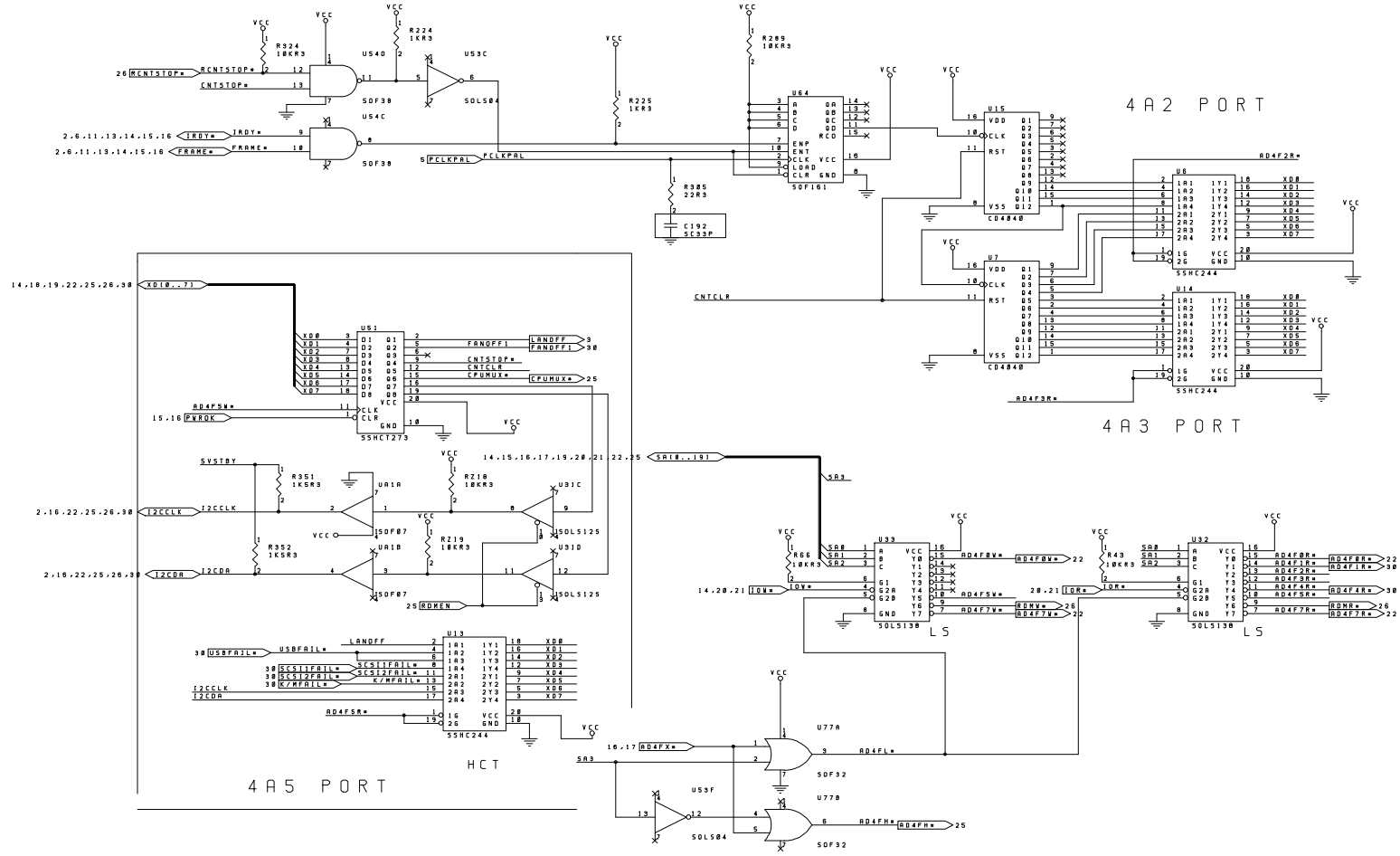

NSBD		
Title	ASM	
Size A2	Document Number M9N MAIN BOARD	REV -1
Date: May 29, 1997	Sheet 31 of 31	

M9N CPU BOARD -1

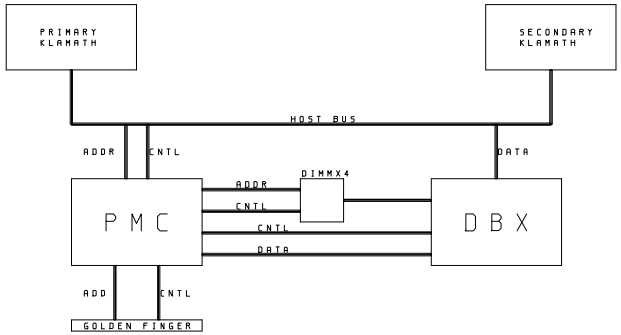

ILINK	CONTENTS
IM9N002.SCH	PRIMARY KLAMATH SLOT
IM9N003.SCH	SECONDARY KLAMATH SLOT
IM9N004.SCH	PMC
IM9N005.SCH	DBX
IM9N006.SCH	SIDE BAND SIGNALS
IM9N007.SCH	CLOCK GENERATOR
IM9N008.SCH	1.5V REQULATOR
IM9N09.SCH	PMC & DBX GTL-VREF 1.0V
IM9N010.SCH	ITP CONNECTOR
IM9N011.SCH	GOLDEN FINGER
IM9N012.SCH	DECOUPLING CAPS FOR PRIMARY CPU
IM9N013.SCH	DECOUPLING CAPS FOR SCEONDARY CPU
IM9N014.SCH	DIMM1, DIMM2
IM9N015.SCH	DIMM3, DIMM4
IM9N016.SCH	ON BOARD FOR PRIMARY KLAMATH
IM9N017.SCH	ON BOARD VRM FOR SECONDARY KLAMATH
IM9N018.SCH	MA BUFFER

09/09,1996

NSBD, Acer		
Title: CONTENTS		
Size: A3	Document Number: M9N CPU BOARD	REV: 5A
Date: June 24, 1997	Sheet 1 of 18	

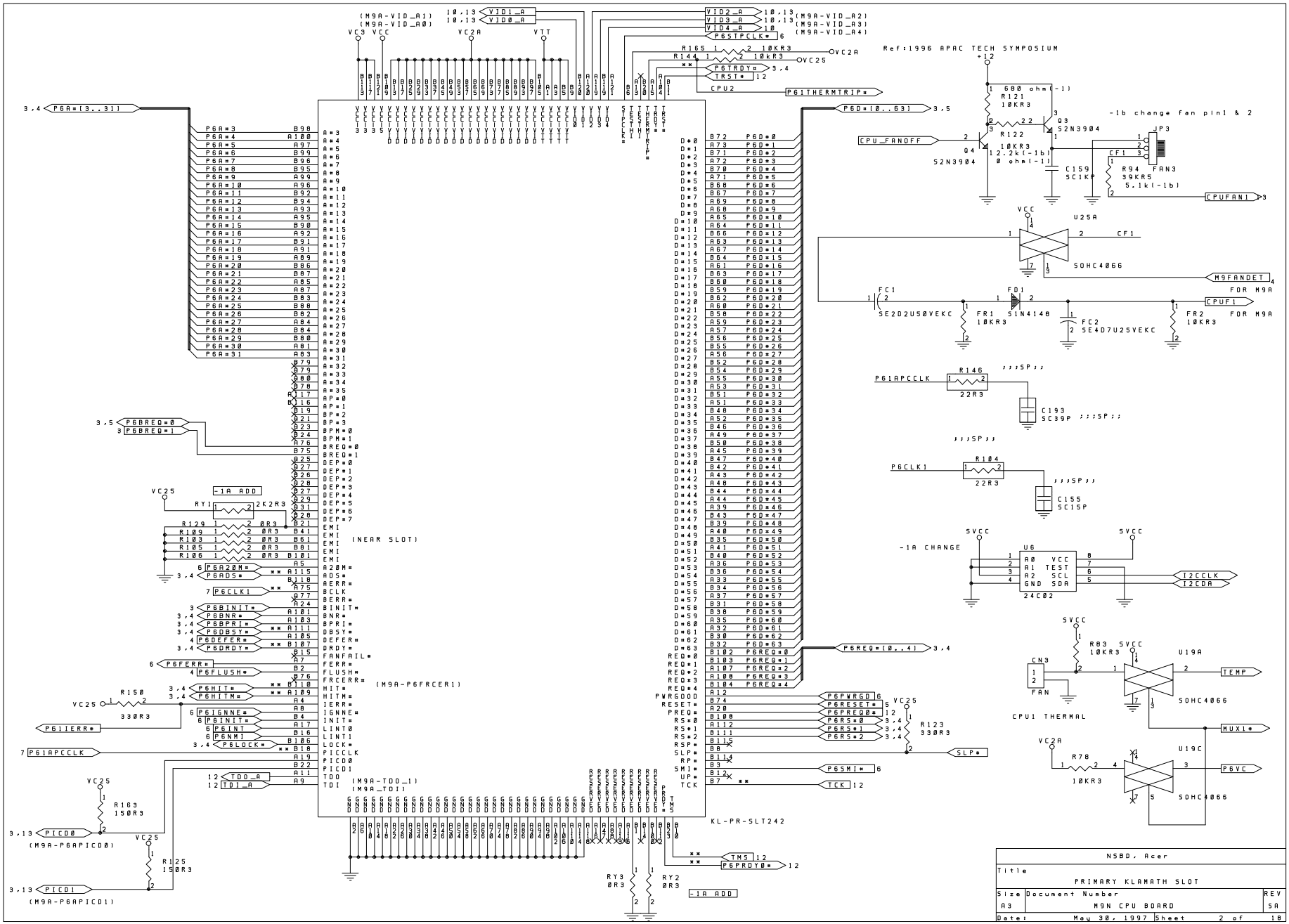
Ref:1996 APAC TECH SYMPOSIUM
-1b change fan pin1 & 2
-1A CHANGE
-1A ADD
(NEAR SLOT)
KL-PR-SLT242
CPU1 THERMAL
NSBD, Acer
PRIMARY KLAMATH SLOT
M9N CPU BOARD
May 30, 1997
Sheet 2 of 18

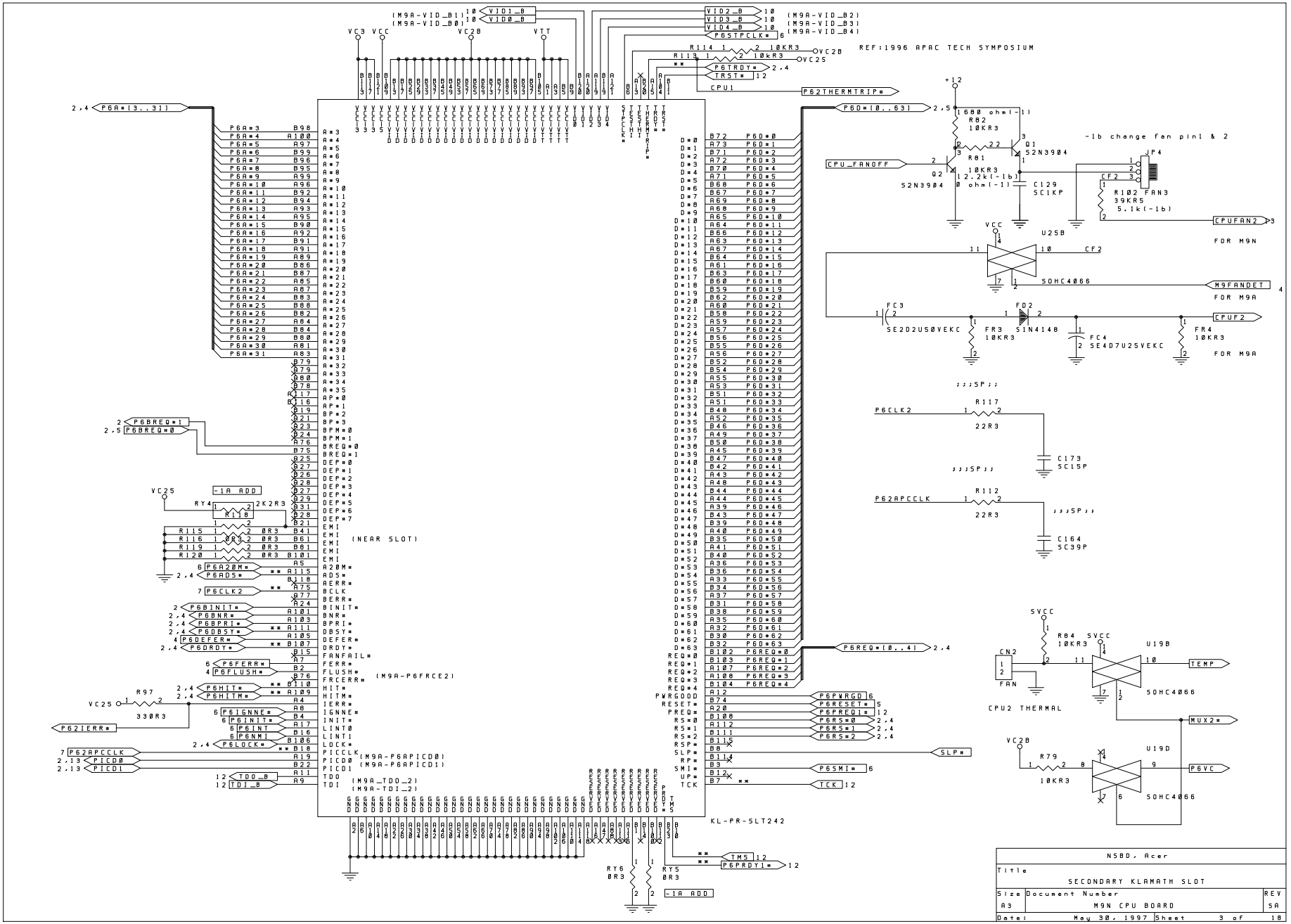
REF:1996 APAC TECH SYMPOSIUM
KL-PR-SLT242
(NEAR SLOT)
-1A ADD
-1b change fan pin1 & 2
CPU_FANOFF
CPUFAN2
FOR M9N
M9FANDET
FOR M9A
CPUF2
FOR M9A
CPU2 THERMAL
TEMP
MUX2=
P6VC
NSBD, Acer
Title
SECONDARY KLAMATH SLOT
Size
A3
Document Number
M9N CPU BOARD
REV
5A
Date: May 30, 1997
Sheet 3 of 18

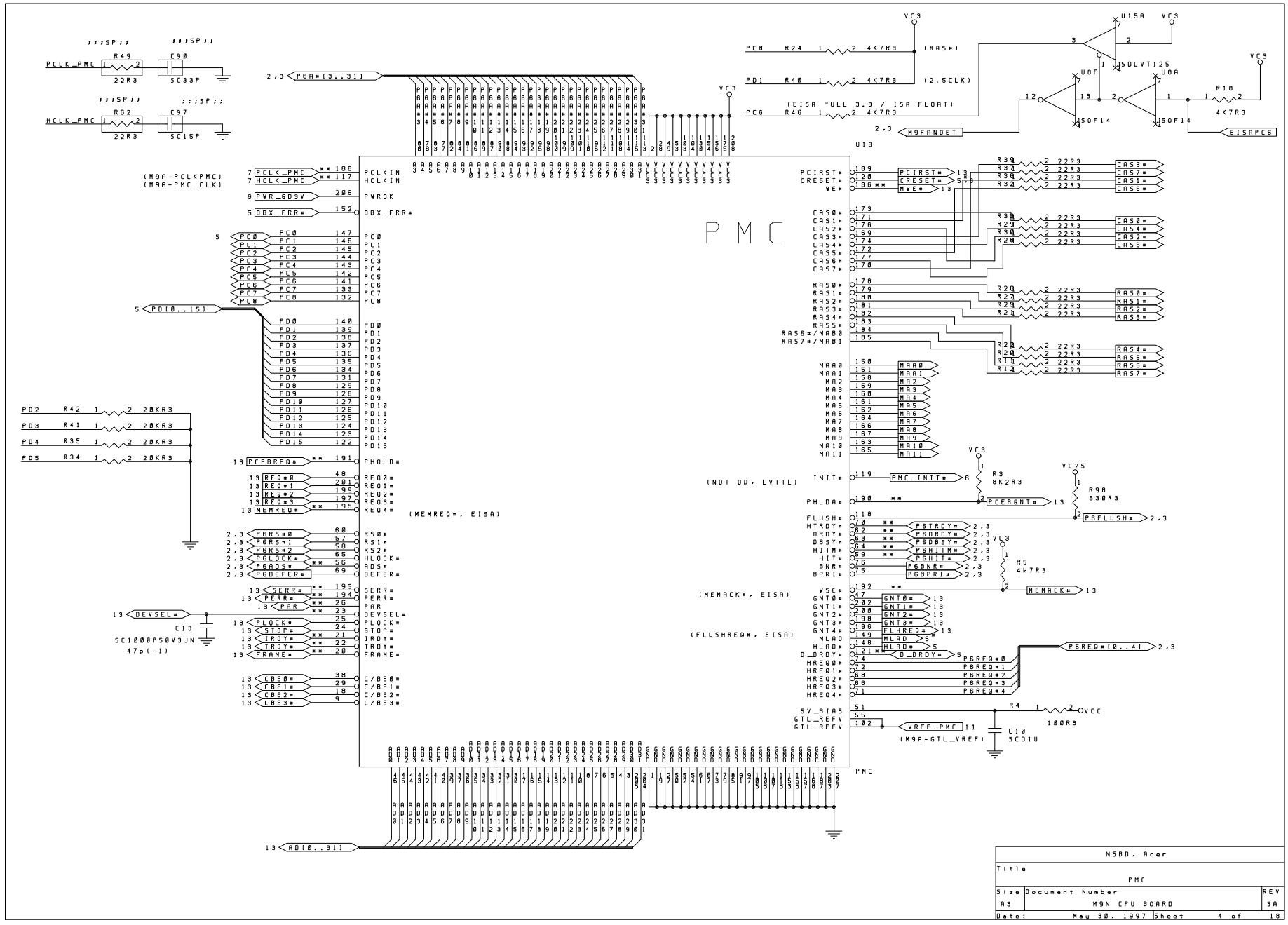
PMC
PCLK_PMC
HCLK_PMC
R49
R62
C90
C97
22R3
SC33P
SC15P
P6A#[3..31]
VC3
U15A
U8F
U8A
74LVT125
74LVTF14
PC8 R24 4K7R3 (RAS#)
PD1 R40 4K7R3 (2.5CLK)
(EISA PULL 3.3 / ISA FLOAT)
PC6 R46 4K7R3
M9FANDET
EISAPC6
R18
U13
(M9A-PCLKPMC)
(M9A-PMC_CLK)
PCLKIN
HCLKIN
PWROK
DBX_ERR#
PC0
PC1
PC2
PC3
PC4
PC5
PC6
PC7
PC8
PD[0..15]
PHOLD#
REQ0#
REQ1#
REQ2#
REQ3#
REQ4#
(MEMREQ#, EISA)
RS0#
RS1#
RS2#
HLOCK#
ADS#
DEFER#
SERR#
PERR#
PAR
DEVSEL#
PLOCK#
STOP#
IRDY#
TRDY#
FRAME#
C/BE0#
C/BE1#
C/BE2#
C/BE3#
C13
SC1000P50V3JN
47p(-1)
PD2 R42 20KR3
PD3 R41 20KR3
PD4 R35 20KR3
PD5 R34 20KR3
PCIRST#
CRESET#
WE#
CAS0#
CAS1#
CAS2#
CAS3#
CAS4#
CAS5#
CAS6#
CAS7#
RAS0#
RAS1#
RAS2#
RAS3#
RAS4#
RAS5#
RA56#/MAB0
RA57#/MAB1
MAA0
MAA1
MA2
MA3
MA4
MA5
MA6
MA7
MA8
MA9
MA10
MA11
INIT#
(NOT OD, LVTTL)
PHLDA#
FLUSH#
HTRDY#
DRDY#
DBSY#
HITM#
HIT#
BNR#
BPRI#
(MEMACK#, EISA)
WSC#
GNT0#
GNT1#
GNT2#
GNT3#
GNT4#
MLAD
HLAD#
D_DRDY#
(FLUSHREQ#, EISA)
HREQ0#
HREQ1#
HREQ2#
HREQ3#
HREQ4#
5V_BIAS
GTL_REFV
GTL_REFV
R3 8K2R3
R98 330R3
R5 4k7R3
R4 100R3
C10 SCD1U
VREF_PMC
(M9A-GTL_VREF)
VCC
VC25
AD[0..31]
PMC
NSBD, Acer
Title
PMC
Size A3
Document Number M9N CPU BOARD
REV 5A
Date: May 30, 1997 Sheet 4 of 18

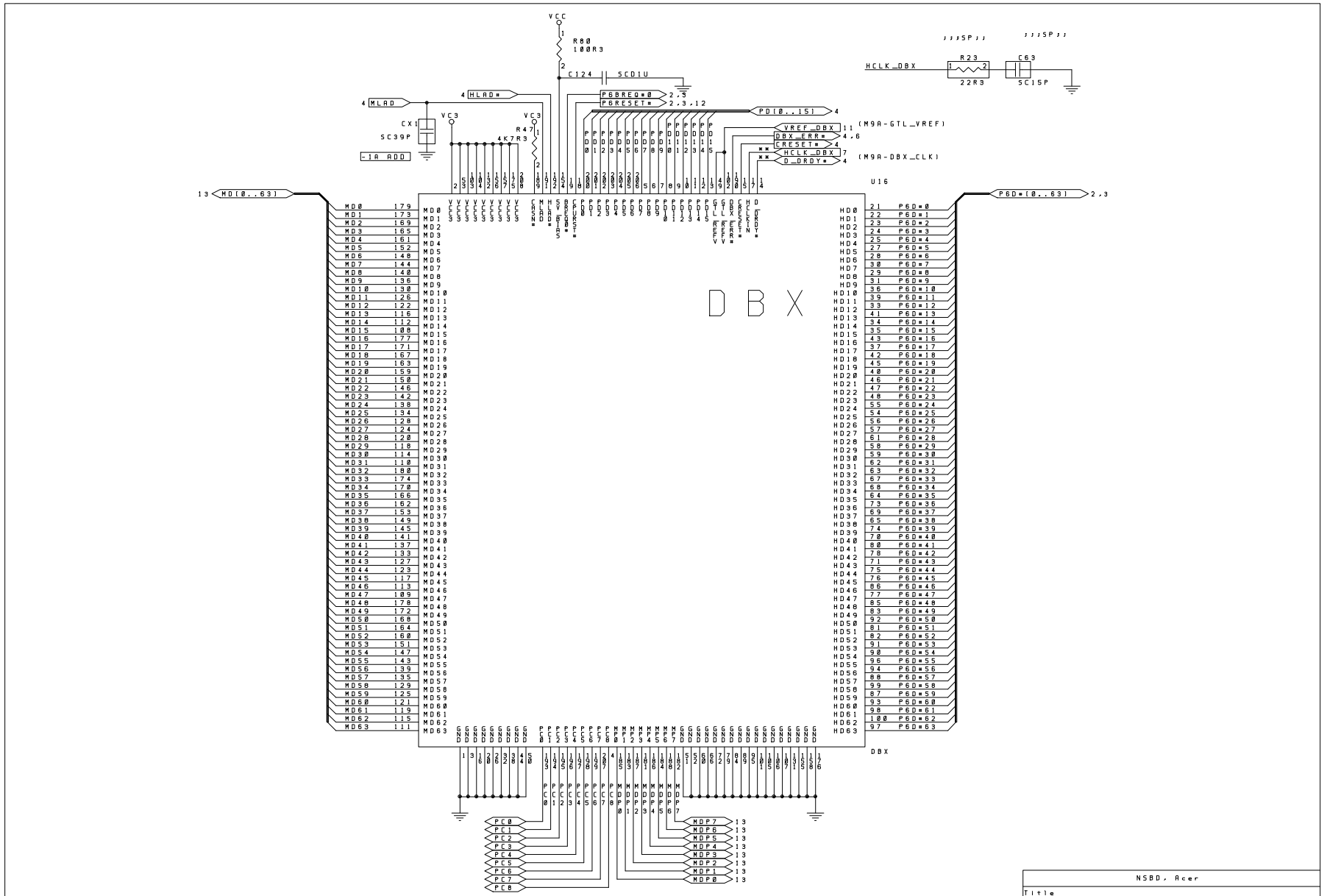

NSBD, Acer		
Title: DBX		
Size: A3	Document Number: M9N CPU BOARD	REV: 5A
Date: May 30, 1997	Sheet 5 of 18	

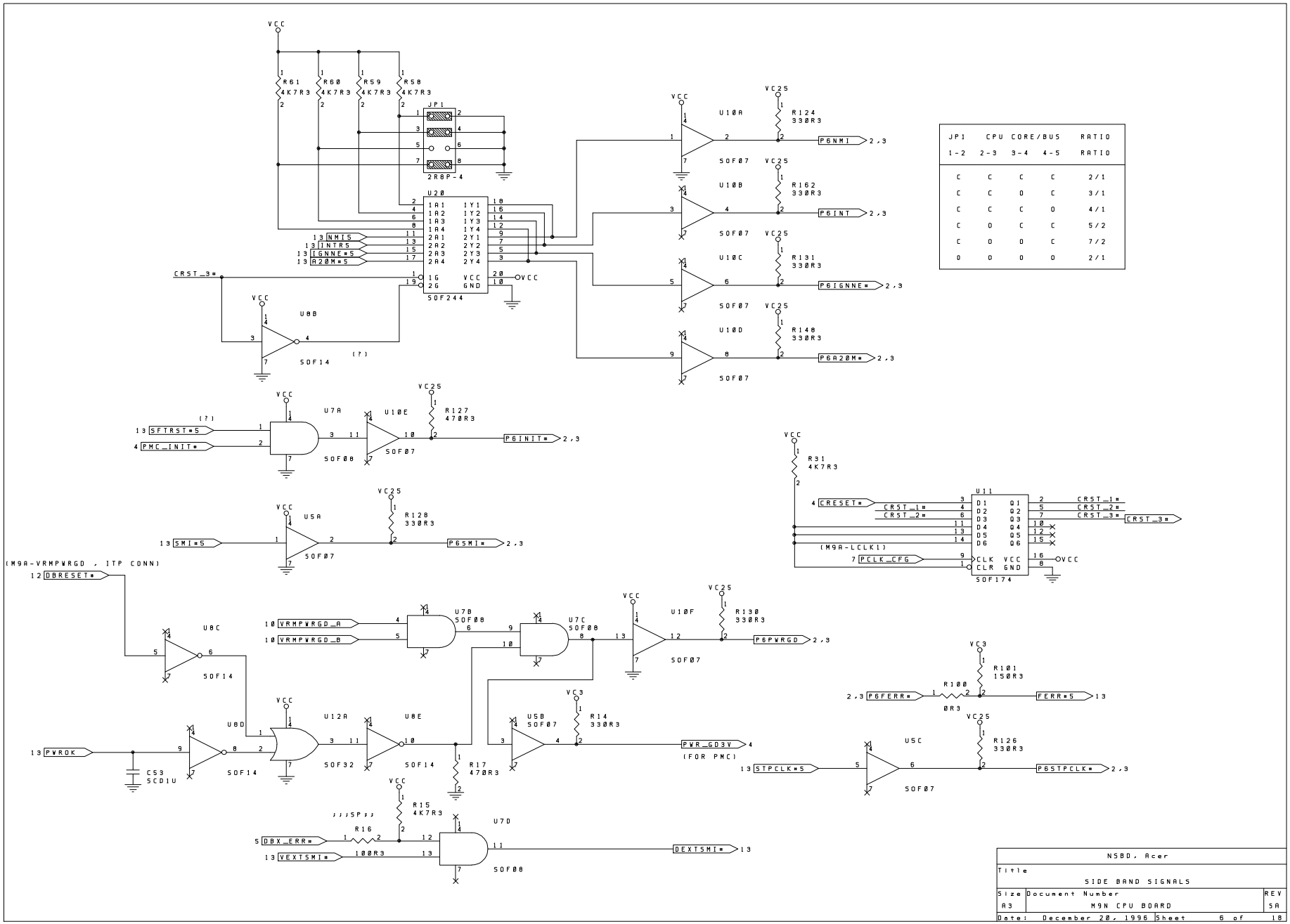
JP1 CPU CORE/BUS RATIO
1-2 2-3 3-4 4-5 RATIO
C C C C 2/1
C C O C 3/1
C C C O 4/1
C O C C 5/2
C O O C 7/2
O O O O 2/1
R61 4K7R3
R60 4K7R3
R59 4K7R3
R58 4K7R3
2R8P-4
U20
74F244
U10A
U10B
U10C
U10D
74F07
R124 330R3
R162 330R3
R131 330R3
R148 330R3
P6NMI
P6INT
P6IGNNE#
P6A20M#
NMI#5
INTR5
IGNNE#5
A20M#5
CRST_3#
U8B
74F14
U7A
74F08
U10E
R127 470R3
P6INIT#
SFTRST#5
PMC_INIT#
U5A
R128 330R3
P6SMI#
SMI#5
R31 4K7R3
U11
74F174
CRESET#
CRST_1#
CRST_2#
CRST_3#
PCLK_CFG
U8C
U7B 74F08
U7C 74F08
U10F
R130 330R3
P6PWRGD
VRMPWRGD_A
VRMPWRGD_B
DBRESET#
U8D
U12A
74F32
U8E
U5B 74F07
R14 330R3
PWR_GD3V
(FOR PMC)
PWROK
C53 5CD1U
R17 470R3
R15 4K7R3
R16 100R3
U7D
74F08
DBX_ERR#
VEXTSMI#
DEXTSMI#
R100 0R3
R101 150R3
P6FERR#
FERR#5
U5C
R126 330R3
P6STPCLK#
STPCLK#5
NSBD, Acer
SIDE BAND SIGNALS
M9N CPU BOARD
Size A3
Document Number
REV 5A
Date: December 20, 1996
Sheet 6 of 18

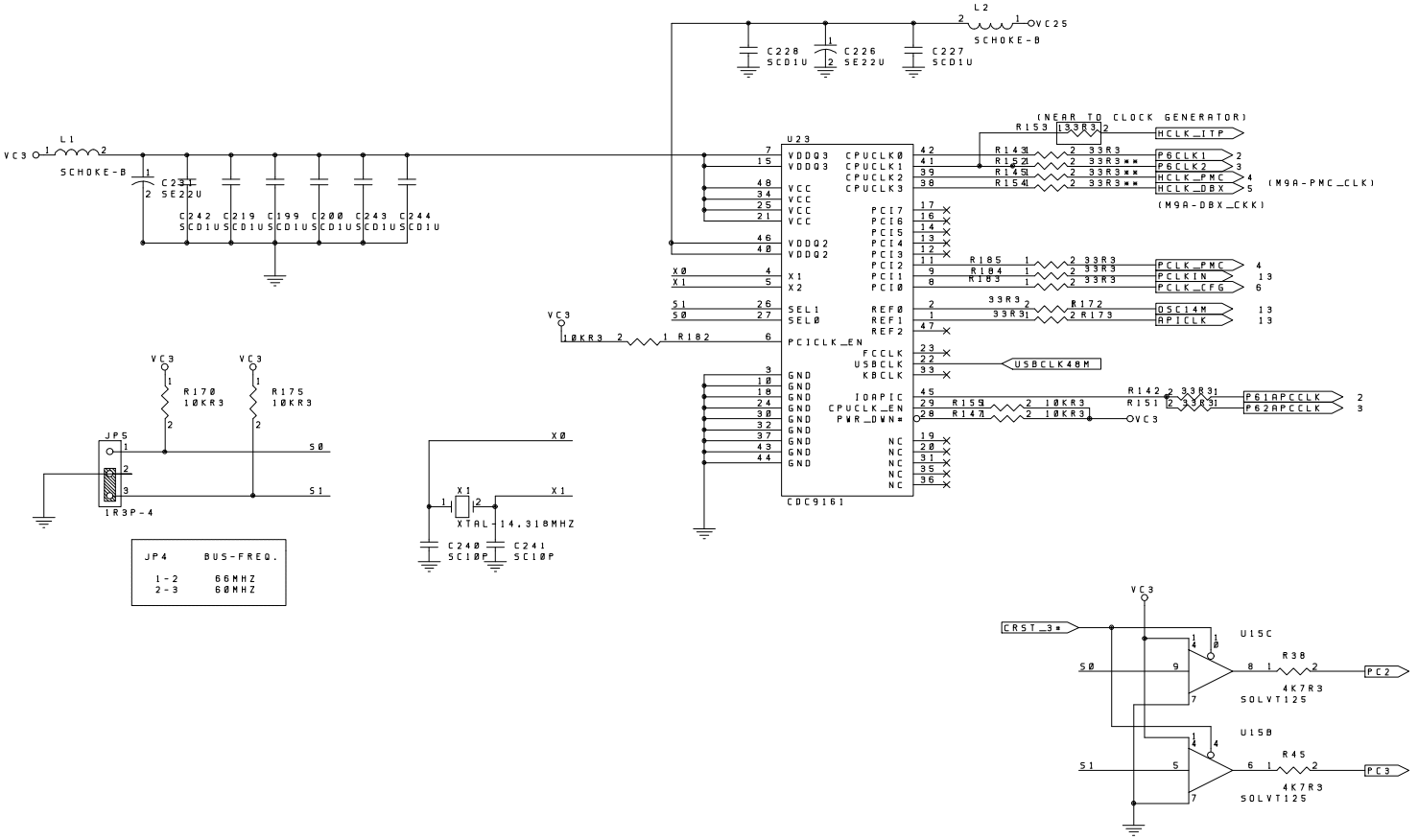

NSBD, Acer		
Title: CLOCK GENERATOR		
Size: A3	Document Number: M9N CPU BOARD	REV: 5A
Date: May 30, 1997	Sheet 7 of 18	

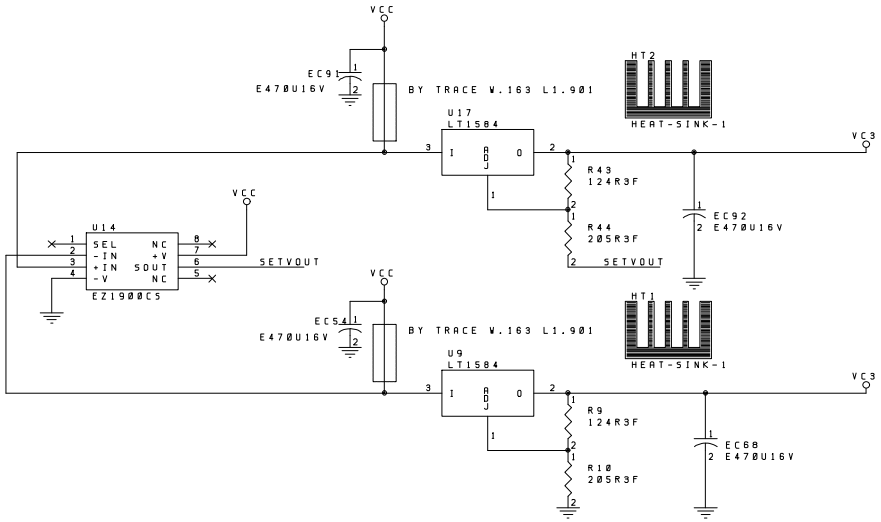

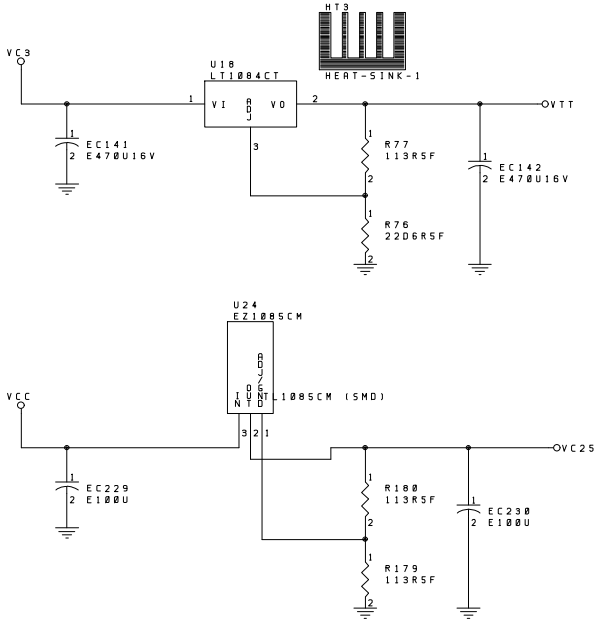

N58D, Acer		
Title: 1.5V REGULATOR		
Size: A3	Document Number: KLAMATH CPU BOARD for M9A M.B.	REV: 5A
Date: December 20, 1996	Sheet 8 of 18	

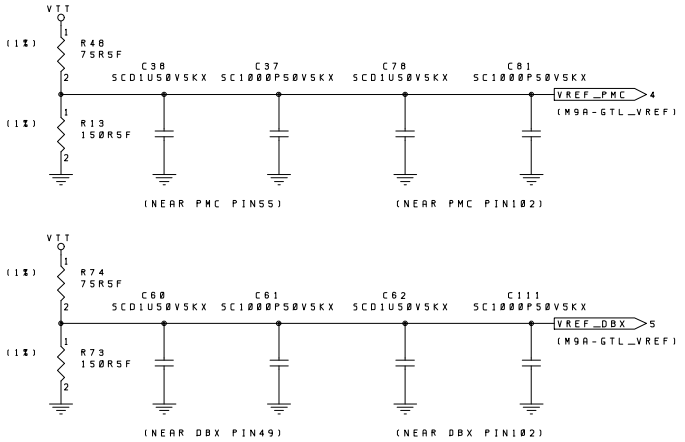

NSBD, Acer		
Title: TERM & GTL-VREF 1.0V		
Size: A3	Document Number: M9N CPU BOARD	REV: 5A
Date: October 16, 1996	Sheet 9 of 18	

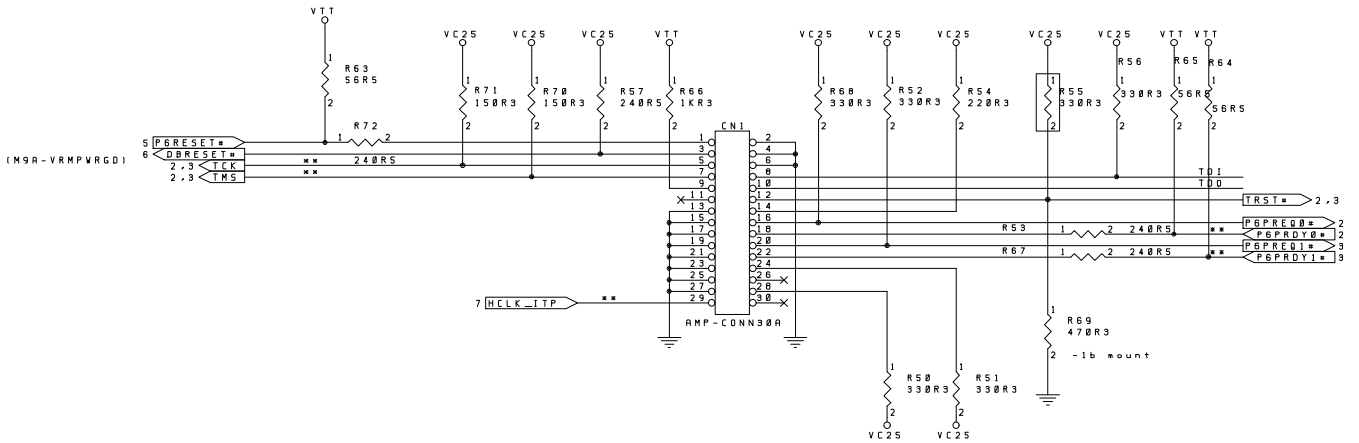

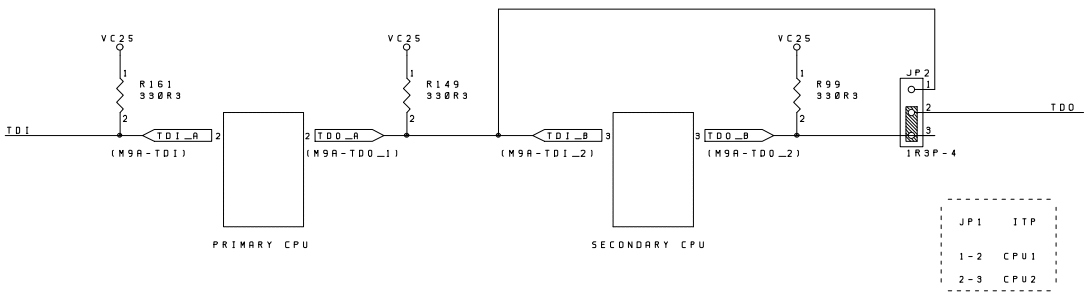

	N5BD, Acer	
Title	ITP CONNECTOR	
Size A3	Document Number M9N CPU BOARD	REV 5A
Date: March 24, 1997	Sheet 10 of 18	

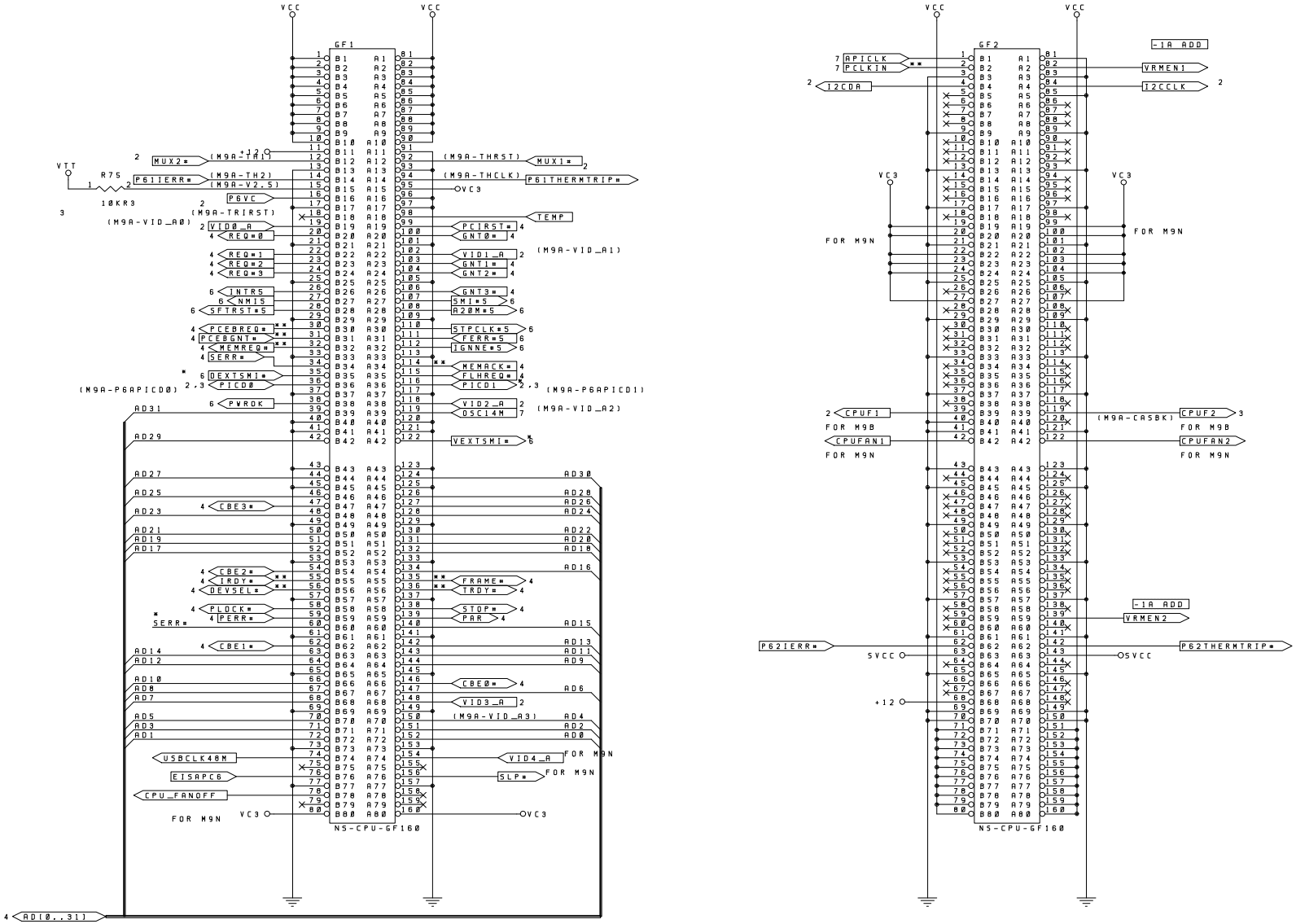

NSBD, Acer		
Title: GOLDEN FINGER		
Size: A3	Document Number: KLAMATH CPU BOARD for M9A M.B.	REV: 5A
Date: February 19, 1997	Sheet 11 of 18	

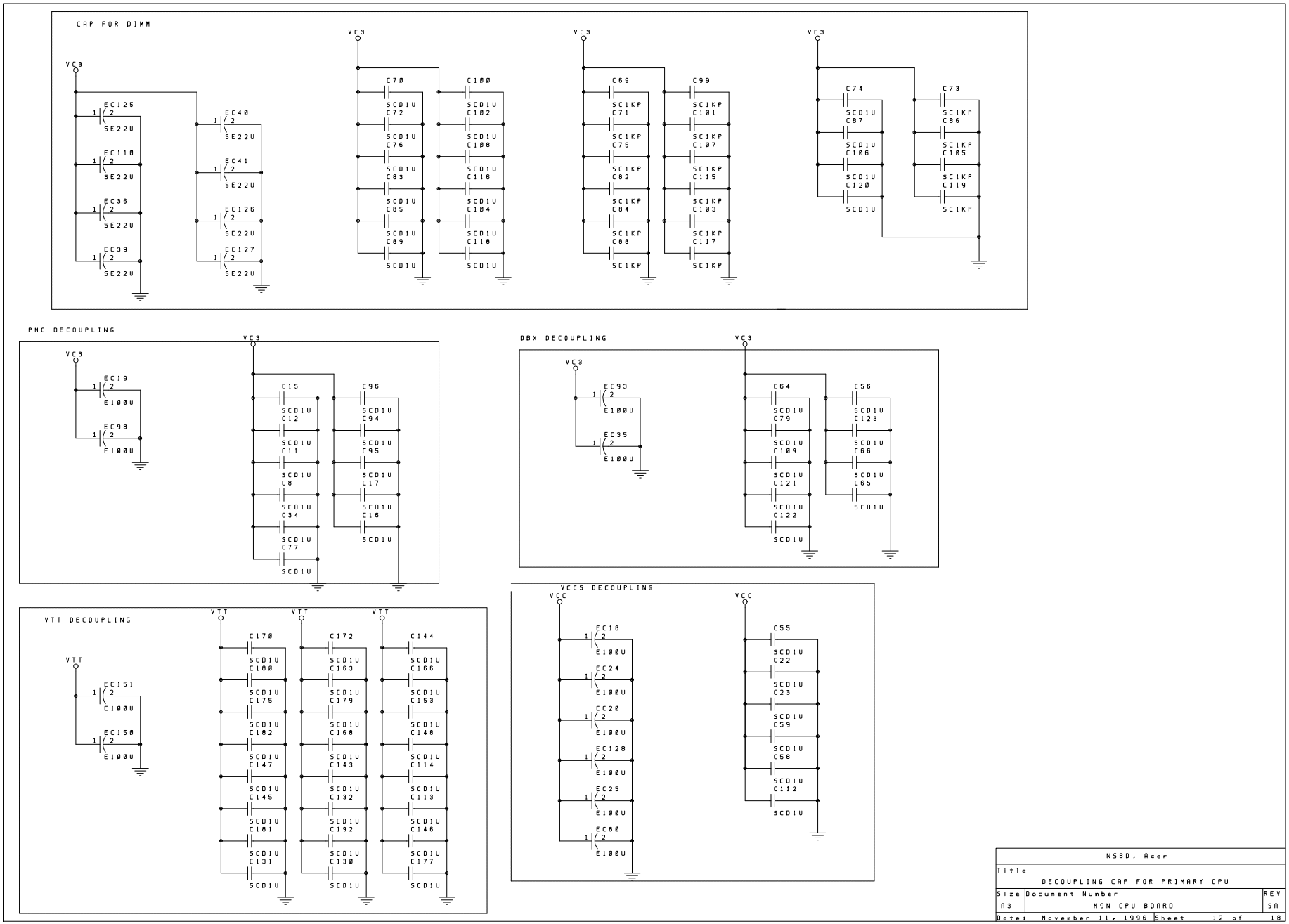
CAP FOR DIMM
VC3
EC125
EC40
EC110
EC41
EC36
EC126
EC39
EC127
SE22U
C70
C100
C72
C102
C76
C108
C83
C116
C85
C104
C89
C110
SCD1U
C69
C99
C71
C101
C75
C107
C82
C115
C84
C103
C88
C117
SC1KP
C74
C73
C87
C86
C106
C105
C120
C119
PMC DECOUPLING
EC19
EC98
E100U
C15
C96
C12
C94
C11
C95
C8
C17
C34
C16
C77
DBX DECOUPLING
EC93
EC35
C64
C56
C79
C123
C109
C66
C121
C65
C122
VTT DECOUPLING
VTT
EC151
EC150
C170
C172
C144
C180
C163
C166
C175
C179
C153
C182
C168
C148
C147
C143
C114
C145
C132
C113
C181
C192
C146
C131
C130
C177
VCC5 DECOUPLING
VCC
EC18
EC24
EC20
EC128
EC25
EC80
C55
C22
C23
C59
C58
C112
NSBD, Acer
Title
DECOUPLING CAP FOR PRIMARY CPU
Size
A3
Document Number
M9N CPU BOARD
REV
5A
Date: November 11, 1996
Sheet 12 of 18

VCC2A -> VCC3

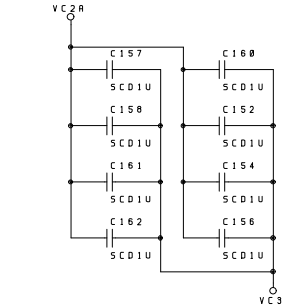

VCC2B -> VCC3

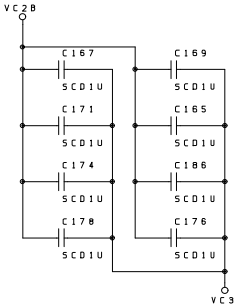

VCC3 -> VCC

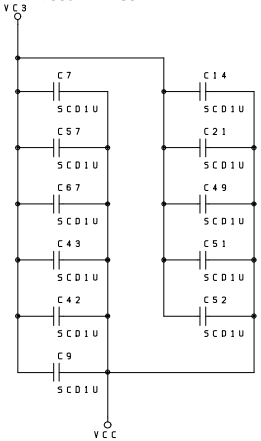

NSBD, Acer		
Title: DECOUPLING CAPS FOR SECONDARY CPU		
Size: A3	Document Number: M9N CPU BOARD	REV: 5A
Date: November 21, 1996	Sheet 13 of 18	

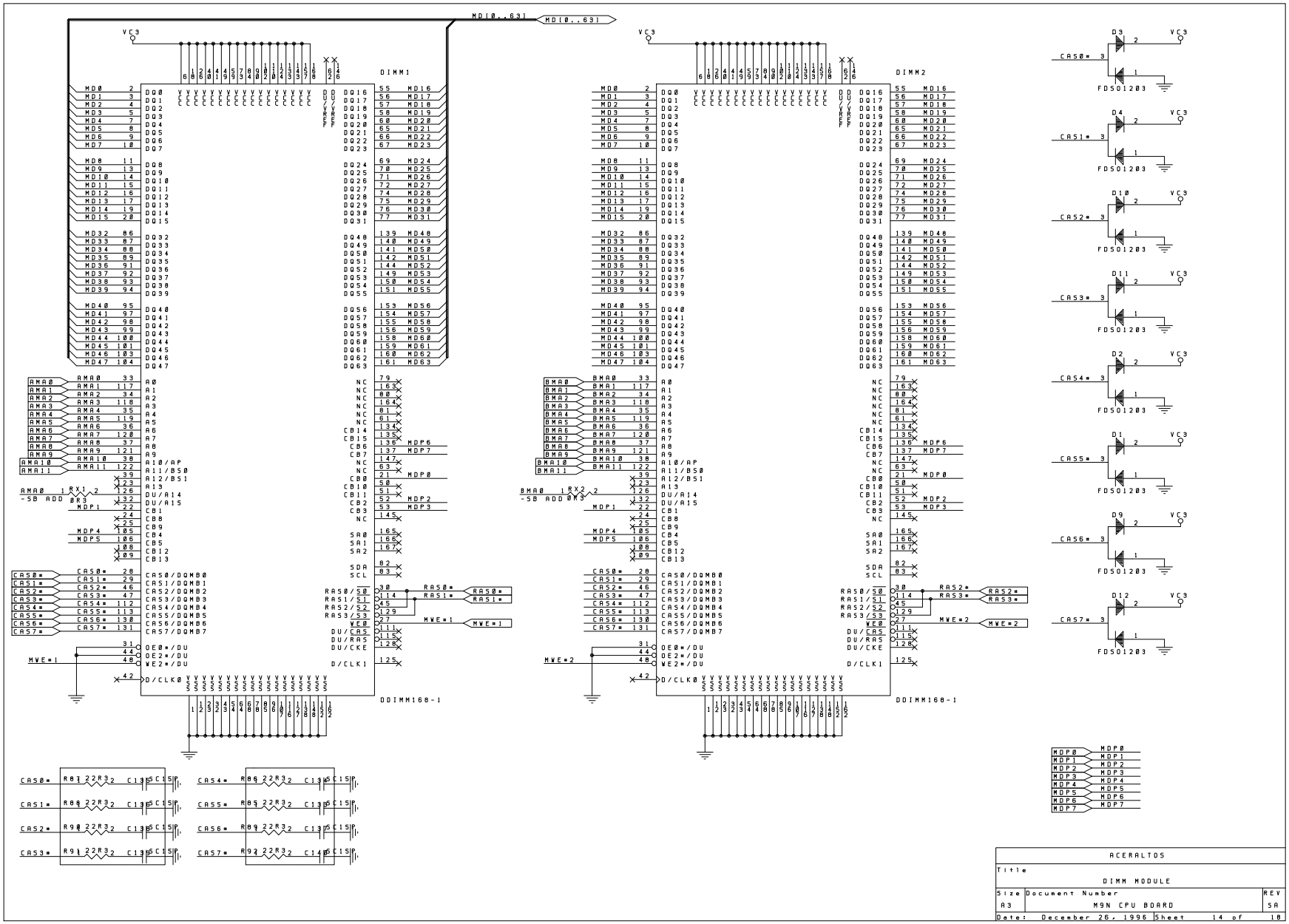

ACERALTOS		
Title: DIMM MODULE		
Size: A3	Document Number: M9N CPU BOARD	REV: 5A
Date: December 26, 1996	Sheet 14 of 18	

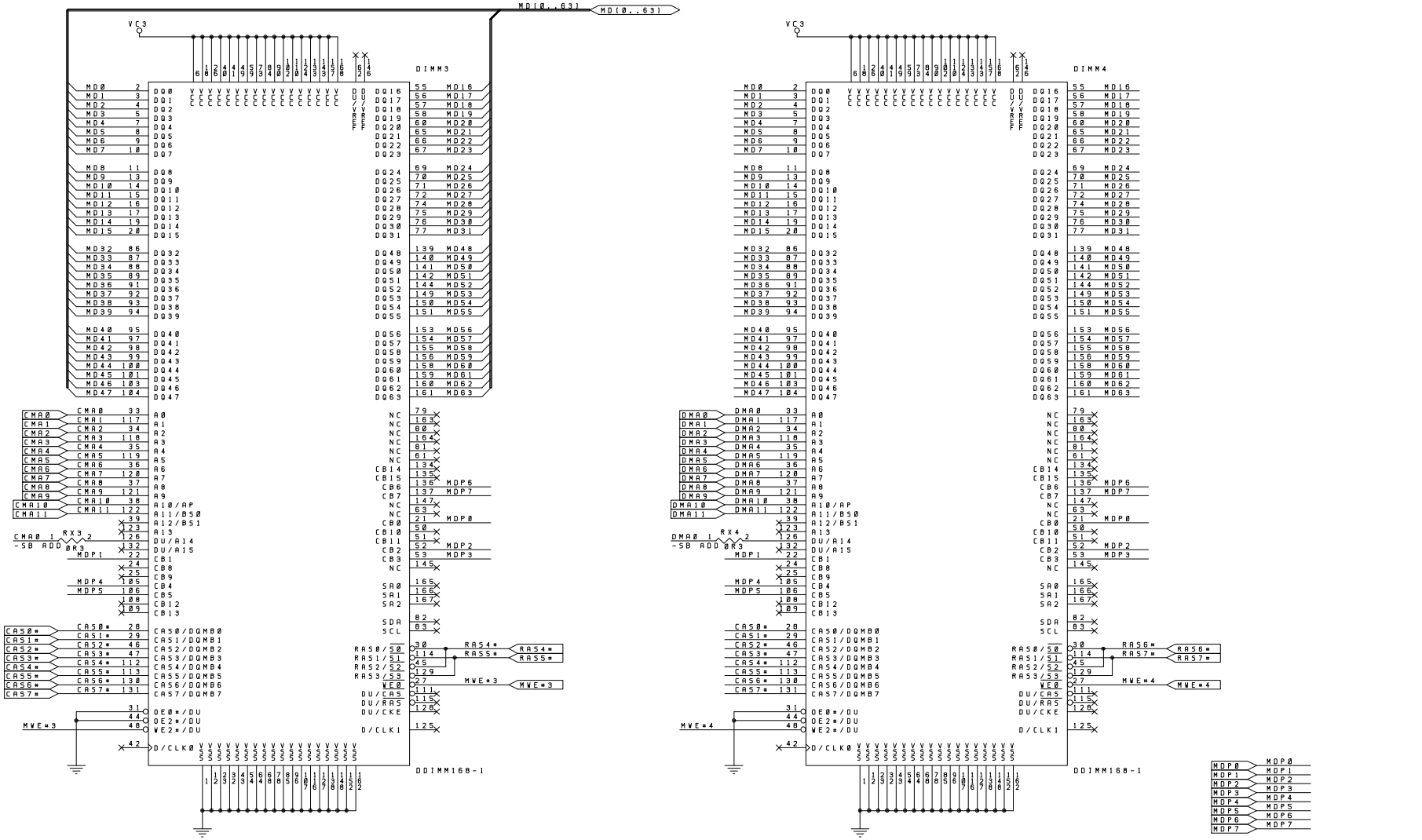

ACERALTOS		
Title: DIMM MODULE		
Size: A3	Document Number: M9N CPU BOARD	REV: 5A
Date: December 26, 1996	Sheet 15 of 18	

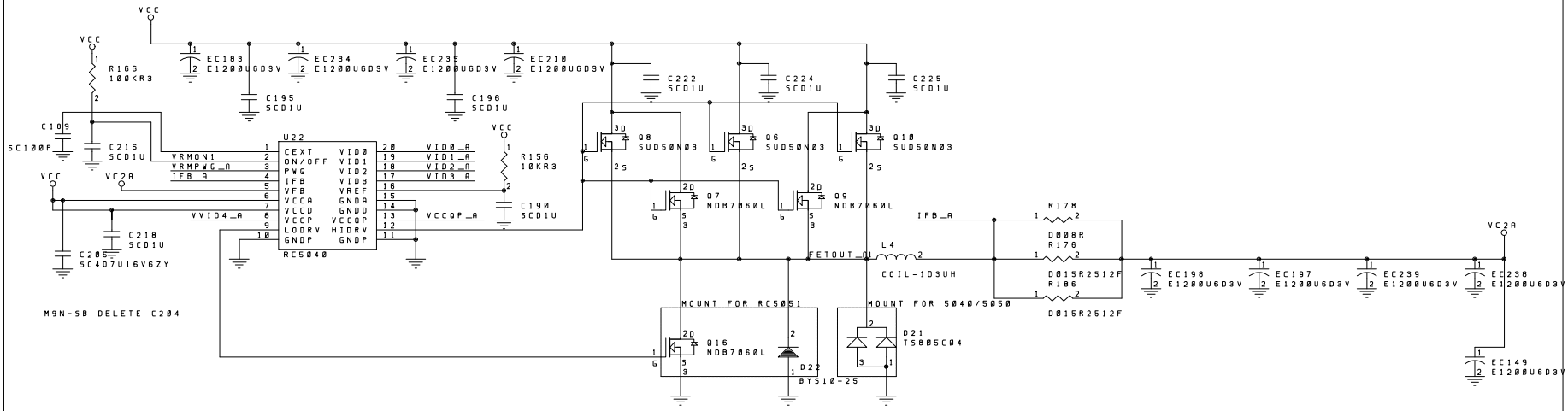

Size	Document Number	REV
A3		
Date: February 24, 1997	Sheet 16 of 18	

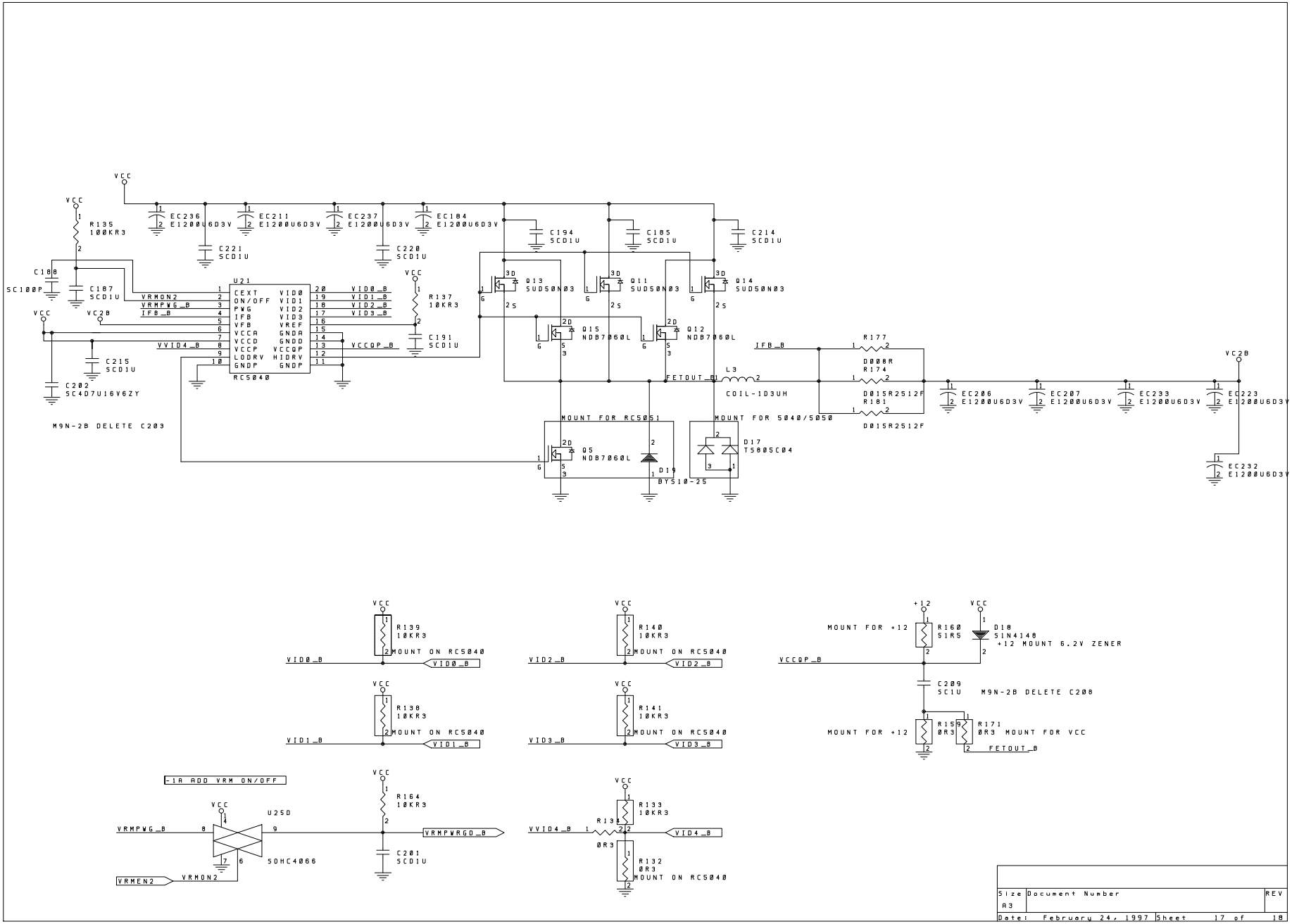

Size	Document Number	REV
A3		
Date: February 24, 1997	Sheet 17 of 18	

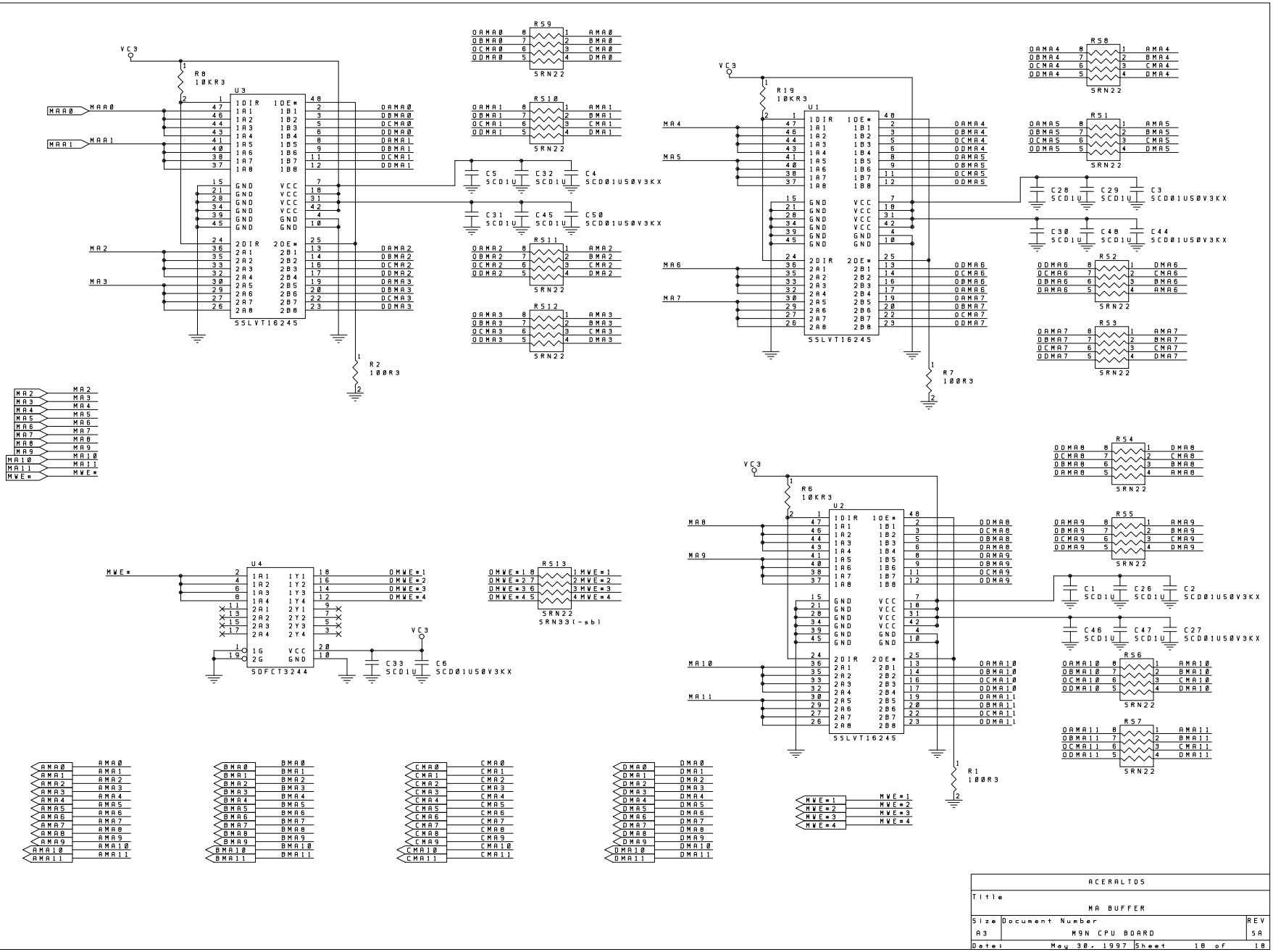

ACERALTOS		
Title: MA BUFFER		
Size: A3	Document Number: M9N CPU BOARD	REV: 5A
Date: May 30, 1997	Sheet 18 of 18	