BRISTOL-GF SCHEMATICS

CONTENTS

PAGE 1 TITLE
PAGE 2 SYSTEM BLOCK
PAGE 3,4,5 P4 LGA SOCKET
PAGE 6,7,8,9 INTEL BROADWATER
PAGE 10 DDR2 CHANNEL A DIMM X 1
PAGE 11 DDR2 CHANNEL B DIMM X 1
PAGE 12 DDR2 TERMINATION RESISTORS
PAGE 13 DDR2 DECOUPLING CAPACITORS
PAGE 14 VGA CONNECTOR
PAGE 15,16,17 ICH8
PAGE 18 CLOCK GENERATOR
PAGE 19 SIO SCH5407(SCH5127)/SCH5147 & ATX POWER CONNECTOR & OPERATOR FRONT PANEL
PAGE 20 PARALLEL PORT & SERIAL PORTS X 2 & FLOPPY CONNECTOR
PAGE 21 FAN X 3 & SATA II X 3, SCREW HOLE
PAGE 22 USB PORT X 8
PAGE 23 AUDIO CODEC AD1983 ,MONO AMP
PAGE 24 AUDIO JACKS
PAGE 25 USB PORT X 2, TPM
PAGE 26 LAN BCM5787 (10/100/1000Mbps)
PAGE 27 SYSTEM POWER
PAGE 28 CPU PWM
PAGE 29 RISER
PAGE 30 CHANGE HISTORY

REV:3.1

TITLE: BRISTOL-GF Title		REV: 3.1
Document Number: XXXXXXXX		
Prepared by: MINGZ		
SIZE: A3	Date: 2006/06/06	PAGE: 1 OF 30

BRISTOL-GF BLOCK DIAGRAM

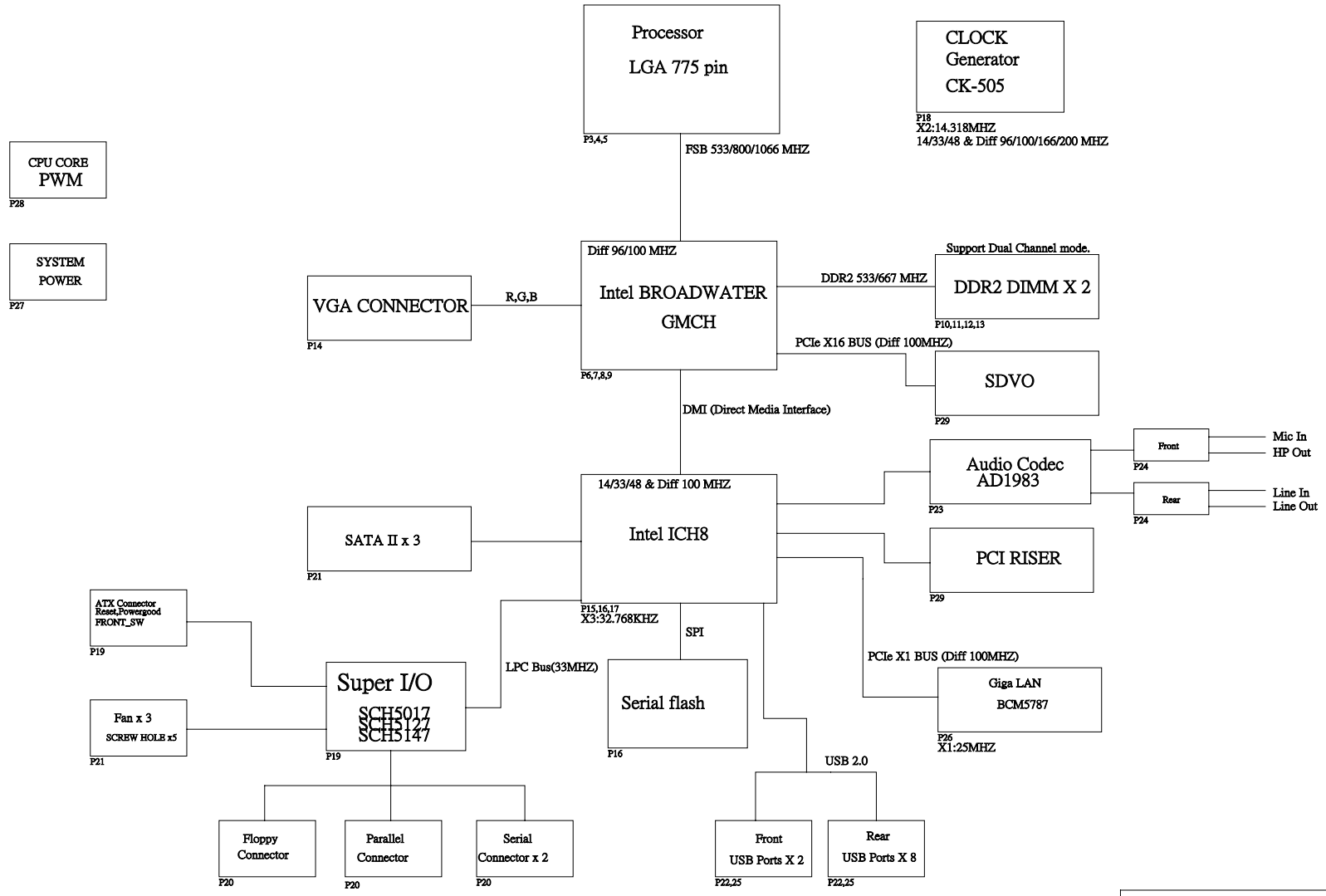

TITLE:	BRISTOL-GF System block	REV: 3.1
Document Number:	XXXXXXXX	
Prepared by:	MINGZ	
SIZE: A3	Date: 2006/06/06	PAGE: 2 OF 30

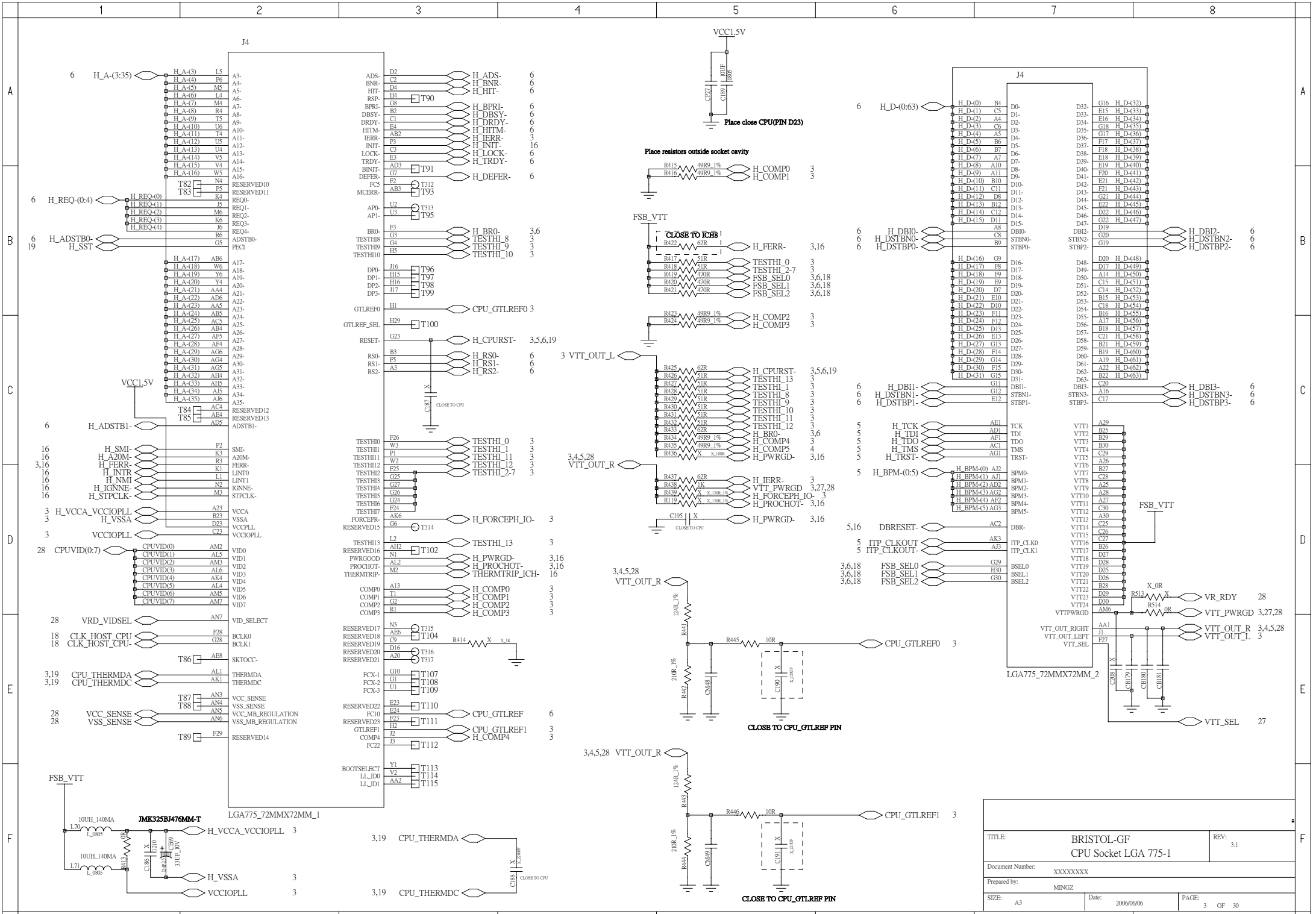
J4
LGA775_72MMX72MM_1
LGA775_72MMX72MM_2
VCC1.5V
Place close CPU(PIN D23)
Place resistors outside socket cavity
FSB_VTT
CLOSE TO ICH8
VTT_OUT_L
VTT_OUT_R
CLOSE TO CPU
CLOSE TO CPU_GTLREF PIN
JMK325BJ476MM-T
H_A-(3:35)
H_REQ-(0:4)
H_ADSTB0-
H_SST
H_ADSTB1-
H_SMI-
H_A20M-
H_FERR-
H_INTR
H_NMI
H_IGNNE-
H_STPCLK-
H_VCCA_VCCIOPLL
H_VSSA
VCCIOPLL
CPUVID(0:7)
VRD_VIDSEL
CLK_HOST_CPU
CLK_HOST_CPU-
CPU_THERMDA
CPU_THERMDC
VCC_SENSE
VSS_SENSE
H_ADS-
H_BNR-
H_HIT-
H_BPRI-
H_DBSY-
H_DRDY-
H_HITM-
H_IERR-
H_INIT-
H_LOCK-
H_TRDY-
H_DEFER-
CPU_GTLREF0
H_CPURST-
H_RS0-
H_RS1-
H_RS2-
TESTHI_0
TESTHI_1
TESTHI_11
TESTHI_12
TESTHI_2-7
TESTHI_13
H_FORCEPH_IO-
H_PWRGD-
H_PROCHOT-
THERMTRIP_ICH-
H_COMP0
H_COMP1
H_COMP2
H_COMP3
CPU_GTLREF
CPU_GTLREF1
H_COMP4
H_VCCA_VCCIOPLL
H_VSSA
VCCIOPLL
H_D-(0:63)
H_DBI0-
H_DSTBN0-
H_DSTBP0-
H_DBI1-
H_DSTBN1-
H_DSTBP1-
H_DBI2-
H_DSTBN2-
H_DSTBP2-
H_DBI3-
H_DSTBN3-
H_DSTBP3-
H_TCK
H_TDI
H_TDO
H_TMS
H_TRST-
H_BPM-(0:5)
DBRESET-
ITP_CLKOUT
ITP_CLKOUT-
FSB_SEL0
FSB_SEL1
FSB_SEL2
VR_RDY
VTT_PWRGD
VTT_OUT_R
VTT_OUT_L
VTT_SEL
TITLE:
BRISTOL-GF
CPU Socket LGA 775-1
REV:
3.1
Document Number:
XXXXXXXX
Prepared by:
MINGZ
SIZE:
A3
Date:
2006/06/06
PAGE:
3 OF 30

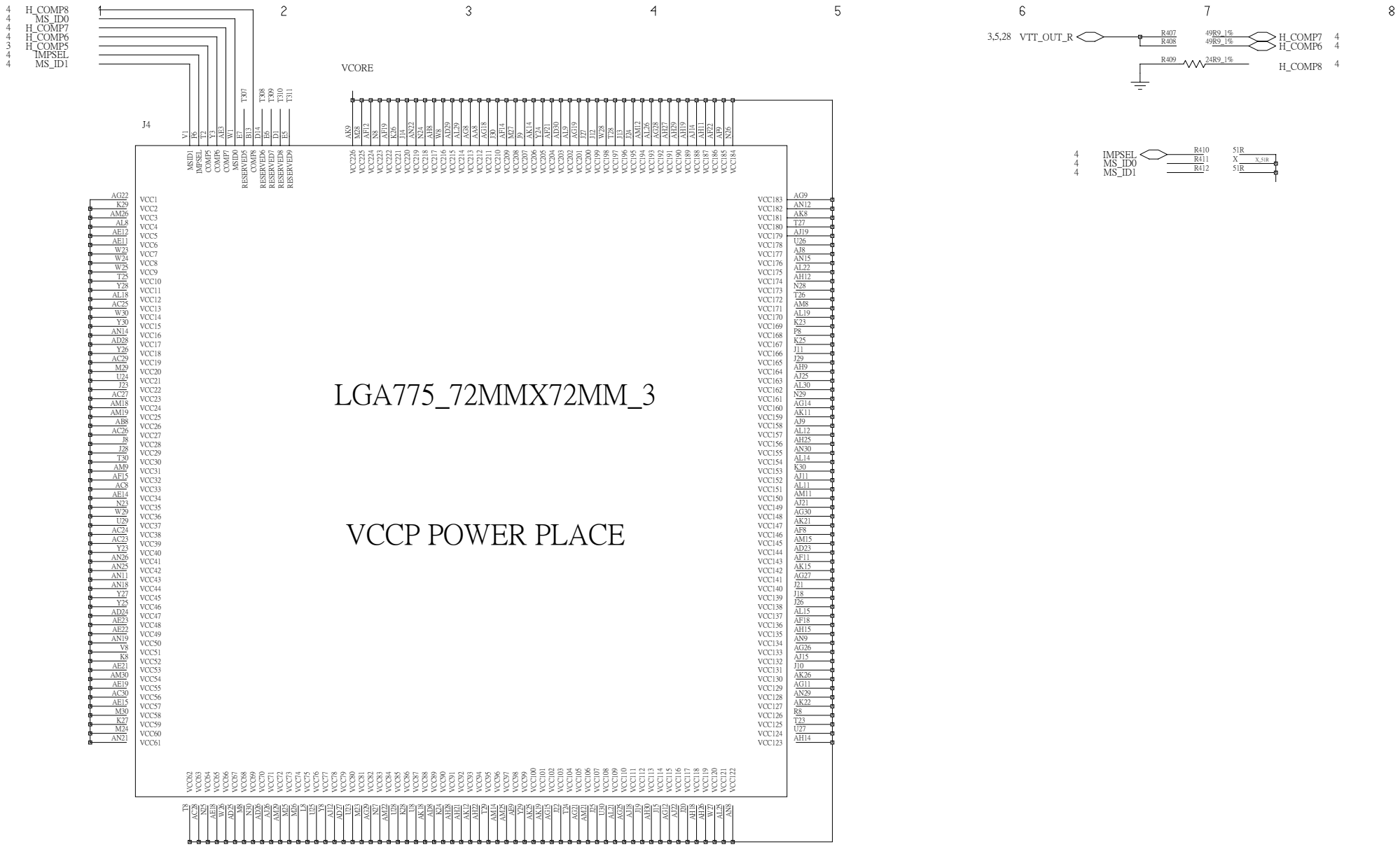

TITLE: BRISTOL-GF
CPU Socket LGA 775-2

REV: 3.1

Document Number: XXXXXXXX

Prepared by: MINGZ

SIZE: A3

Date: 2006/06/06

PAGE: 4 OF 30

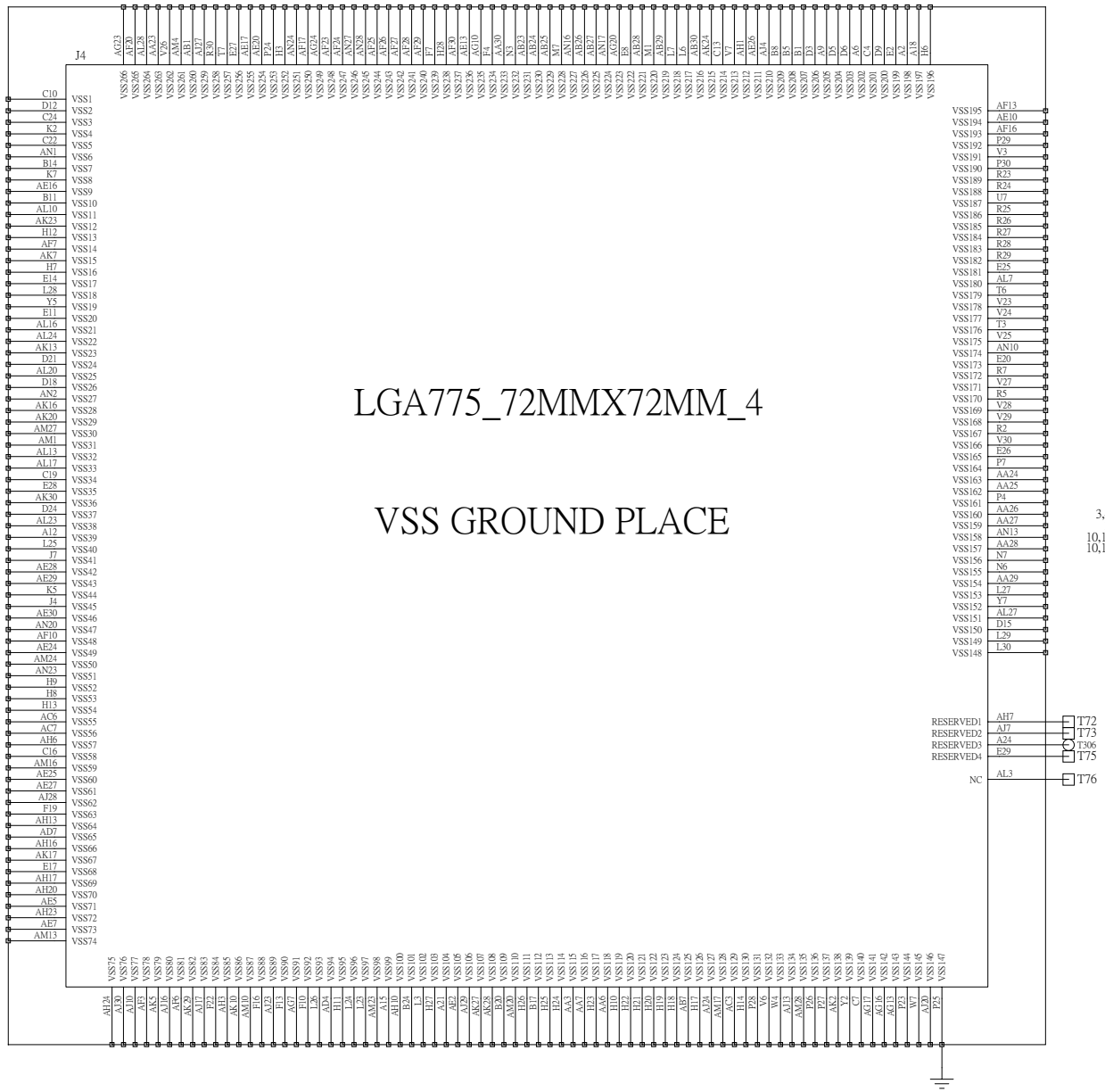

Place 7th R on back side near XDP connector
Place 8th R near connector
Place 9th R and 10th R near CPU within 1.5"

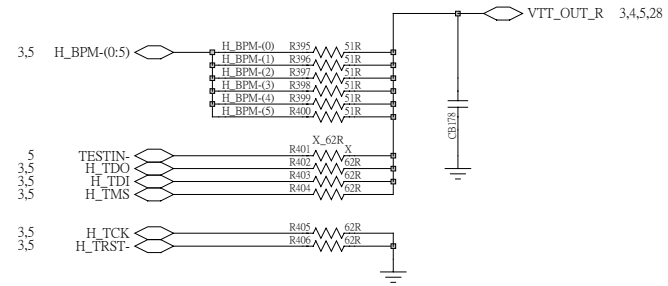

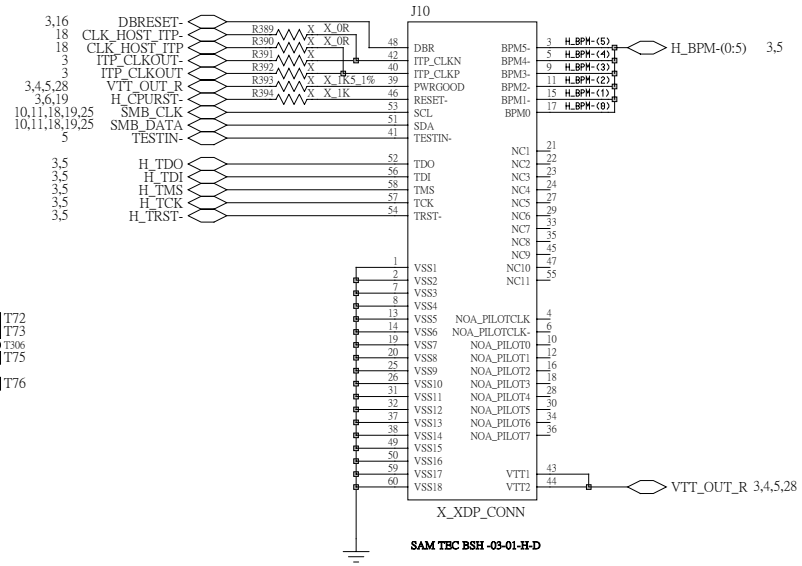

TITLE:	BRISTOL-GF CPU Socket LGA 775-3	REV: 3.1
Document Number:	XXXXXXXX	
Prepared by:	MINGZ	
SIZE: A3	Date: 2006/06/06	PAGE: 5 OF 30

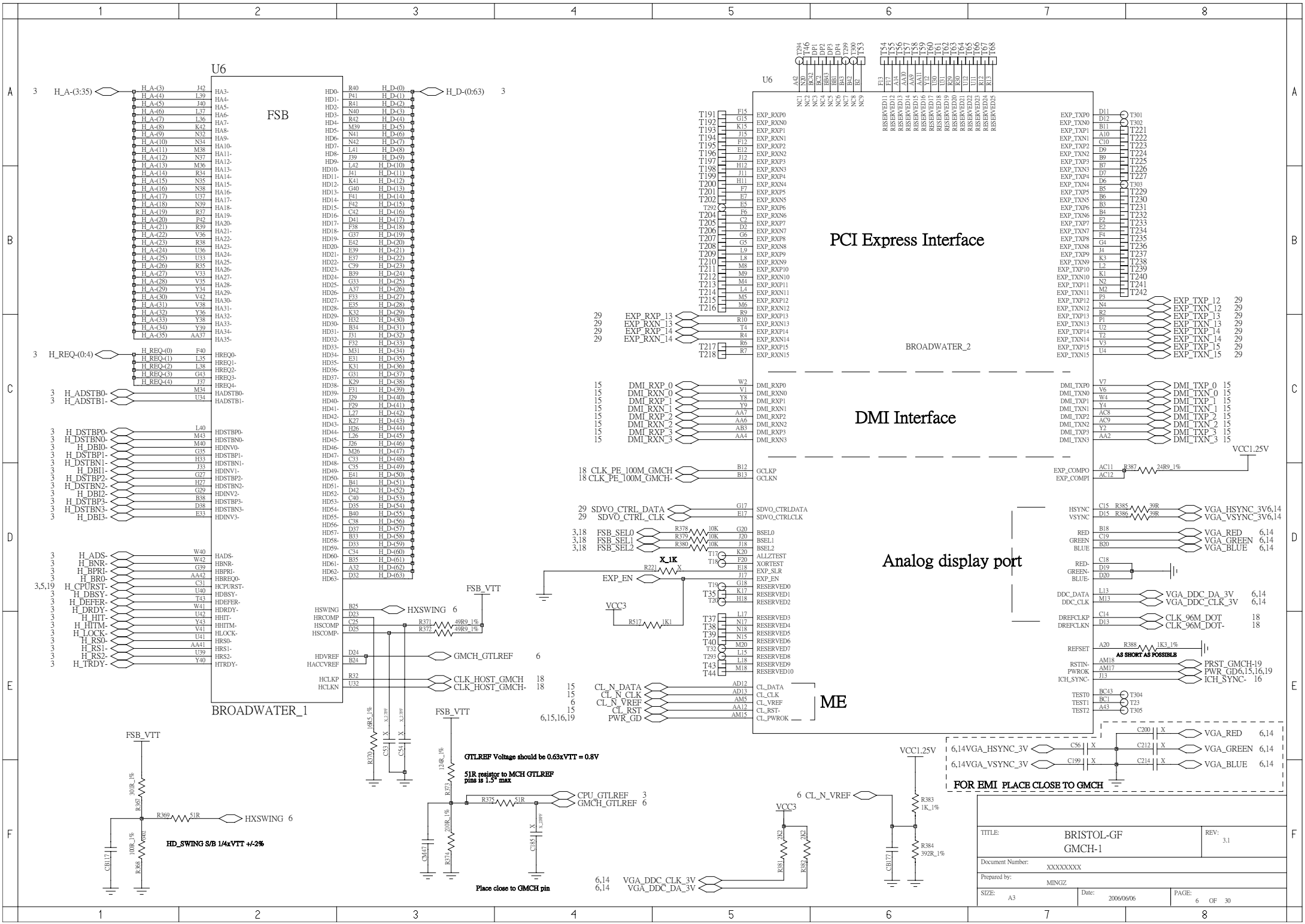
U6
FSB
BROADWATER_1
H_A-(3:35)
H_D-(0:63)
H_REQ-(0:4)
H_ADSTB0-
H_ADSTB1-
H_DSTBP0-
H_DSTBN0-
H_DBI0-
H_DSTBP1-
H_DSTBN1-
H_DBI1-
H_DSTBP2-
H_DSTBN2-
H_DBI2-
H_DSTBP3-
H_DSTBN3-
H_DBI3-
H_ADS-
H_BNR-
H_BPRI-
H_BR0-
H_CPURST-
H_DBSY-
H_DEFER-
H_DRDY-
H_HIT-
H_HITM-
H_LOCK-
H_RS0-
H_RS1-
H_RS2-
H_TRDY-
HXSWING
GMCH_GTLREF
CLK_HOST_GMCH
CLK_HOST_GMCH-
FSB_VTT
GTLREF Voltage should be 0.63xVTT = 0.8V
51R resistor to MCH GTLREF pins is 1.5" max
CPU_GTLREF
HD_SWING S/B 1/4xVTT +/-2%
Place close to GMCH pin
PCI Express Interface
BROADWATER_2
DMI Interface
Analog display port
ME
EXP_RXP_13
EXP_RXN_13
EXP_RXP_14
EXP_RXN_14
DMI_RXP_0
DMI_RXN_0
DMI_RXP_1
DMI_RXN_1
DMI_RXP_2
DMI_RXN_2
DMI_RXP_3
DMI_RXN_3
CLK_PE_100M_GMCH
CLK_PE_100M_GMCH-
SDVO_CTRL_DATA
SDVO_CTRL_CLK
FSB_SEL0
FSB_SEL1
FSB_SEL2
EXP_EN
CL_N_DATA
CL_N_CLK
CL_N_VREF
CL_RST
PWR_GD
VGA_DDC_CLK_3V
VGA_DDC_DA_3V
EXP_TXP_12
EXP_TXN_12
EXP_TXP_13
EXP_TXN_13
EXP_TXP_14
EXP_TXN_14
EXP_TXP_15
EXP_TXN_15
DMI_TXP_0
DMI_TXN_0
DMI_TXP_1
DMI_TXN_1
DMI_TXP_2
DMI_TXN_2
DMI_TXP_3
DMI_TXN_3
VCC1.25V
VGA_HSYNC_3V
VGA_VSYNC_3V
VGA_RED
VGA_GREEN
VGA_BLUE
CLK_96M_DOT
CLK_96M_DOT-
PRST_GMCH
PWR_GD
ICH_SYNC-
FOR EMI PLACE CLOSE TO GMCH
TITLE: BRISTOL-GF GMCH-1
REV: 3.1
Document Number: XXXXXXXX
Prepared by: MINGZ
SIZE: A3
Date: 2006/06/06
PAGE: 6 OF 30

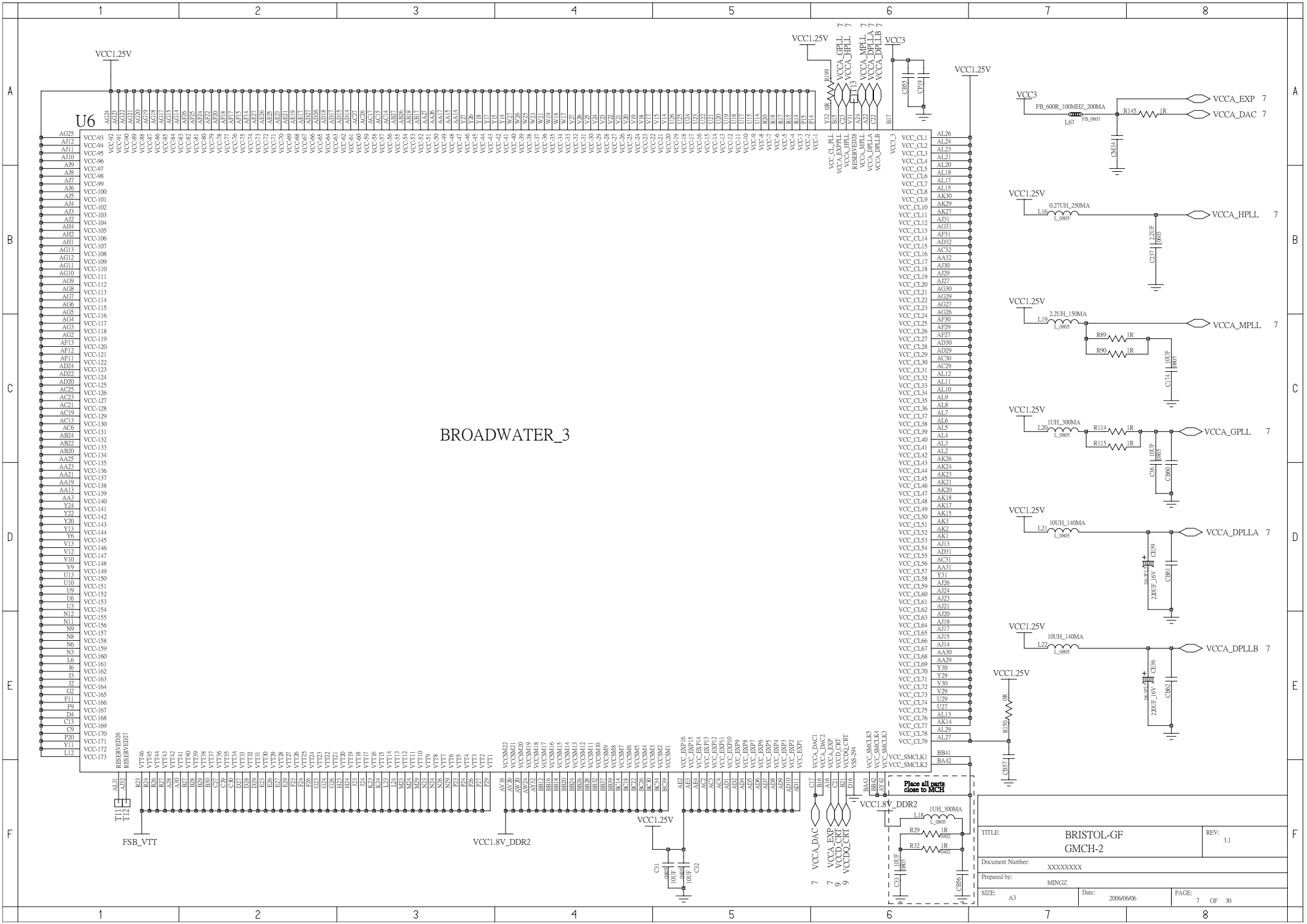
U6
BROADWATER_3
VCC1.25V
VCC3
VCCA_EXP
VCCA_DAC
VCCA_HPLL
VCCA_MPLL
VCCA_GPLL
VCCA_DPLLA
VCCA_DPLLB
VCC1.8V_DDR2
FSB_VTT
FB_600R_100MHZ_200MA
0.27UH_250MA
2.2UH_150MA
1UH_300MA
10UH_140MA
Place all parts close to MCH
TITLE:
BRISTOL-GF
GMCH-2
REV:
3.1
Document Number:
XXXXXXXX
Prepared by:
MINGZ
SIZE:
A3
Date:
2006/06/06
PAGE:
7 OF 30

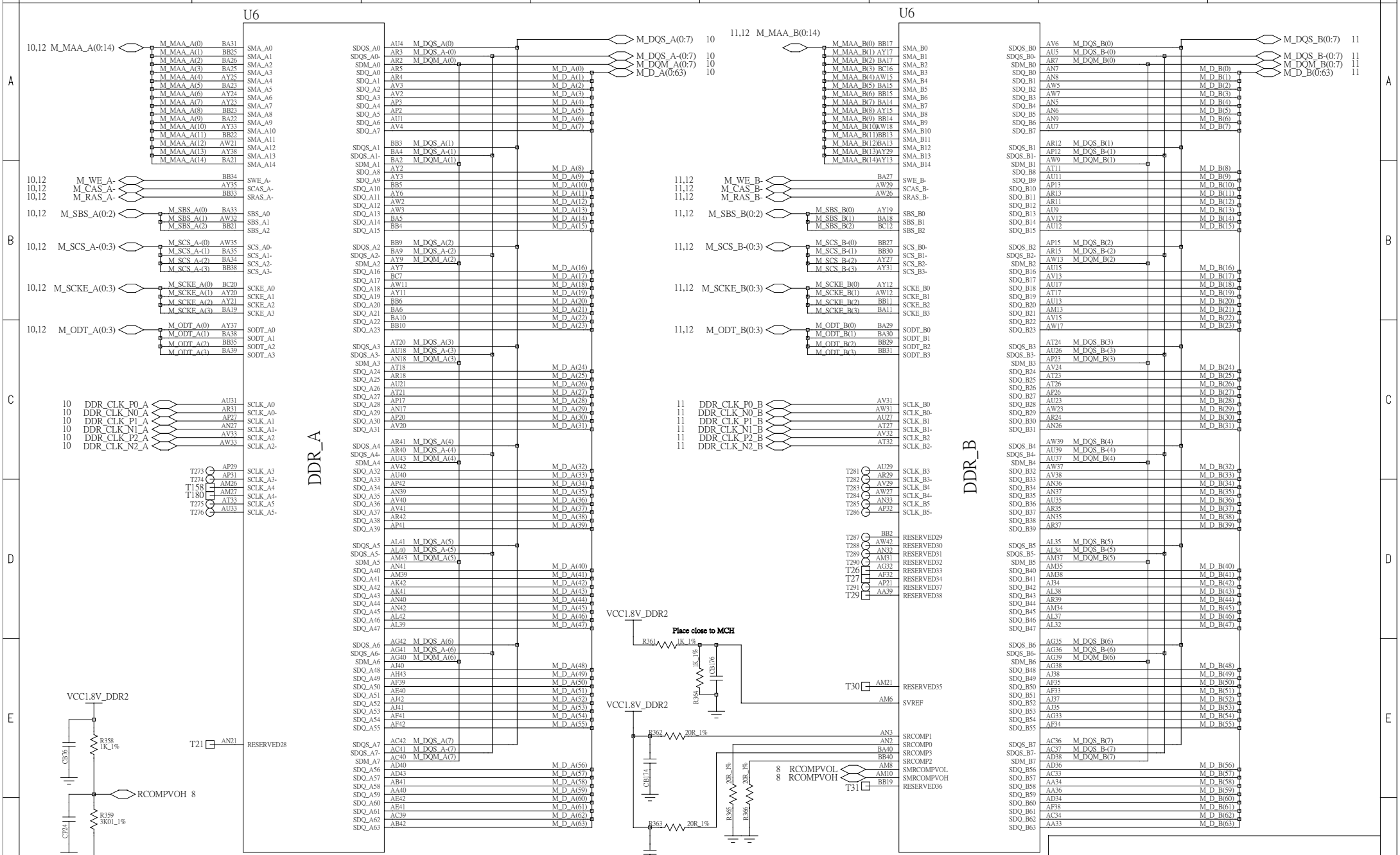
U6
DDR_A
BROADWATER_4
U6
DDR_B
BROADWATER_5
M_DQS_A(0:7)
M_DQS_A-(0:7)
M_DQM_A(0:7)
M_D_A(0:63)
M_DQS_B(0:7)
M_DQS_B-(0:7)
M_DQM_B(0:7)
M_D_B(0:63)
M_MAA_A(0:14)
M_MAA_B(0:14)
M_WE_A-
M_CAS_A-
M_RAS_A-
M_SBS_A(0:2)
M_SCS_A-(0:3)
M_SCKE_A(0:3)
M_ODT_A(0:3)
M_WE_B-
M_CAS_B-
M_RAS_B-
M_SBS_B(0:2)
M_SCS_B-(0:3)
M_SCKE_B(0:3)
M_ODT_B(0:3)
DDR_CLK_P0_A
DDR_CLK_N0_A
DDR_CLK_P1_A
DDR_CLK_N1_A
DDR_CLK_P2_A
DDR_CLK_N2_A
DDR_CLK_P0_B
DDR_CLK_N0_B
DDR_CLK_P1_B
DDR_CLK_N1_B
DDR_CLK_P2_B
DDR_CLK_N2_B
VCC1.8V_DDR2
Place close to MCH
R361 1K_1%
R364 1K_1%
CB176
T30
SVREF
RESERVED35
T21
RESERVED28
R358 1K_1%
R359 3K01_1%
R360 1K_1%
RCOMPVOH 8
RCOMPVOL 8
R362 20R_1%
R363 20R_1%
R365 20R_1%
R366 20R_1%
CB174
CB175
SRCOMP1
SRCOMP0
SRCOMP3
SRCOMP2
SMRCOMPVOL
SMRCOMPVOH
RESERVED36
T31
TITLE:
BRISTOL-GF
GMCH-3
REV:
3.1
Document Number:
XXXXXXXX
Prepared by:
MINGZ
SIZE:
A3
Date:
2006/06/06
PAGE:
8 OF 30

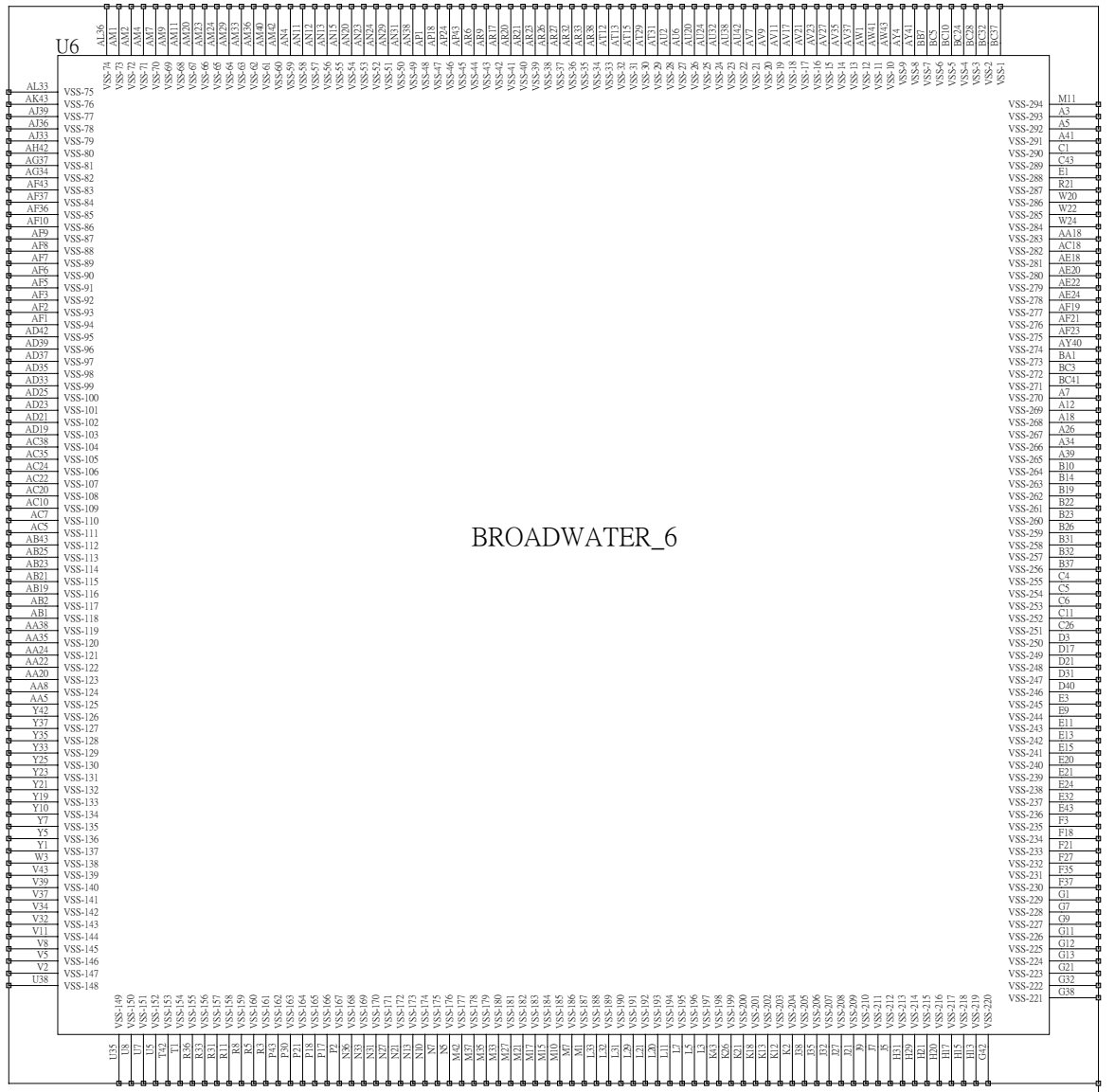

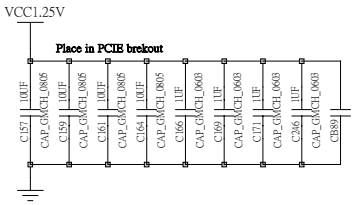

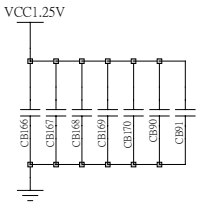

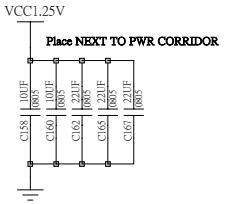

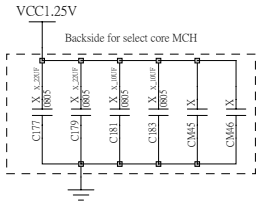

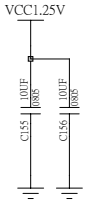

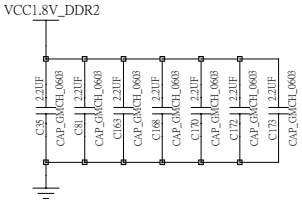

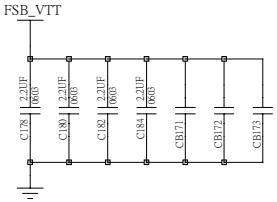

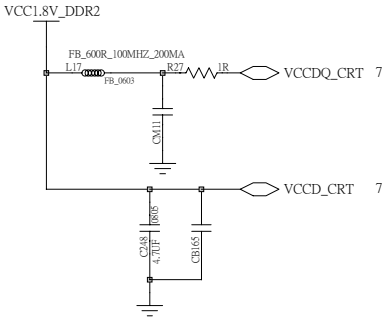

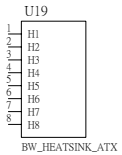

TITLE: BRISTOL-GF GMCH-4		REV: 3.1
Document Number: XXXXXXXX		
Prepared by: MINGZ		
SIZE: A3	Date: 2006/06/06	PAGE: 9 OF 30

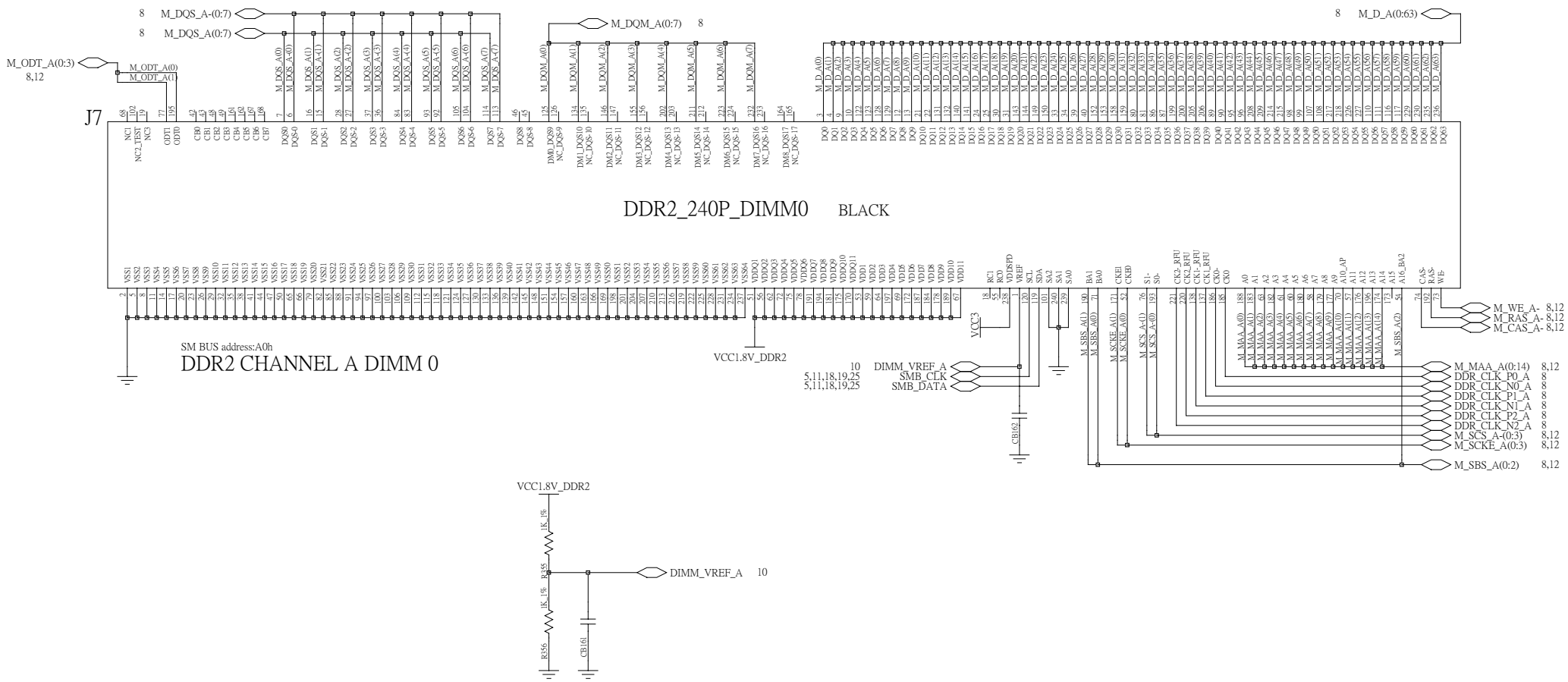

TITLE:	BRISTOL-GF DDR2 Channel A DIMM
REV:	3.1
Document Number:	XXXXXXXX
Prepared by:	MINGZ
SIZE:	A3
Date:	2006/06/06
PAGE:	10 OF 30

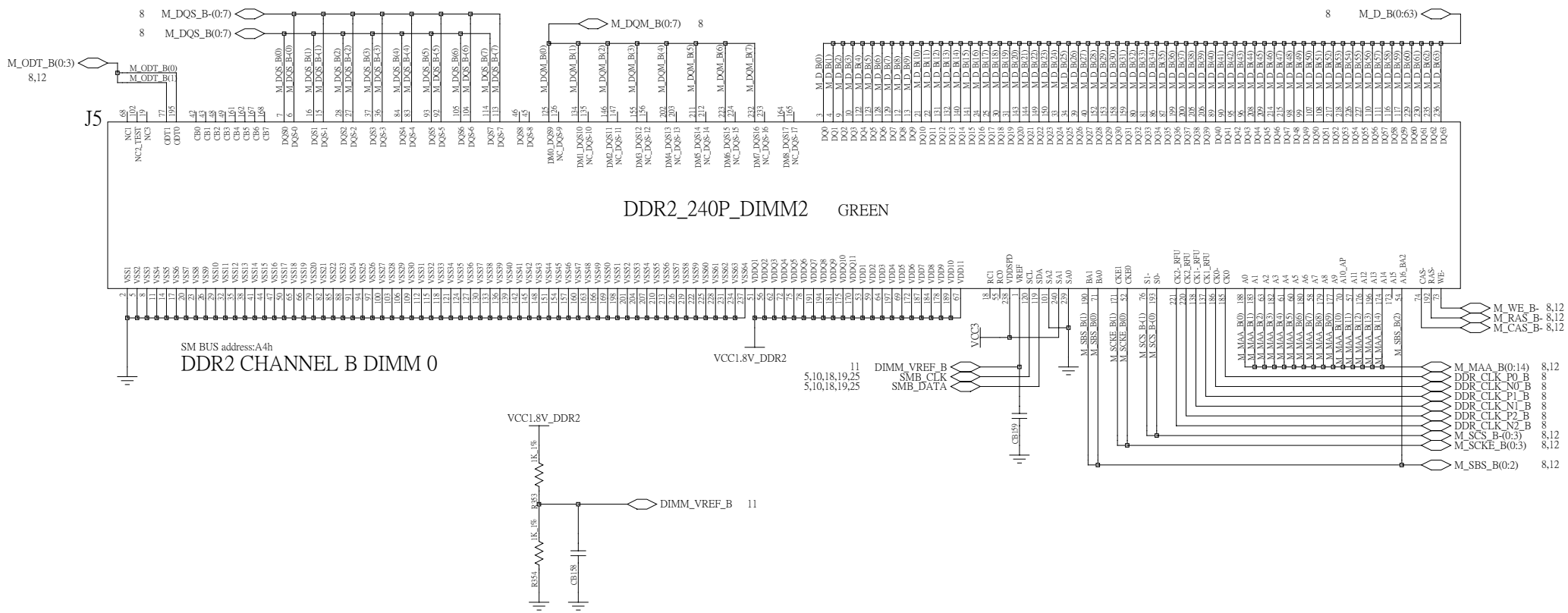

TITLE:	BRISTOL-GF DDR Channel B DIMM
REV:	3.1
Document Number:	XXXXXXXX
Prepared by:	MINGZ
SIZE:	A3
Date:	2006/06/06
PAGE:	11 OF 30

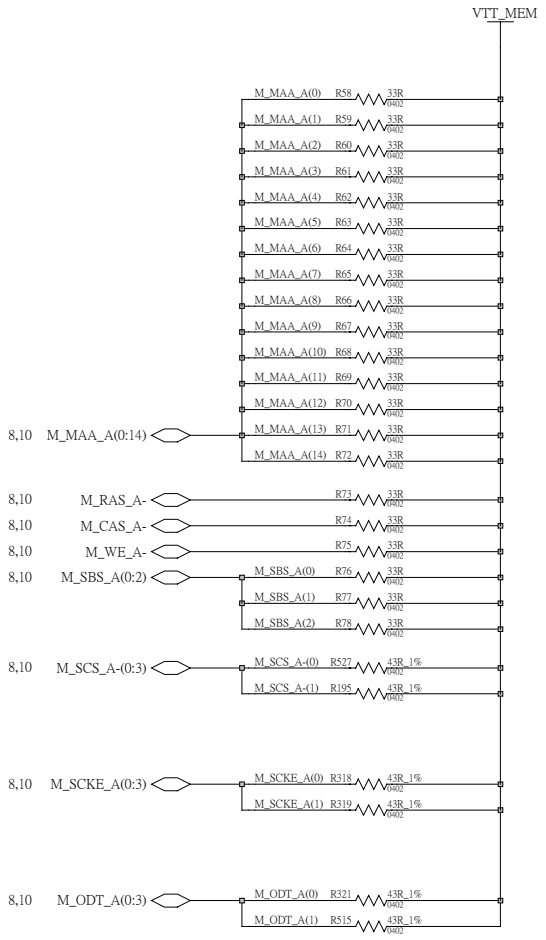

Channel A Termination resistors

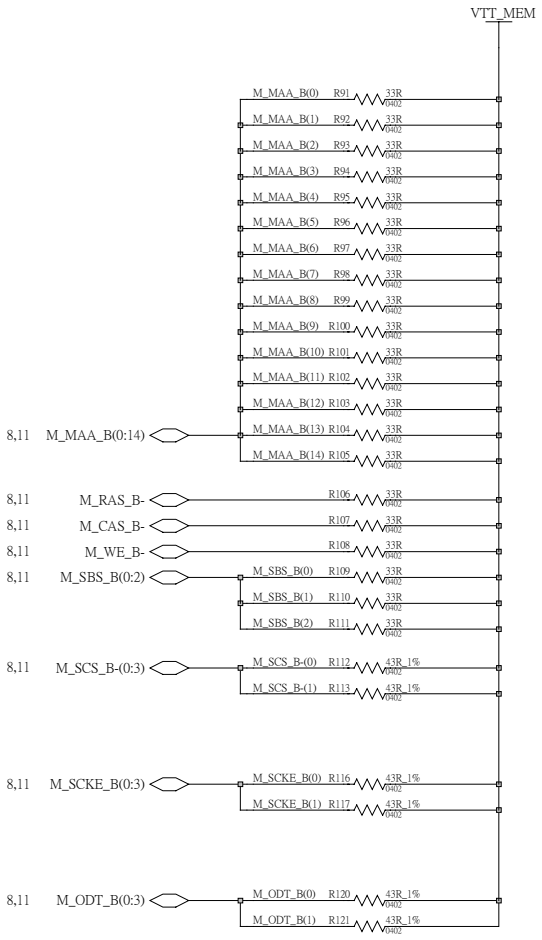

Channel B Termination resistors

TITLE:	BRISTOL-GF DDR2 VTT Termination	REV: 3.1
Document Number:	XXXXXXXX	
Prepared by:	MINGZ	
SIZE: A3	Date: 2006/06/06	PAGE: 12 OF 30

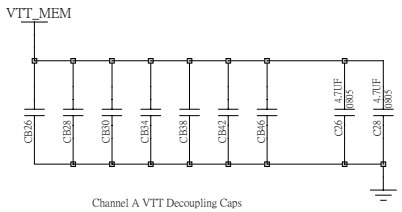

Channel A VTT Decoupling Caps

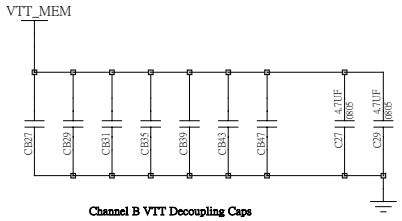

Channel B VTT Decoupling Caps

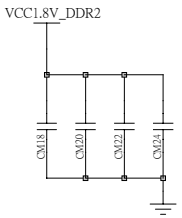

Channel A (Each DIMM must have 4 X 1.0UF capacitors.)

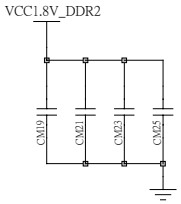

Channel B (Each DIMM must have 4 X 1.0UF capacitors.)

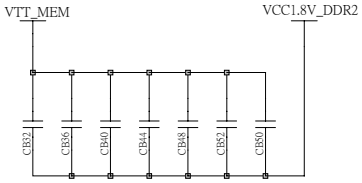

Channel A

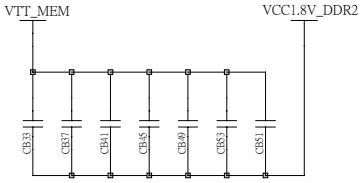

Channel B

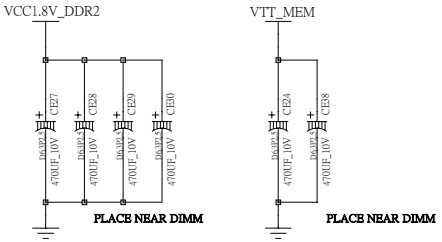

TITLE:	BRISTOL-GF DDR2 Decoupling	REV: 3.1
Document Number:	XXXXXXXX	
Prepared by:	MINGZ	
SIZE: A3	Date: 2006/06/06	PAGE: 13 OF 30

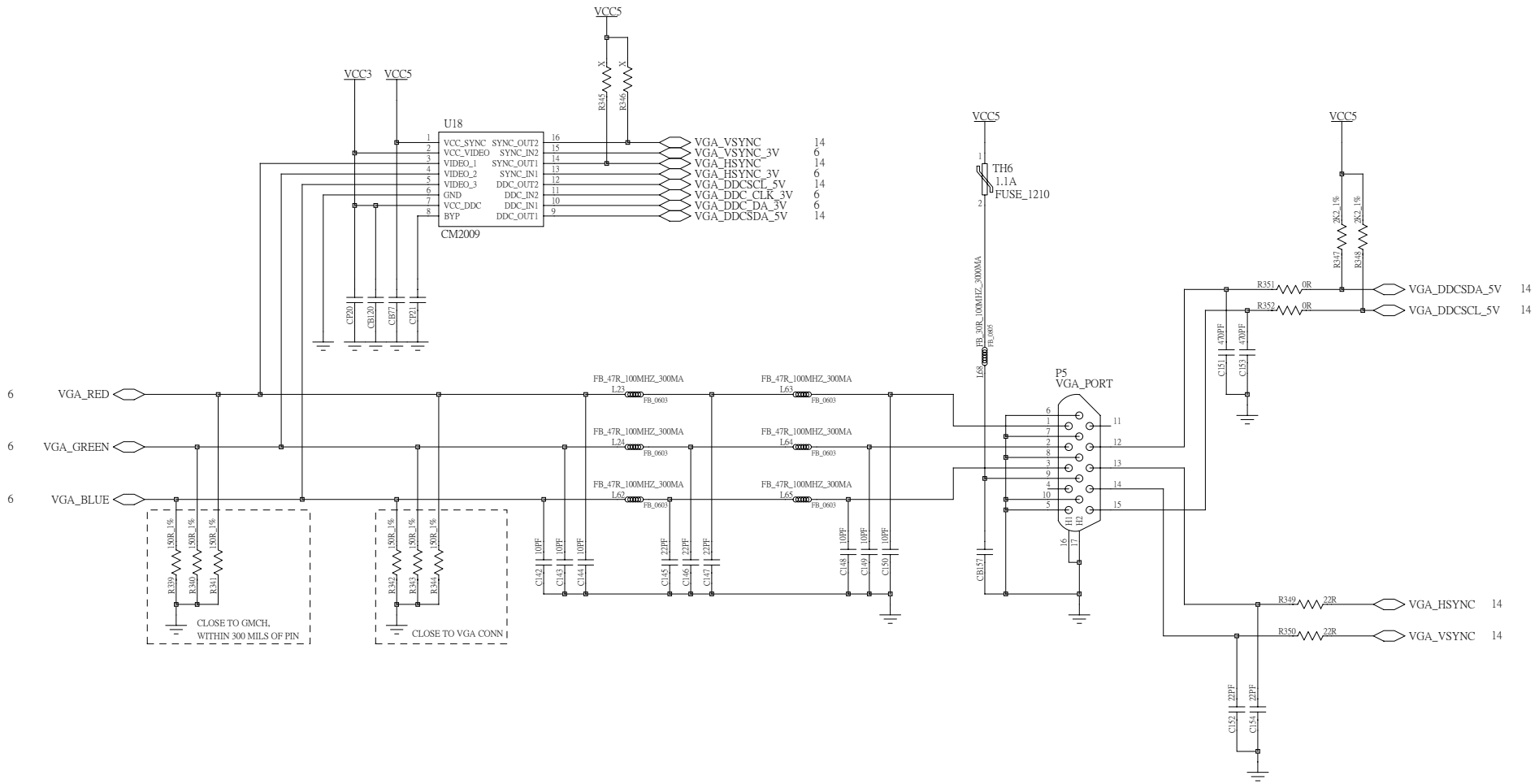

TITLE:	BRISTOL-GF VGA Port	REV: 3.1
Document Number:	XXXXXXXX	
Prepared by:	MINGZ	
SIZE: A3	Date: 2006/06/06	PAGE: 14 OF 30

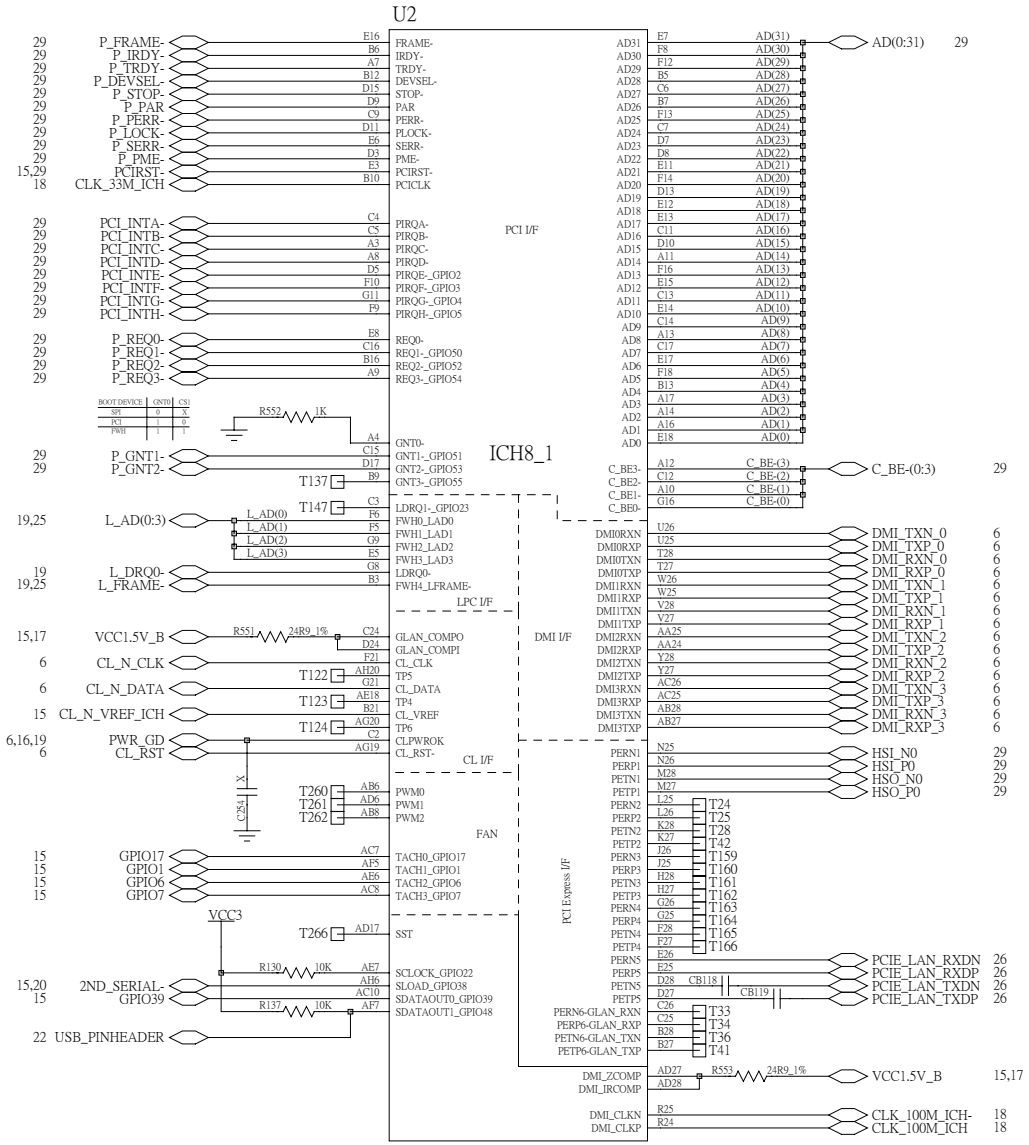

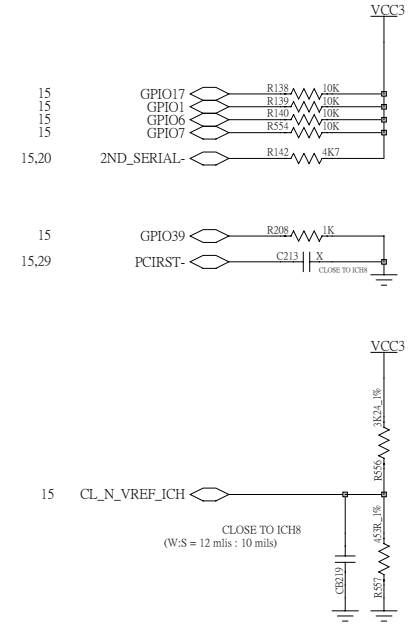

TITLE:	BRISTOL-GF ICH8-1
REV:	3.1
Document Number:	XXXXXXXX
Prepared by:	MINGZ
SIZE:	A3
Date:	2006/06/06
PAGE:	15 OF 30

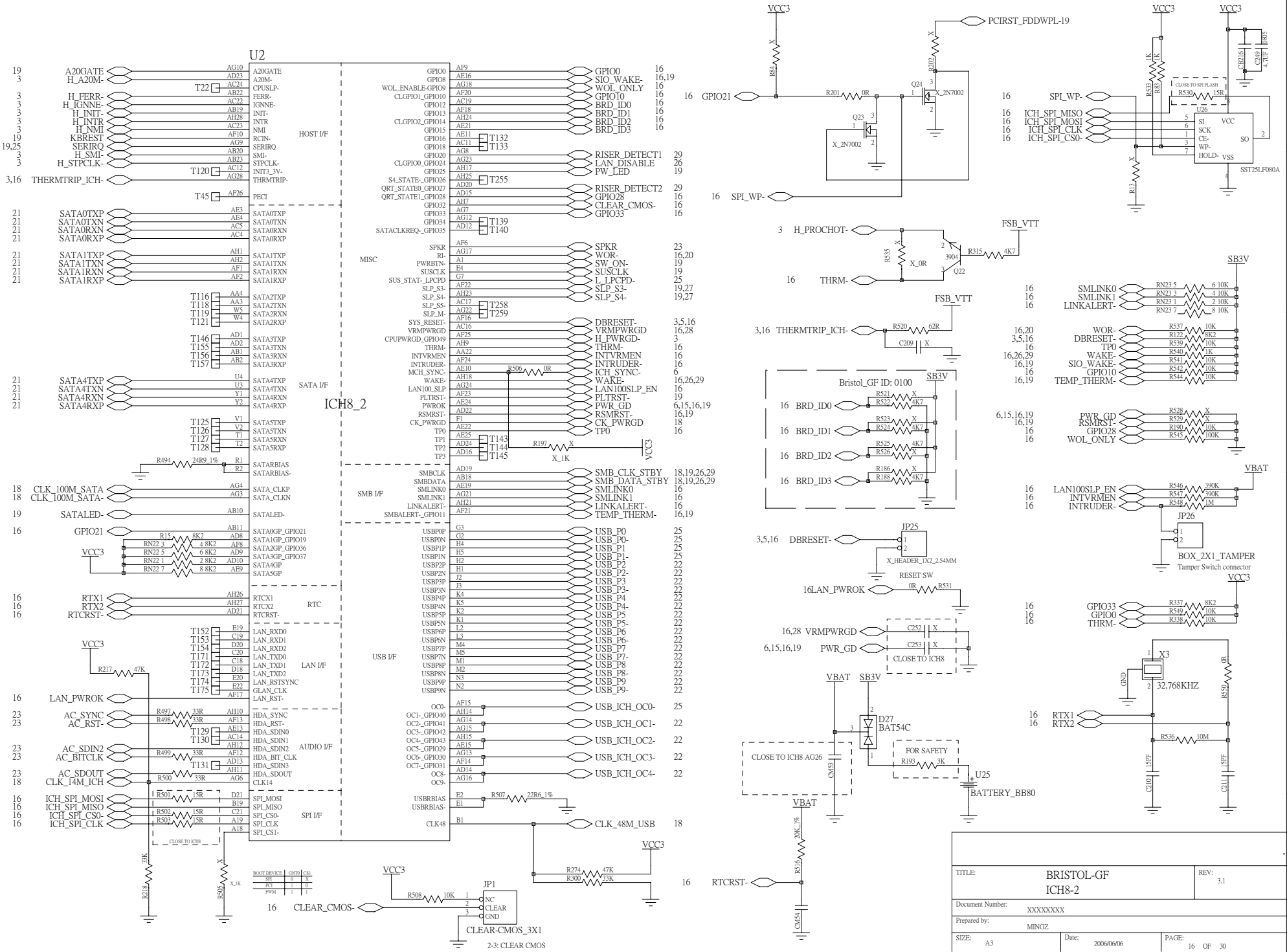
U2
ICH8_2
HOST I/F
SATA I/F
MISC
SMB I/F
RTC
LAN I/F
USB I/F
AUDIO I/F
SPI I/F
A20GATE
A20M-
FERR-
IGNNE-
INIT-
INTR
NMI
RCIN-
SERIRQ
SMI-
STPCLK-
INIT3_3V-
THRMTRIP-
PECI
SATA0TXP
SATA0TXN
SATA0RXN
SATA0RXP
SATA1TXP
SATA1TXN
SATA1RXN
SATA1RXP
SATA2TXP
SATA2TXN
SATA2RXN
SATA2RXP
SATA3TXP
SATA3TXN
SATA3RXN
SATA3RXP
SATA4TXP
SATA4TXN
SATA4RXN
SATA4RXP
SATA5TXP
SATA5TXN
SATA5RXN
SATA5RXP
SATARBIAS
SATARBIAS-
SATA_CLKP
SATA_CLKN
SATALED-
SATA0GP_GPIO21
SATA1GP_GPIO19
SATA2GP_GPIO36
SATA3GP_GPIO37
SATA4GP
SATA5GP
RTCX1
RTCX2
RTCRST-
LAN_RXD0
LAN_RXD1
LAN_RXD2
LAN_TXD0
LAN_TXD1
LAN_TXD2
LAN_RSTSYNC
GLAN_CLK
LAN_RST-
HDA_SYNC
HDA_RST-
HDA_SDIN0
HDA_SDIN1
HDA_SDIN2
HDA_BIT_CLK
HDA_SDIN3
HDA_SDOUT
CLK14
SPI_MOSI
SPI_MISO
SPI_CS0-
SPI_CLK
SPI_CS1-
GPIO0
SIO_WAKE-
WOL_ONLY
GPIO10
BRD_ID0
BRD_ID1
BRD_ID2
BRD_ID3
RISER_DETECT1
LAN_DISABLE
PW_LED
RISER_DETECT2
GPIO28
CLEAR_CMOS-
GPIO33
SPKR
WOR-
SW_ON-
SUSCLK
L_LPCPD-
SLP_S3-
SLP_S4-
DBRESET-
VRMPWRGD
H_PWRGD-
THRM-
INTVRMEN
INTRUDER-
ICH_SYNC-
WAKE-
LAN100SLP_EN
PLTRST-
PWR_GD
RSMRST-
CK_PWRGD
TP0
SMB_CLK_STBY
SMB_DATA_STBY
SMLINK0
SMLINK1
LINKALERT-
TEMP_THERM-
USB_P0
USB_P0-
USB_P1
USB_P1-
USB_P2
USB_P2-
USB_P3
USB_P3-
USB_P4
USB_P4-
USB_P5
USB_P5-
USB_P6
USB_P6-
USB_P7
USB_P7-
USB_P8
USB_P8-
USB_P9
USB_P9-
USB_ICH_OC0-
USB_ICH_OC1-
USB_ICH_OC2-
USB_ICH_OC3-
USB_ICH_OC4-
CLK_48M_USB
CLOSE TO ICH8
BOOT DEVICE
SPI
PCI
FWH
GNT0
CS1
JP1
NC
CLEAR
GND
CLEAR-CMOS_3X1
2-3: CLEAR CMOS
VCC3
PCIRST_FDDWPL-19
Q24
Q23
X_2N7002
Q22
FSB_VTT
H_PROCHOT-
THRM-
THERMTRIP_ICH-
SB3V
Bristol_GF ID: 0100
BRD_ID0
BRD_ID1
BRD_ID2
BRD_ID3
JP25
X_HEADER_1X2_2.54MM
RESET SW
LAN_PWROK
VRMPWRGD
PWR_GD
CLOSE TO ICH8
VBAT
D27
BAT54C
CLOSE TO ICH8 AG26
FOR SAFETY
U25
BATTERY_BB80
RTCRST-
SPI_WP-
ICH_SPI_MISO
ICH_SPI_MOSI
ICH_SPI_CLK
ICH_SPI_CS0-
CLOSE TO SPI FLASH
U26
SST25LF080A
SI
SCK
CE-
WP-
HOLD-
VCC
SO
VSS
LAN100SLP_EN
INTVRMEN
INTRUDER-
JP26
BOX_2X1_TAMPER
Tamper Switch connector
X3
32.768KHZ
RTX1
RTX2
TITLE:
BRISTOL-GF
ICH8-2
REV:
3.1
Document Number:
XXXXXXXX
Prepared by:
MINGZ
SIZE:
A3
Date:
2006/06/06
PAGE:
16 OF 30

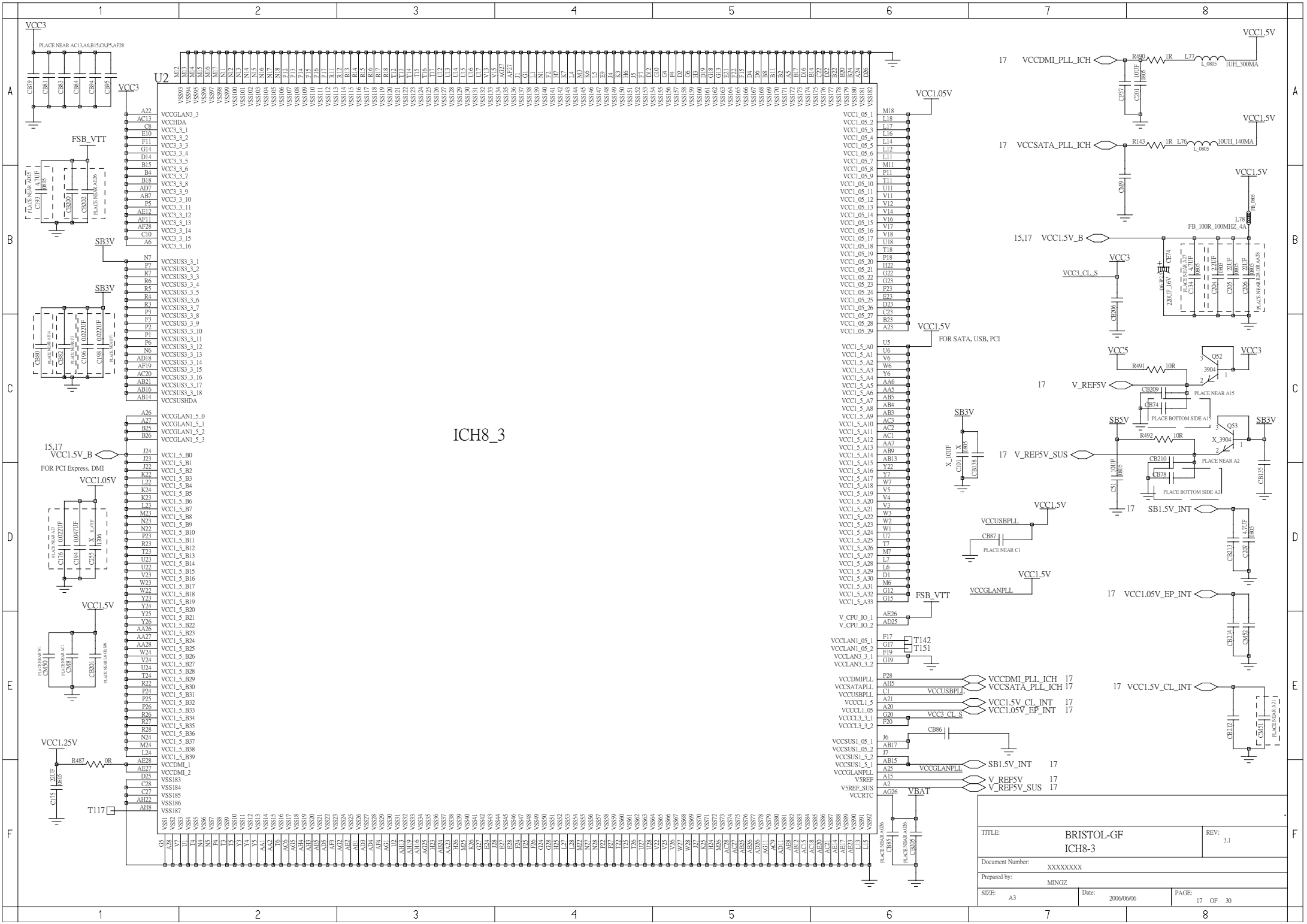
ICH8_3
U2
VCC3
VCC1.5V
VCC1.05V
FSB_VTT
SB3V
VCC1.5V_B
VCC1.25V
VBAT
VCC5
SB5V
VCC3_CL_S
VCCDMI_PLL_ICH
VCCSATA_PLL_ICH
VCC1.5V_B
V_REF5V
V_REF5V_SUS
SB1.5V_INT
VCC1.05V_EP_INT
VCC1.5V_CL_INT
FOR SATA, USB, PCI
FOR PCI Express, DMI
TITLE:
BRISTOL-GF
ICH8-3
REV:
3.1
Document Number:
XXXXXXXX
Prepared by:
MINGZ
SIZE:
A3
Date:
2006/06/06
PAGE:
17 OF 30

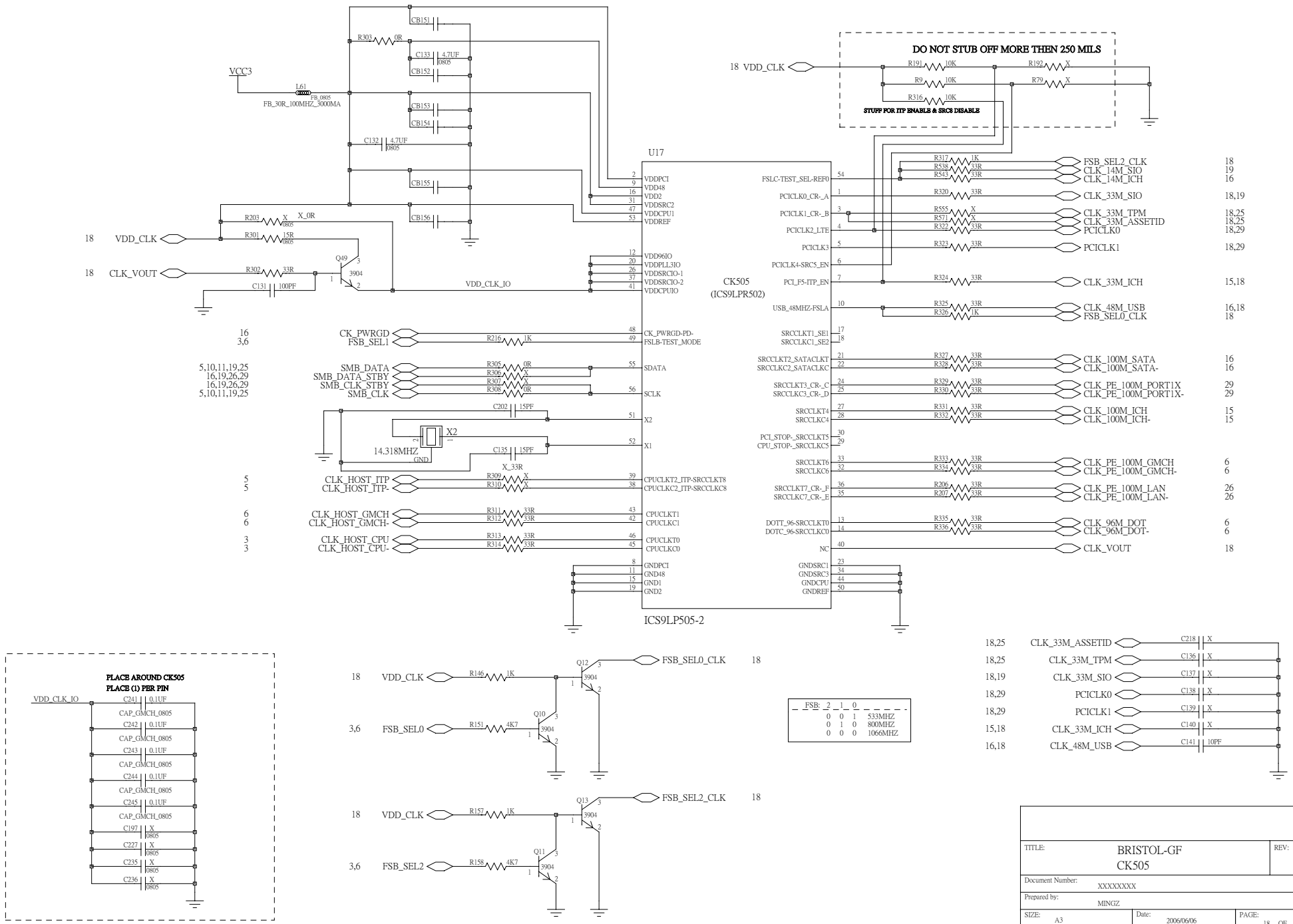
DO NOT STUB OFF MORE THEN 250 MILS
STUFF FOR ITP ENABLE & SRC8 DISABLE
U17
CK505
(ICS9LPR502)
ICS9LP505-2
VCC3
L61
FB_0805
FB_30R_100MHZ_3000MA
VDD_CLK
CLK_VOUT
VDD_CLK_IO
X_0R
X_33R
CK_PWRGD
FSB_SEL1
SMB_DATA
SMB_DATA_STBY
SMB_CLK_STBY
SMB_CLK
X2
14.318MHZ
GND
CLK_HOST_ITP
CLK_HOST_ITP-
CLK_HOST_GMCH
CLK_HOST_GMCH-
CLK_HOST_CPU
CLK_HOST_CPU-
FSB_SEL2_CLK
CLK_14M_SIO
CLK_14M_ICH
CLK_33M_SIO
CLK_33M_TPM
CLK_33M_ASSETID
PCICLK0
PCICLK1
CLK_33M_ICH
CLK_48M_USB
FSB_SEL0_CLK
CLK_100M_SATA
CLK_100M_SATA-
CLK_PE_100M_PORT1X
CLK_PE_100M_PORT1X-
CLK_100M_ICH
CLK_100M_ICH-
CLK_PE_100M_GMCH
CLK_PE_100M_GMCH-
CLK_PE_100M_LAN
CLK_PE_100M_LAN-
CLK_96M_DOT
CLK_96M_DOT-
CLK_VOUT
PLACE AROUND CK505
PLACE (1) PER PIN
FSB_SEL0
FSB_SEL2
FSB: 2 1 0
0 0 1 533MHZ
0 1 0 800MHZ
0 0 0 1066MHZ
TITLE: BRISTOL-GF CK505
REV: 3.1
Document Number: XXXXXXXX
Prepared by: MINGZ
SIZE: A3
Date: 2006/06/06
PAGE: 18 OF 30

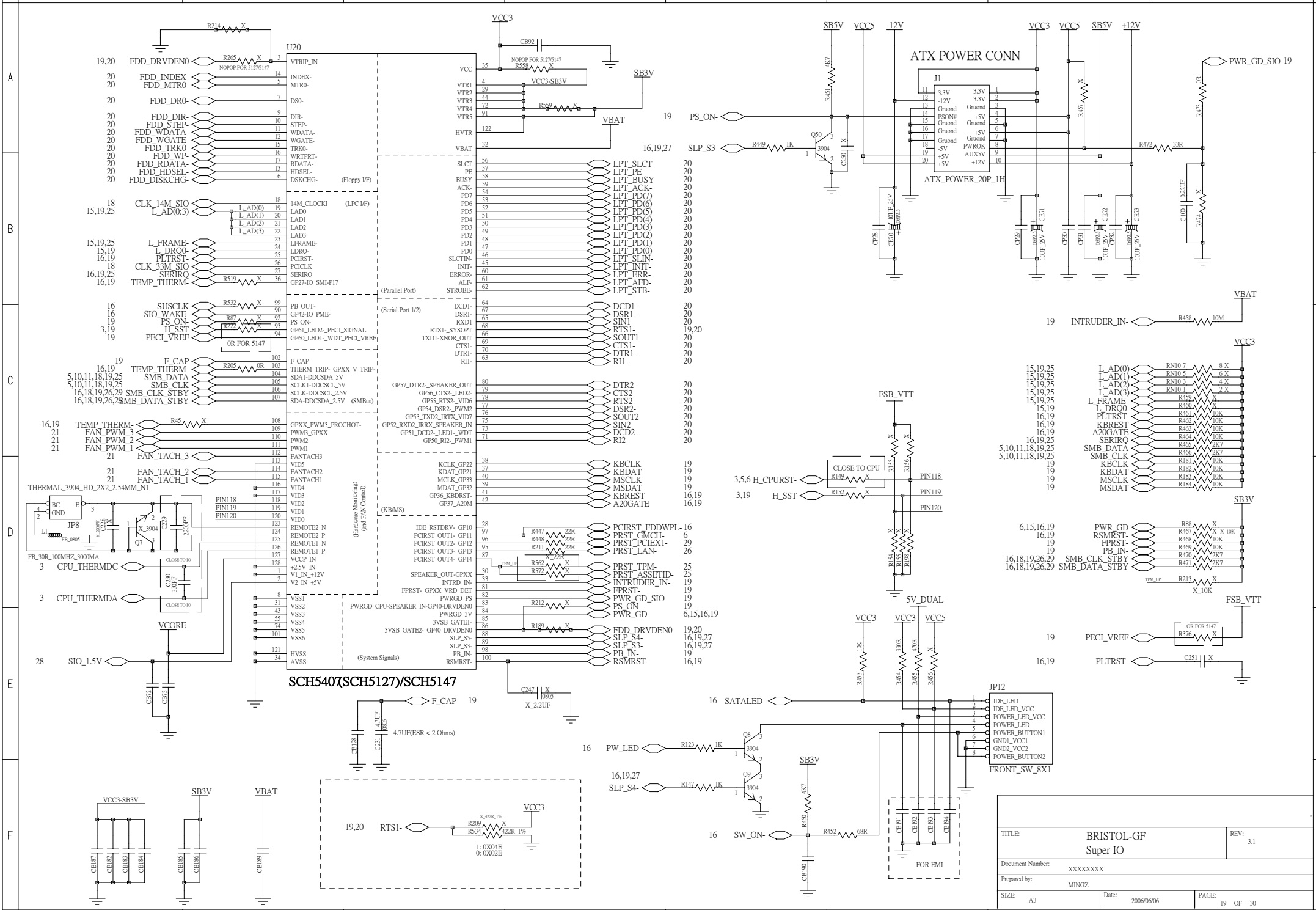
U20
SCH5407(SCH5127)/SCH5147
ATX POWER CONN
J1
ATX_POWER_20P_1H
JP8
JP12
FRONT_SW_8X1
FOR EMI
BRISTOL-GF
Super IO
TITLE:
REV:
3.1
Document Number:
XXXXXXXX
Prepared by:
MINGZ
SIZE:
A3
Date:
2006/06/06
PAGE:
19 OF 30

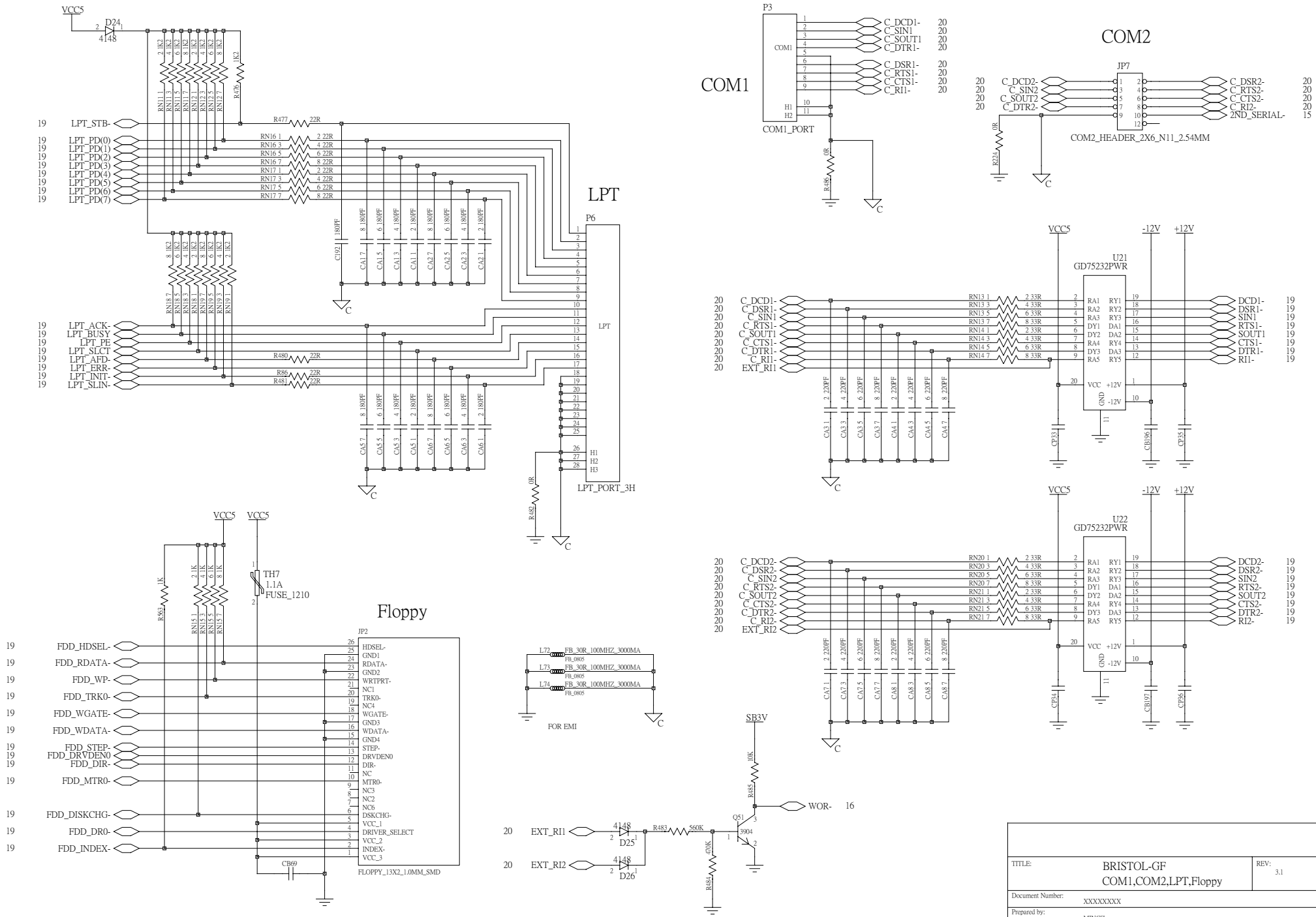

TITLE:	BRISTOL-GF COM1,COM2,LPT,Floppy
REV:	3.1
Document Number:	XXXXXXXX
Prepared by:	MINGZ
SIZE:	A3
Date:	2006/06/06
PAGE:	20 OF 30

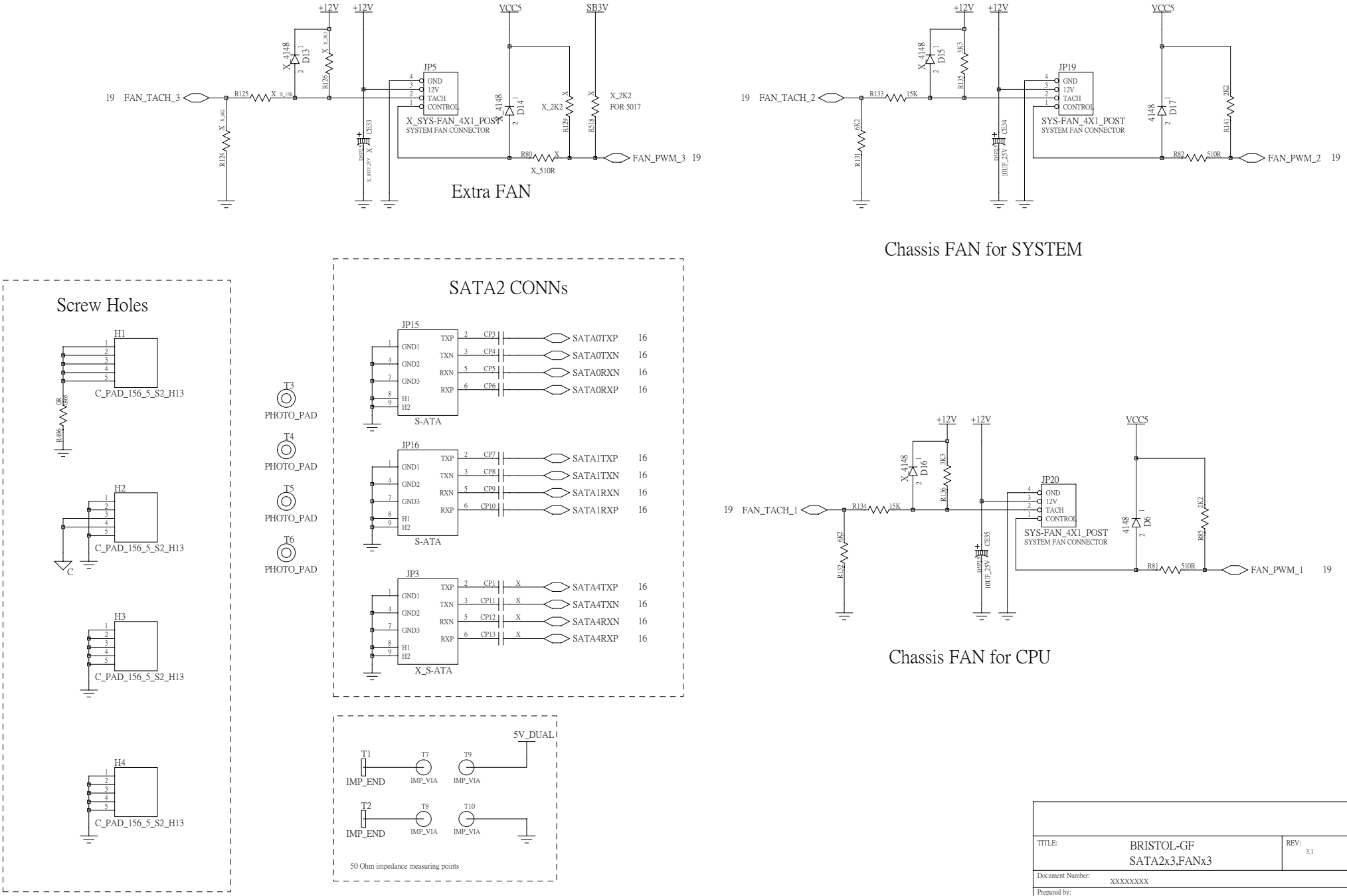

TITLE:	BRISTOL-GF SATA2x3,FANx3
REV:	3.1
Document Number:	XXXXXXXX
Prepared by:	MINGZ
SIZE:	A3
Date:	2006/06/06
PAGE:	21 OF 30

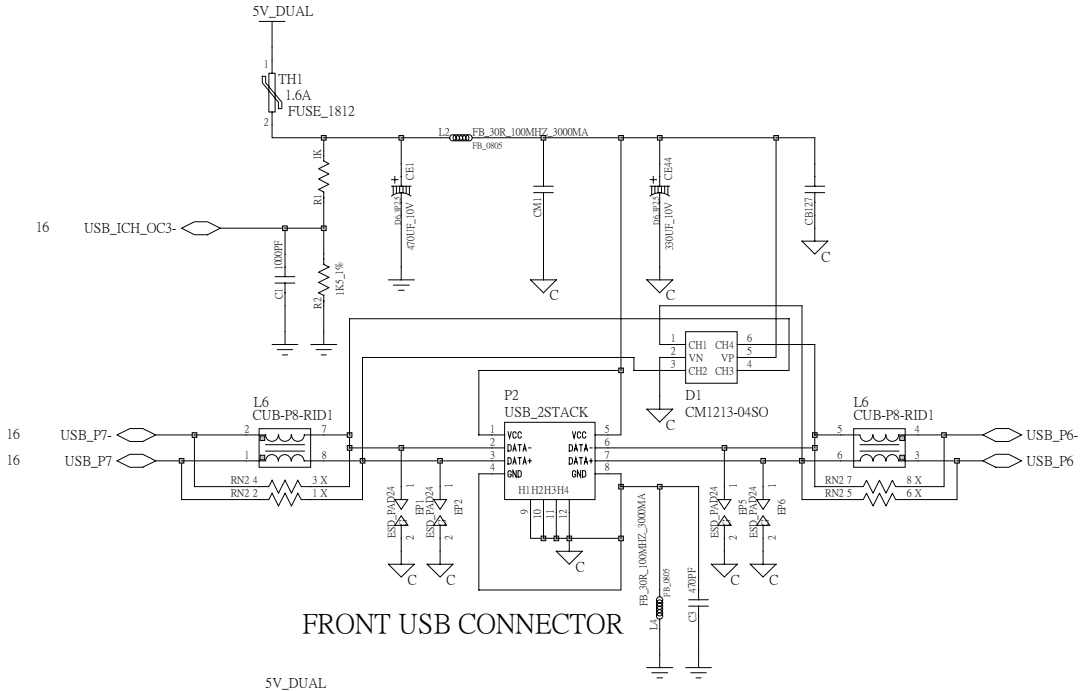

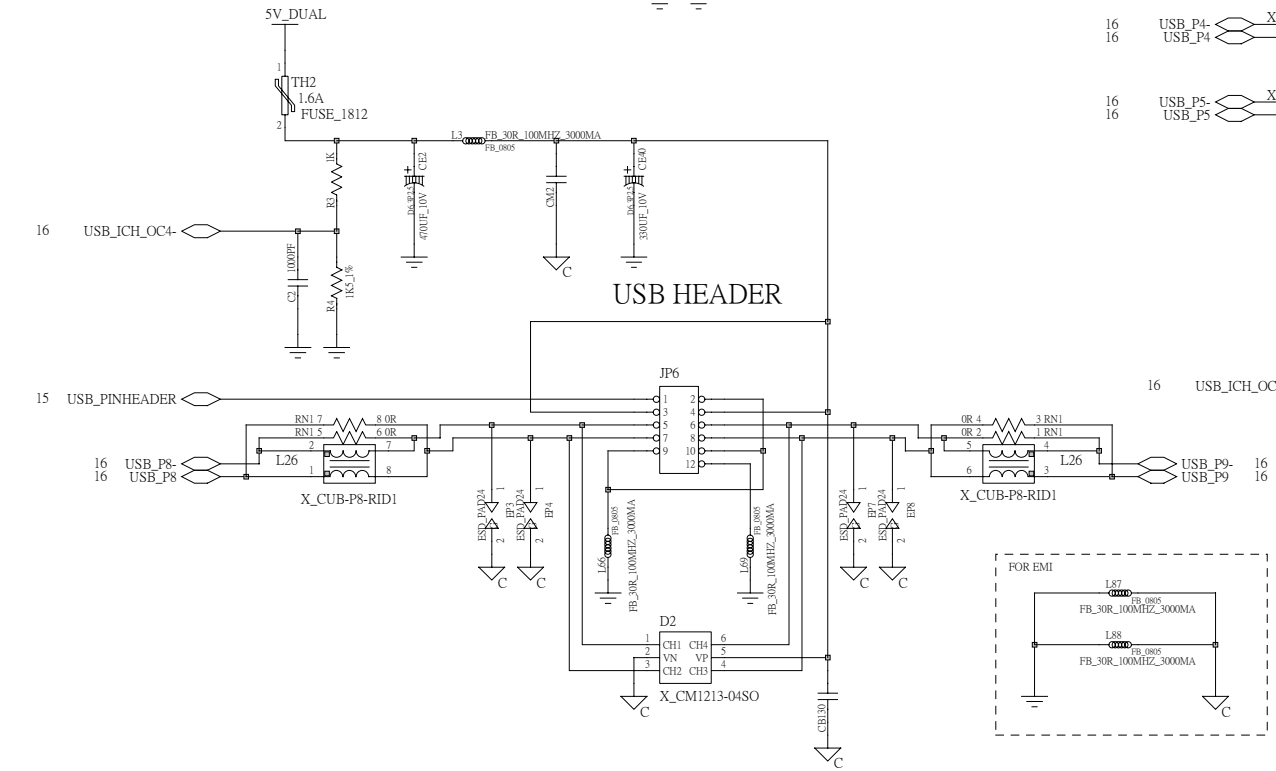

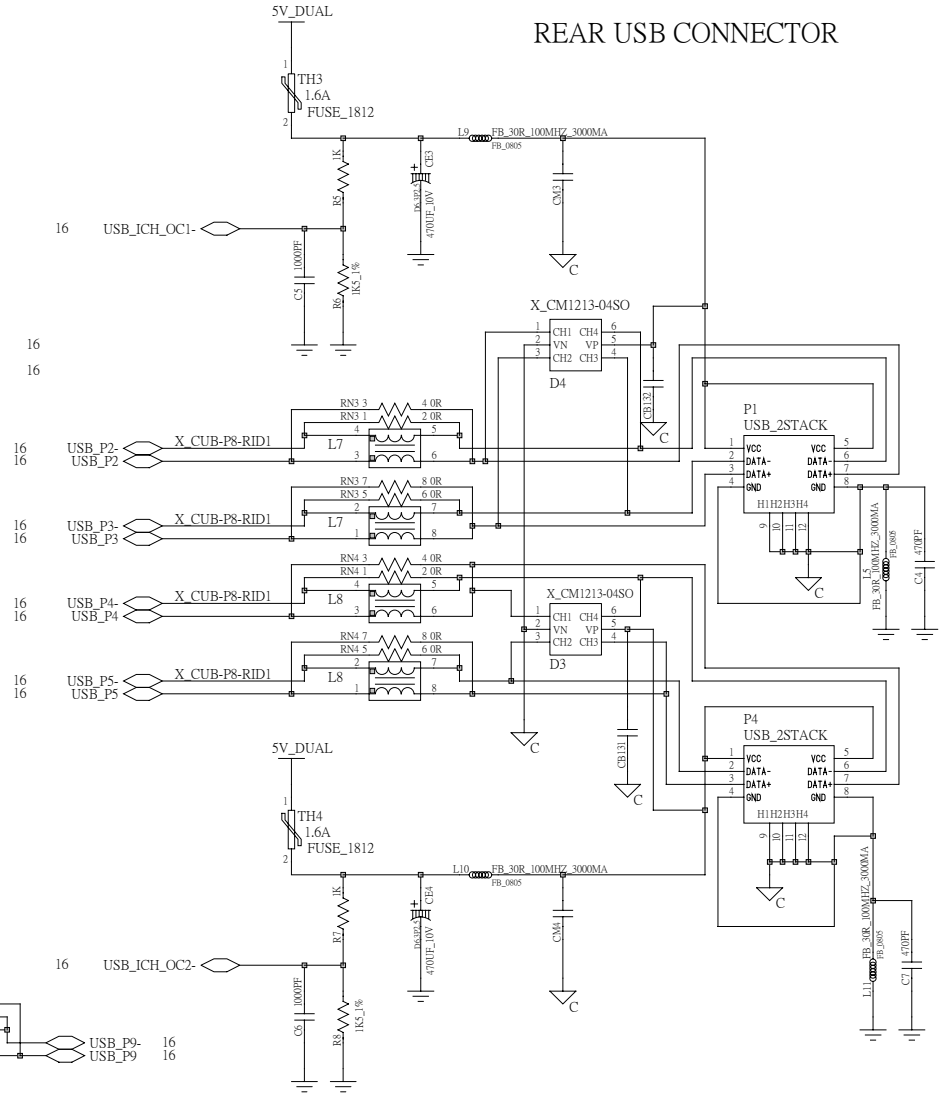

TITLE:	BRISTOL-GF Rear USBx6,Front USBx2	REV: 3.1
Document Number:	XXXXXXXX	
Prepared by:	MINGZ	
SIZE: A3	Date: 2006/06/06	PAGE: 22 OF 30

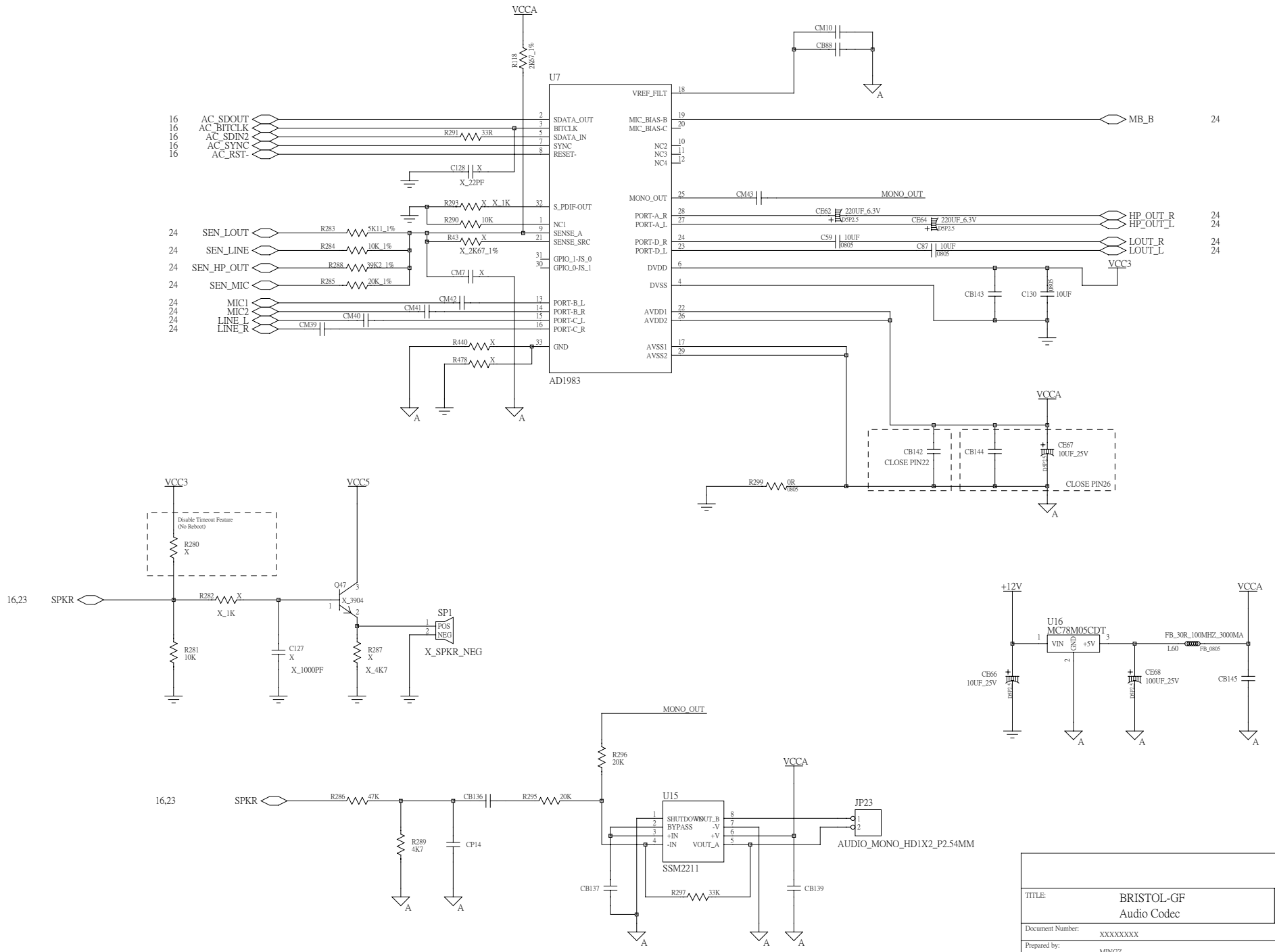

TITLE:	BRISTOL-GF Audio Codec	REV: 3.1
Document Number:	XXXXXXXX	
Prepared by:	MINGZ	
SIZE: A3	Date: 2006/06/06	PAGE: 23 OF 30

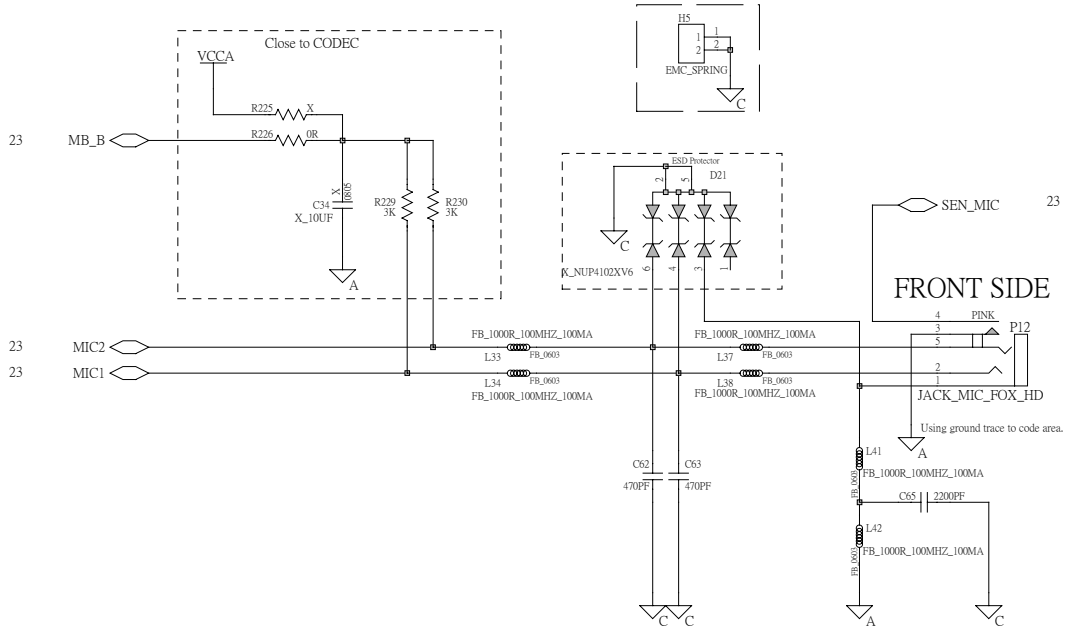

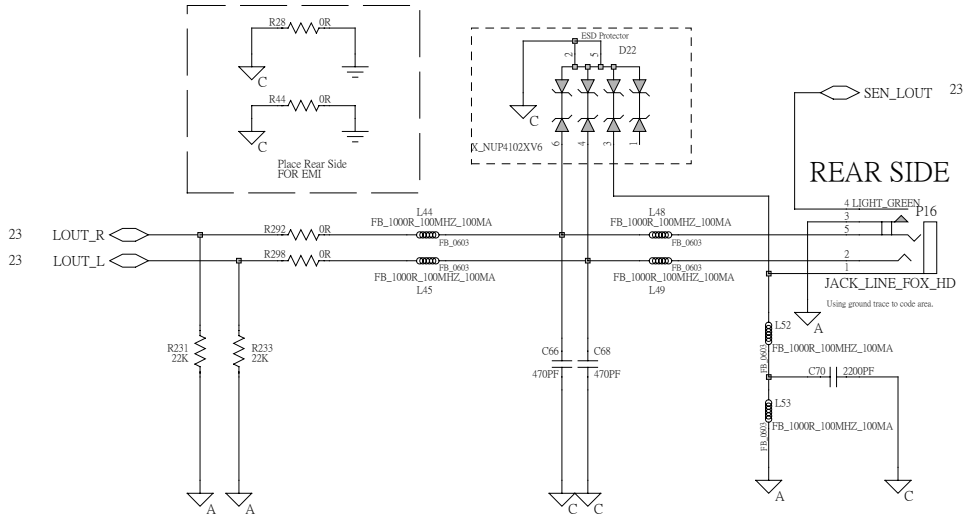

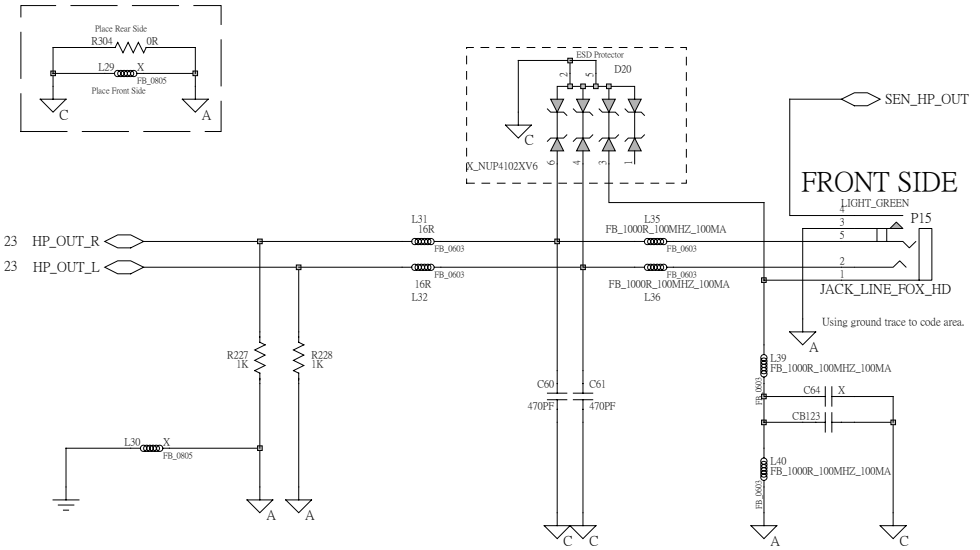

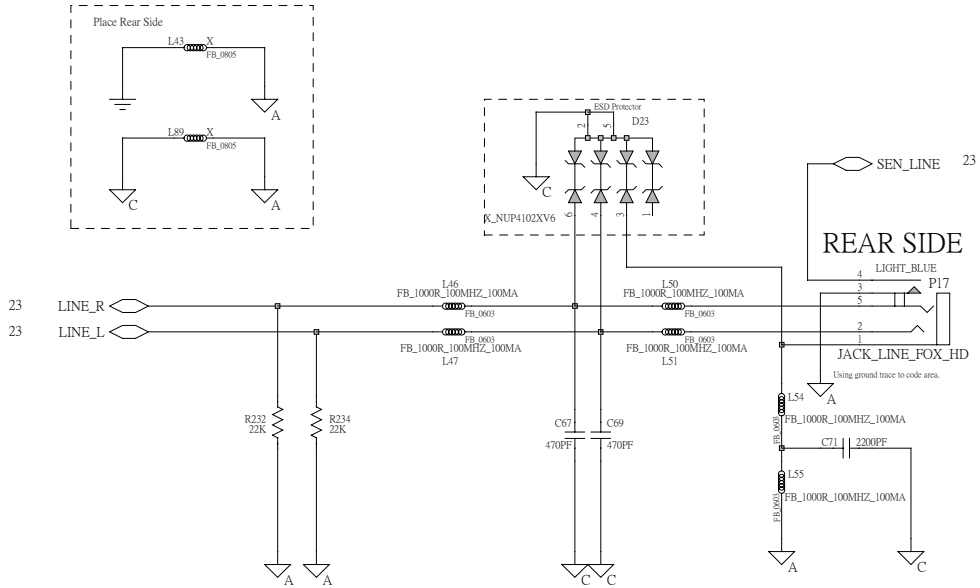

TITLE:	BRISTOL-GF Audio jacks	REV: 3.1
Document Number:	XXXXXXXX	
Prepared by:	MINGZ	
SIZE: A3	Date: 2006/06/06	PAGE: 24 OF 30

REAR USB CONNECTOR

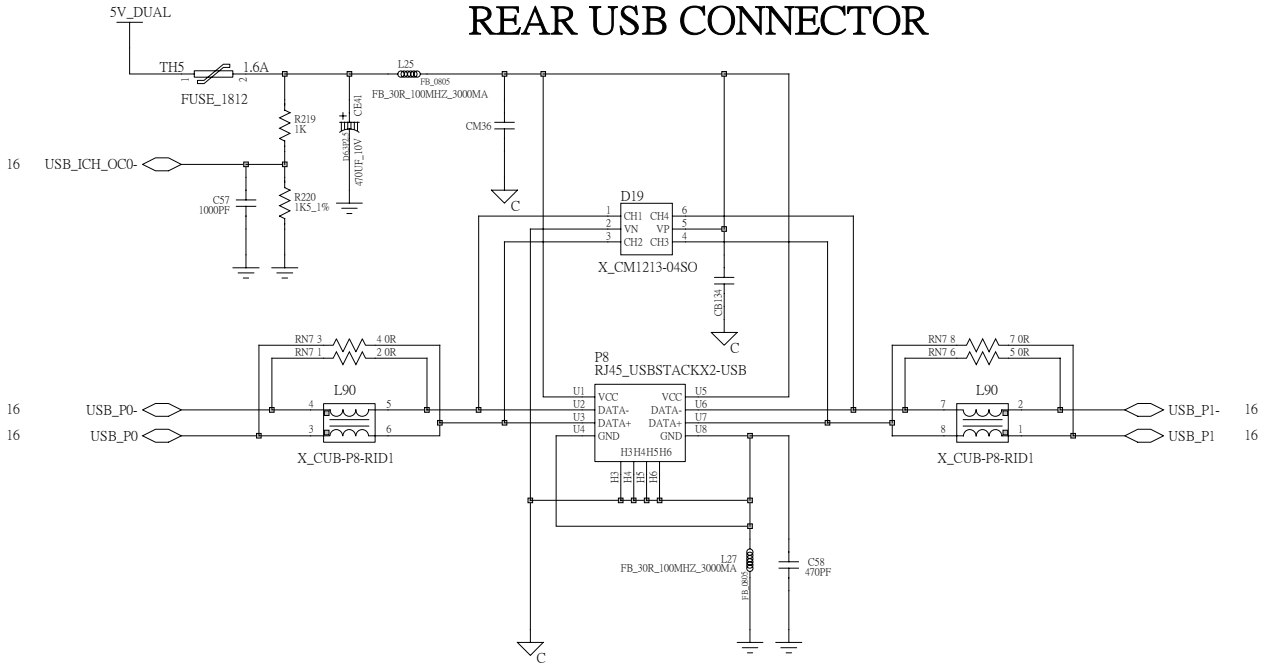

TPM

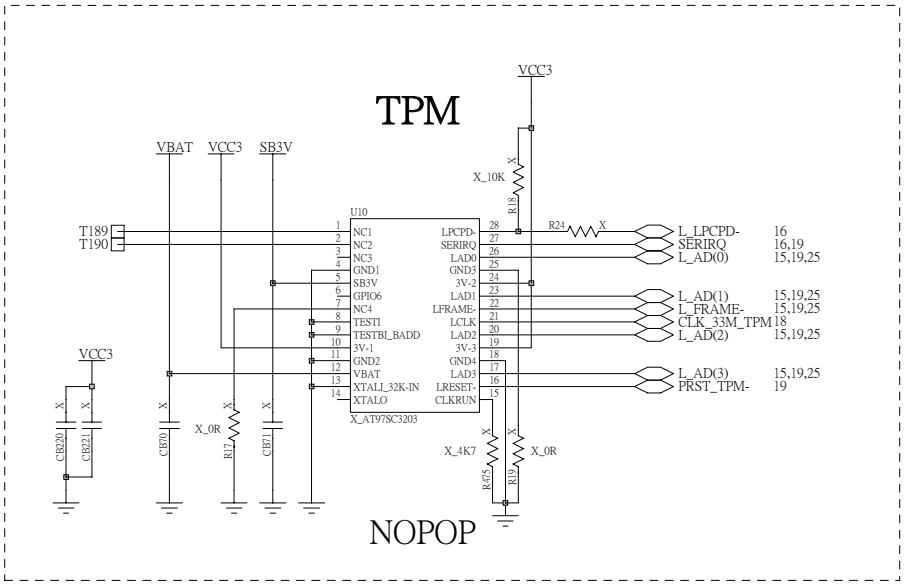

ASSET ID & TATER

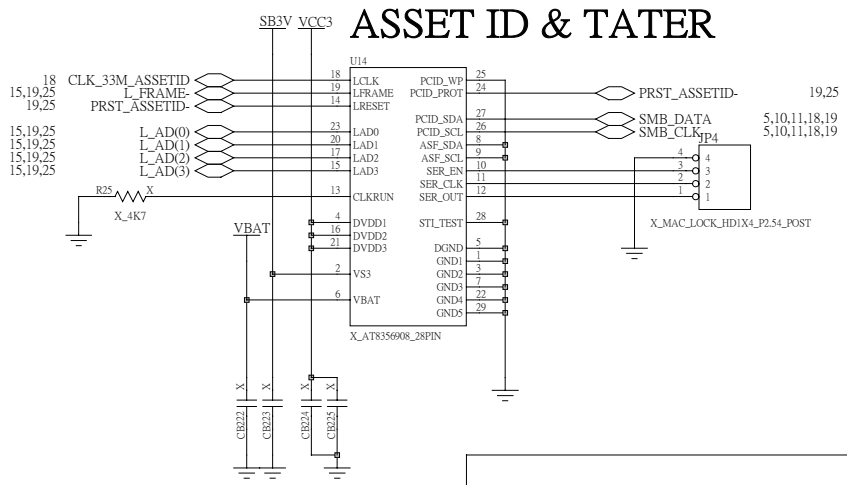

TITLE:	BRISTOL-GF Rear USBx2,TPM	REV: 3.1
Document Number:	XXXXXXXX	
Prepared by:	MINGZ	
SIZE: A3	Date: 2006/06/06	PAGE: 25 OF 30

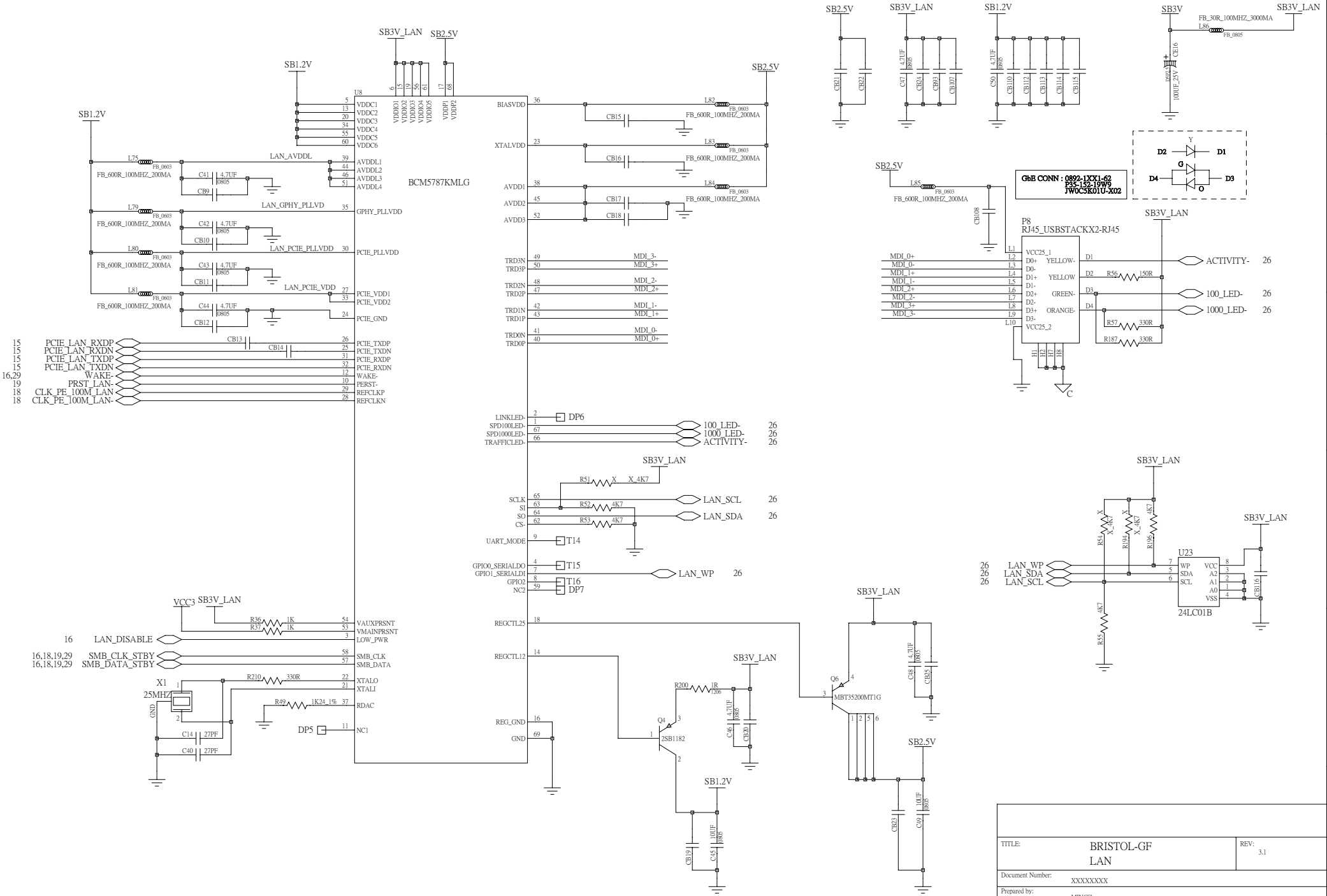

TITLE:	BRISTOL-GF LAN
REV:	3.1
Document Number:	XXXXXXXX
Prepared by:	MINGZ
SIZE:	A3
Date:	2006/06/06
PAGE:	26 OF 30

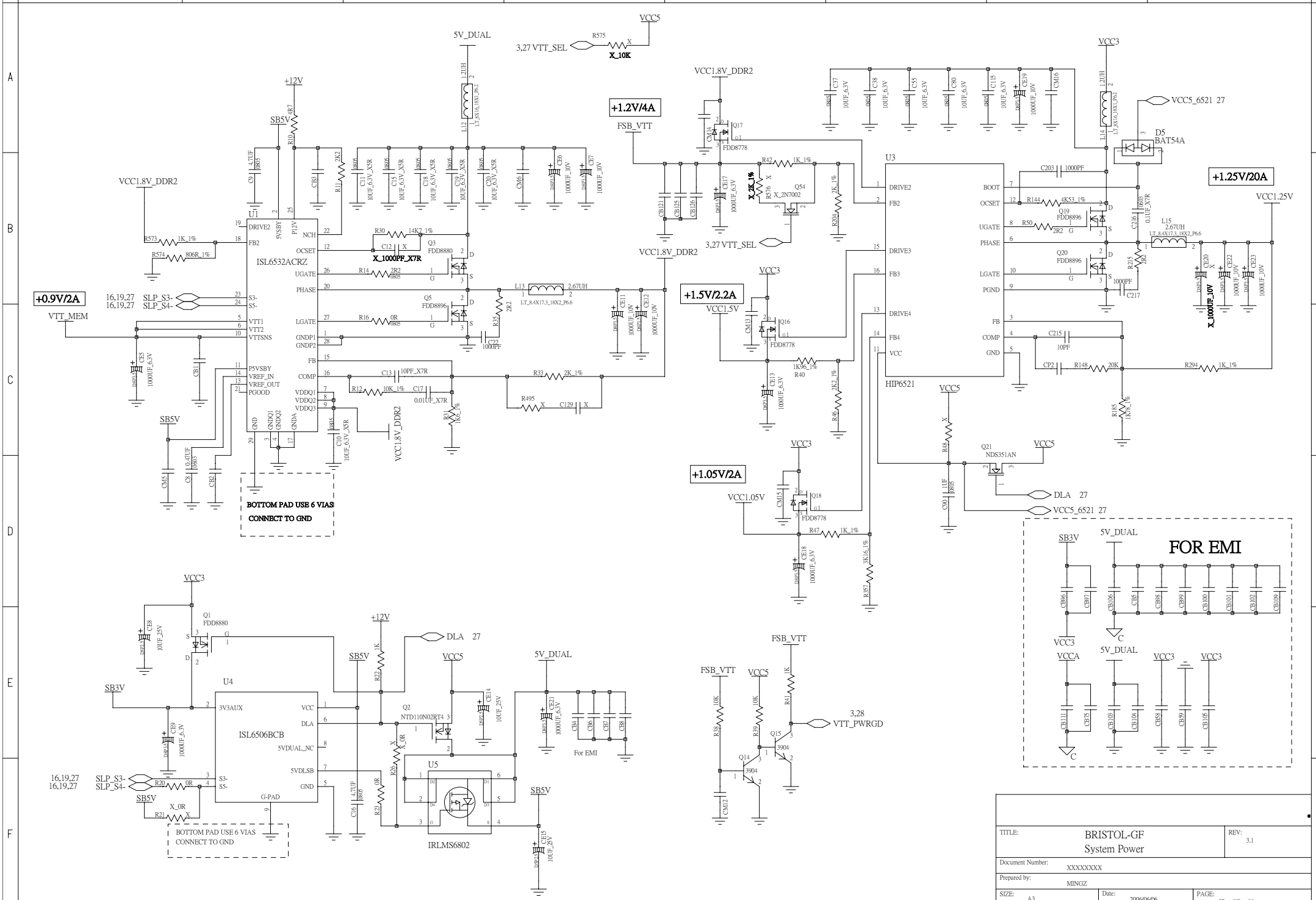

TITLE:	BRISTOL-GF System Power	REV: 3.1
Document Number:	XXXXXXXX	
Prepared by:	MINGZ	
SIZE: A3	Date: 2006/06/06	PAGE: 27 OF 30

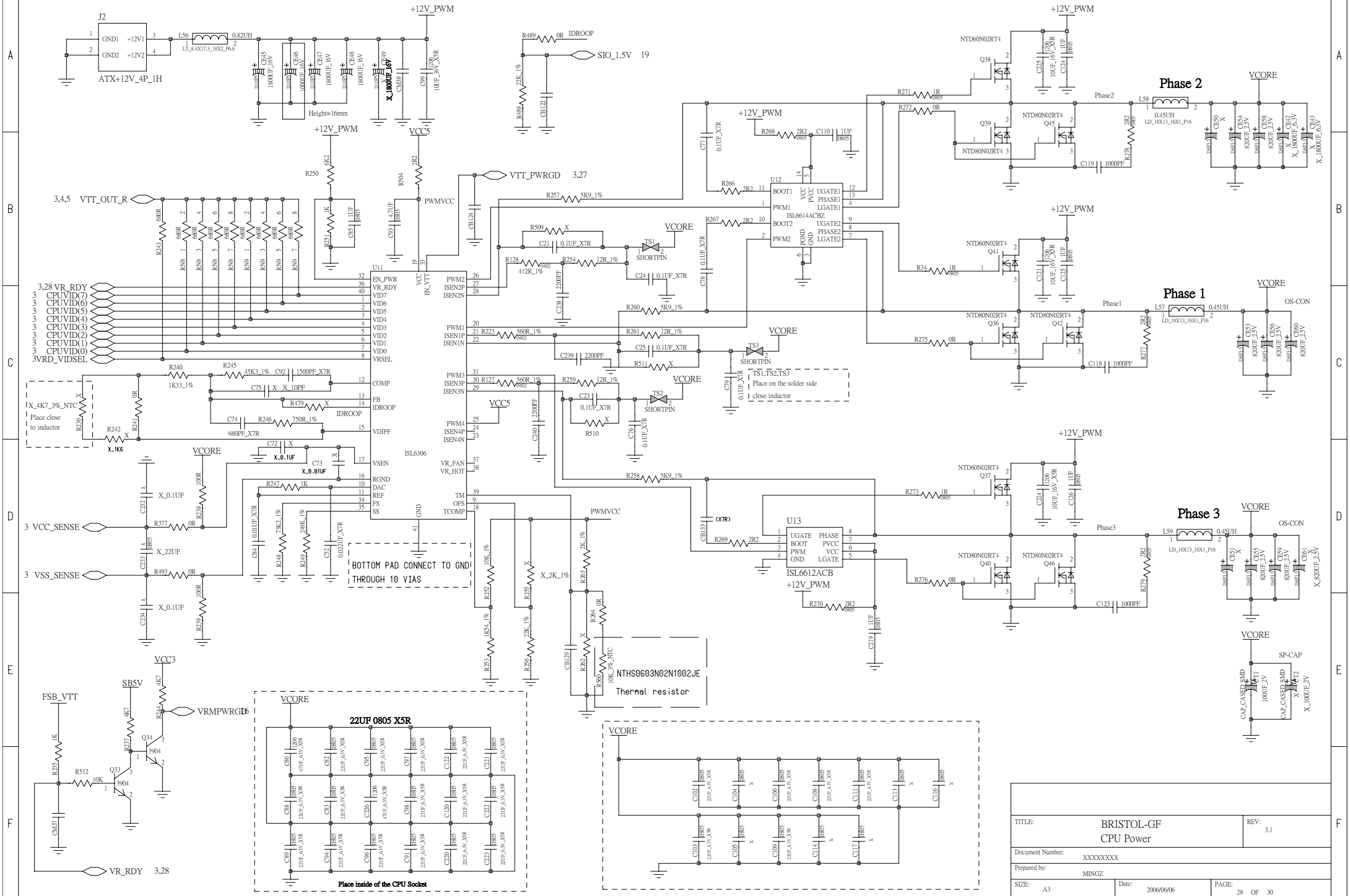
ATX+12V_4P_1H
Phase 1
Phase 2
Phase 3
ISL6306
ISL6614ACBZ
ISL6612ACB
BOTTOM PAD CONNECT TO GND THROUGH 10 VIAS
Place inside of the CPU Socket
Place close to inductor
Place on the solder side close inductor
NTHS0603N02N1002JE
Thermal resistor
22UF 0805 X5R
TITLE: BRISTOL-GF CPU Power
REV: 3.1
Document Number: XXXXXXXX
Prepared by: MINGZ
SIZE: A3
Date: 2006/06/06
PAGE: 28 OF 30

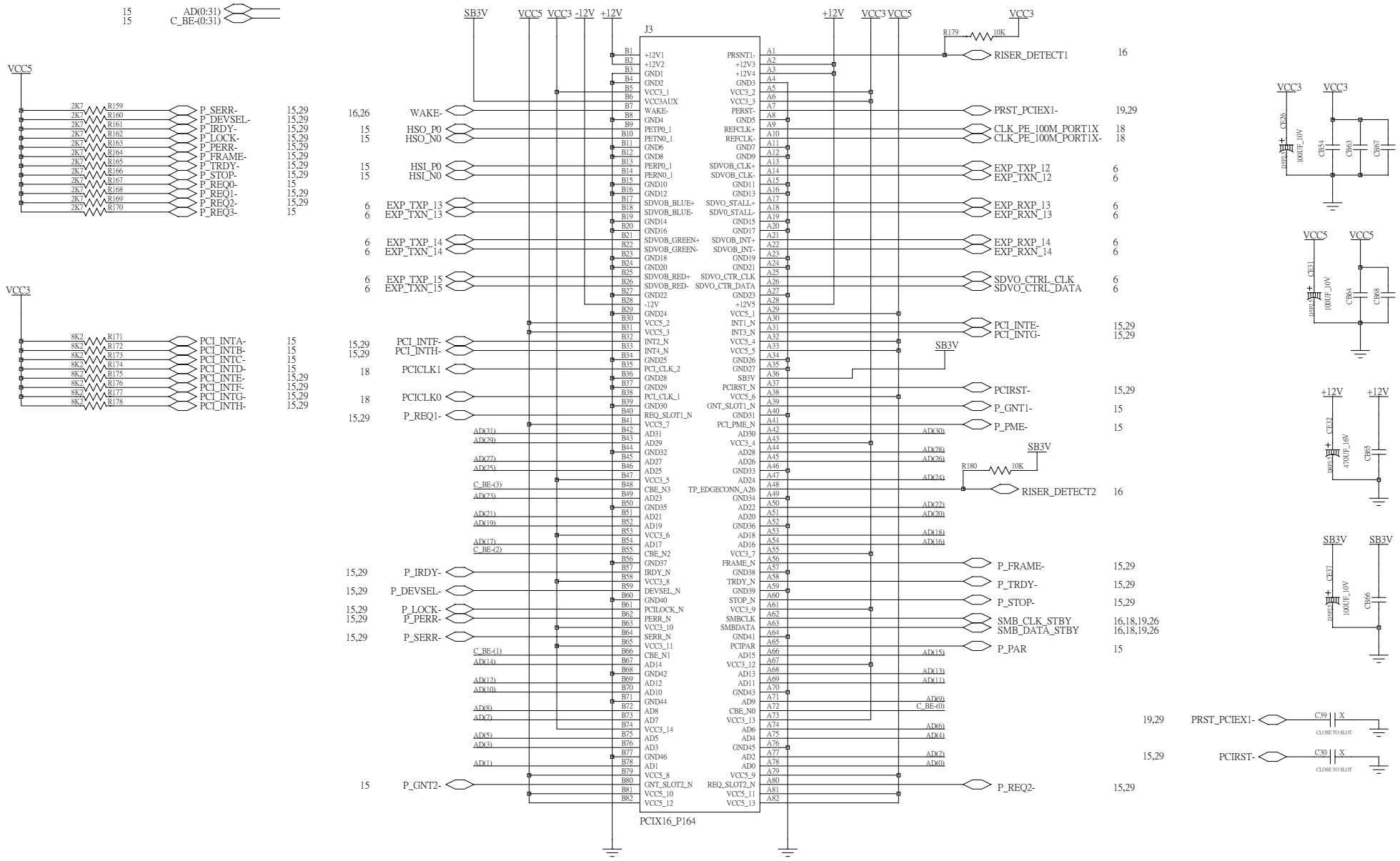

PCI SLOT(RISER), IDSEL_AD(25), PCICLK0, REQ2/GNT2/INT_F

TITLE:	BRISTOL-GF Riser Slot
REV:	3.1
Document Number:	XXXXXXXX
Prepared by:	MINGZ
SIZE:	A3
Date:	2006/06/06
PAGE:	29 OF 30

TITLE:	BRISTOL-GF HISTORY
REV:	3.1
Document Number:	XXXXXXXX
Prepared by:	MINGZ
SIZE:	A3
Date:	2006/06/06
PAGE:	30 OF 30