SIEMENS
NIXDORF

PC

System board with PCI Bus

PCD-5H

Technical Manual

The Intel Inside Logo is
a registered trademark
of Intel Corporation

PC

Published by
Siemens Nixdorf Informationssysteme AG
33094 Paderborn
81730 München

Order No.: *A26361-D818-Z120-1-7619*
Printed in the Federal Republic of Germany
AG 1293 12/93

A26361-D818-Z120-1-7619

Is there ...

... any technical problem or other question you need clarified?

Please contact:
- one of our IT Service Shops
- your sales partner
- your sales office

You will find the addresses of the IT Service Shops in the enclosed warranty coupon booklet.

... anything you want to tell us about this manual?
Please send us your comments quoting the order number of the manual.

Siemens Nixdorf Informationssysteme AG
User Documentation Department
BS2000 QM2, Otto-Hahn-Ring 6,
81730 München, Germany

Fax: (0 89) 6 36-4 04 43

This manual was produced using paper treated with chlorine-free bleach.

SIEMENS NIXDORF

System board with PCI Bus

Technical Manual

December 1993 edition

Introduction

Important notes

Settings and add-on modules

Interface assignment

Error messages

Index

Would you like to know more ...

... about this product
... or about another aspect of information technology?

Our Training Centers will be glad to help.
Siemens Nixdorf has Training Centers at strategic
locations in Germany and more than 20 countries worldwide.

Please write to:

Siemens Nixdorf
Area Training Management Europe North
125-135 Staines Road, Hounslow, Middlesex, TW3 3JB
United Kingdom

or call
Ron Johnson, Hounslow
Tel.: .44 344 850 990
Fax.: .44 344 850 991

Adaptec is a registered trademark of Adaptec Inc
Pentium is a registered trademark of Intel Corporation, USA.
Microsoft, MS and MS-DOS are registered trademarks and Windows is a trademark of Microsoft Corporation.
PS/2 is a registered trademark of International Business Machines, Inc.
UNIX is a registered trademark of UNIX System Laboratories.

Copyright © Siemens Nixdorf Informationssysteme AG 1993

The reproduction, transmission or use of this document or its contents is not permitted without express written authority.

Offenders will be liable for damages
All rights, including rights created by patent grant or registration of a utility model or design, are reserved.

Delivery subject to availability. Right of technical modification reserved.

Contents

Introduction **1**
Explanation of symbols 1
Features 2

Important notes **5**
Notes on software 6

Settings and add-on modules **7**
Settings in the setup menu 7
Settings using the STANDARD CMOS SETUP option 9
Settings using the ADVANCED CMOS SETUP option 11
Settings using the PERIPHERAL MANAGEMENT SETUP option 18
Settings using jumpers 21
Jumper J7A1 21
Recovering BIOS 22
BIOS update 22
Deleting CMOS RAM 22
Video mode 23
Invoking setup menu 23
Main memory 24
Installing a memory module 25
Removing a memory module 25

Interface assignment **27**
Connector J11H1 for power supply 27
Connector J3A1 for fan 27
Connector J1F1 for external loudspeaker 28
Connector J1G1 for indicator hard disk drive 28
Connector J1F3 for indicator system unit on 28
VESA feature connector J10A1 29

Error messages **31**
Beep codes 31
Error messages 32

Index **37**

Introduction

This description applies for the system board with PCI Bus (**P**eripheral **C**omponent **I**nterconnect) and the Pentium 60 MHz processor.

Explanation of symbols

The meanings of the symbols and fonts used in this manual are as follows:

⚠ Pay particular attention to texts marked with this symbol. Failure to observe this warning endangers your life, destroys the system, or may lead to loss of data.

i This symbol is followed by supplementary information, remarks and tips.

▶ Texts which follow this symbol describe activities that must be performed in the order shown.

␣ This symbol means that you must enter a blank space at this point.

↵ This symbol means that you must press the Enter key.

`Texts in this typeface` are screen outputs from the PC.

`Texts in this bold typeface` are the entries you make via the keyboard.

Texts in italics indicate commands or menu items.

"Quotation marks" indicate highlighted text and names of chapters.

Features

- 64-bit microprocessor Pentium 60MHz with integrated math coprocessor and 2*8 Kbyte internal cache memory (first level cache; 8 Kbyte data cache, 8 Kbyte address cache)
- Second level cache memory on the system board: 256 Kbyte
- Memory configuration on system board: 8 Mbyte to 128 Mbyte RAM onboard
- Video memory on the system board: 1 Mbyte
- Flash EPROM
- Real-time clock chip with battery and 128 Byte Setup memory in CMOS RAM
- Loudspeaker
- Floppy disk drive controller (up to 2.88 Mbyte format)
- Hard disk controller for IDE hard disk drives
- VGA controller
- Bus interface for platter with 4 ISA slots and 2 PCI slots
- Connector for IDE hard disk drive
- Connector for floppy disk drive
- Connector for external loudspeaker
- VESA feature connector
- Parallel interface
- Two serial interfaces
- PS/2 mouse interface
- PS/2 keyboard port
- Monitor interface

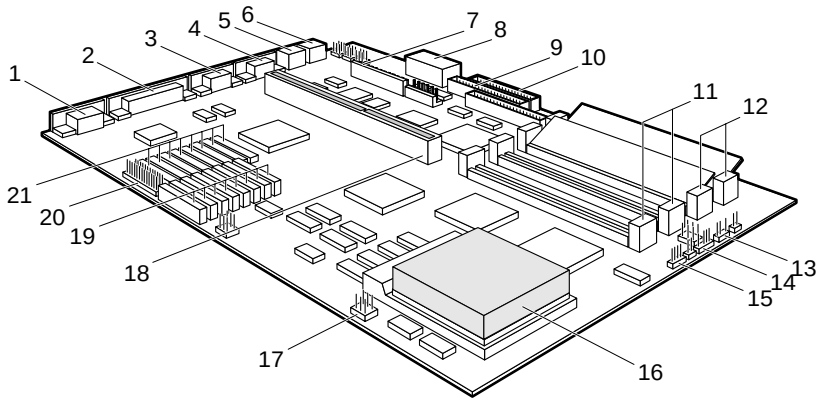

1 = Monitor interface
2 = Parallel interface
3 = Serial interface (Ser 2)
4 = Serial interface (Ser 1)
5 = PS/2 mouse interface (bus mouse)
6 = PS/2 keyboard port
7 = Connector J11H1 for power supply
8 = Real-time clock chip with lithium battery
9 = Connector J8J2 for standard IDE hard disk drive
10 = Connector J8J1 for floppy disk drive
11 = Sockets J4F1 and J4G1 for main memory (Bank 1)
12 = Sockets J4H1 and J4H2 for main memory (Bank 0)
13 = Connector J1G1 for indicator hard disk drive
14 = Connector J1F3 for indicator system unit on
15 = Connector J1F1 for external loudspeaker
16 = Processor with heat sink
17 = Connector J3A1 for fan
18 = Bus interface
19 = Video memory
20 = VESA feature connector J10A1
21 = Sockets for additional video memory

Possible screen resolution

The screen resolutions in the following table refer to the VGA controller on the system board.

If you are using an external CRT controller, you will find the possible screen resolution in the Operating Manual of the CRT controller.

Screen resolution	Refresh rate (Hz)	Horizontal-rate (kHz)	Max. number of colours
640x480	60	31,5	256
640x480	60	31,5	65536
640x480	60	31,5	16777216
640x480	72	37,7	256
640x480	72	37,7	65536
800x600	56	35,3	256
800x600	56	35,3	65536
800x600	60	37,8	256
800x600	60	37,8	65536
800x600	70	44,4	256
800x600	72	48,2	256
800x600	75	49,6	256
800x600	47,5 (interl.)	34	256
800x600	47,5 (interl.)	34	65536
1024x768	60	48,5	256
1024x768	66	54,5	256
1024x768	70	56,7	256
1024x768	72	58,5	256
1024x768	75	60,2	256
1024x768	43,5 (interl.)	35,4	256
1280x1024	43,5 (interl.)	49,9	16
*) 1280x1024	43,5 (interl.)	49,9	256
1280x1024	47,5 (interl.)	50,4	16
*) 1280x1024	47,5 (interl.)	50,4	256

*) Only with 2 Mbyte of video memory

The screen resolution depends on the connected monitor. How to set the screen resolution is described in the Operating Manual of the PC.

Important notes

Please note the information provided in the chapter "Safety" in the Operating Manual of the PC.

The real-time clock chip on the system board includes a lithium battery which may be replaced only by authorized personnel. Incorrect handling may lead to a risk of explosion.
The chip may be replaced only with an identical chip or with a type recommended by the manufacturer.
The chip must be disposed of in accordance with local regulations concerning special waste.

Be sure to read this page carefully and note the information before you open the PC.

Modules with **e**lectrostatic **s**ensitive **d**evices (ESD) may be identified by labels.

When you handle modules fitted with ESDs, you must observe the following points under all circumstances:

– When you handle modules fitted with ESDs, you must always discharge yourself (e.g. by touching a grounded object) before working.

– The equipment and tools you use must be free of static charges.

– Pull out the power plug before inserting or pulling out modules containing ESDs.

– Always hold modules with ESDs by their edges.

– Never touch pins or conductors on modules fitted with ESDs.

Notes on software

Program with time loops

Problems can occur with programs in which time loops have been implemented through software loops. This applies in particular to older programs which were written for 8 MHz processors.

SCO-UNIX on devices with Pentium processor

If you use the Pentium processor, the Adaptec-SCSI controller cannot be addressed under SCO-UNIX 3.2.4 and ODT 2.0.

To solve this problem, you can order from SCO a set of **SLS (Support Level Supplement) floppies** (consisting of 3 floppy disks) under the number **uod361**, free of charge, or contact SNI's spare parts service.

The problem no longer exists in the new releases of SCO-UNIX 3.2.4.2 and ODT 2.1.

There will be no support for older versions (SCO-UNIX versions lower than 3.2.4 and ODT versions lower than 2.0).

Settings and add-on modules

You can make settings in the setup menu or using the jumpers on the system board.

Settings in the setup menu

The setup menu displays settings and technical information on the PC configuration. The Operating Manual describes how to invoke the setup menu and change menu entries. Pressing the function key F1 provides help information on each entry field.

```
AMIBIOS SETUP PROGRAM - BIOS SETUP UTILITIES
(C)1992   American Megatrends Inc.,   All Rights Reserved

                STANDARD CMOS SETUP
                ADVANCED CMOS SETUP
                PERIPHERAL MANAGEMENT SETUP
                CONFIGURE WITH BIOS DEFAULTS
                CONFIGURE WITH POWER-ON DEFAULTS
                CHANGE PASSWORD
                WRITE TO CMOS AND EXIT
                DO NOT WRITE TO CMOS AND EXIT

Standard CMOS Setup for Changing Time, Date, Hard Disk Type, etc.

ESC:Exit   ↓→↑← : Sel   F2/F3:Color   F10:Save & Exit
```

Example of a first screen page of the setup menu

The setup menu provides eight items. The first three offer a variety of setting options that are described below.

STANDARD CMOS SETUP

This option enables you to make the following basic settings:
- Date and time on your PC
- Floppy disk drives
- Hard disk drives
- Keyboard

ADVANCED CMOS SETUP

This option enables you to set the following functions:
- Key repeat function
- Message "`Press <F1> Key if you want to run Setup`"
- Num Lock function
- Loading the operating system
- Cache memory
- Prompting for network password
- ISA Linear Frame Buffer
- Shadowing function
- Base memory
- IDE-DMA transfer
- IDE Multiple Sector Mode
- ISA bus timing
- Interrupts IRQ9, IRQ10 and IRQ11

PERIPHERAL MANAGEMENT SETUP

This option enables you to set the following peripherals:
- Floppy disk drive controller
- Hard disk drive controller
- Addresses of the serial ports
- Addresses of the parallel ports
- Interrupt status
- Parallel port mode

CONFIGURE WITH BIOS DEFAULTS

This option enables you to set all settings of the setup menu to default values (ROM).

CONFIGURE WITH POWER-ON DEFAULTS

This option enables you to set all settings of the setup menu to default values, by means of which it is always possible to start the PC.

CHANGE PASSWORD

This option enables you to assign, change or delete a password (see Operating Manual of the PC).

WRITE TO CMOS AND EXIT

This option saves the settings you have made to CMOS RAM and exits the setup menu.

DO NOT WRITE TO CMOS AND EXIT

This option exits the setup menu without saving the settings you have made.

Settings using the STANDARD CMOS SETUP option

Date
Time

The field for Date contains the current date, and the field for Time contains the current time of the PC. If you change the date or time, you must use the formats *mm/dd/yy* (month/day/year) and *hh/mm/ss* (hours/minutes/seconds) respectively.

⚠ If the fields for *Date* and *Time* show the wrong values after switching the PC off and back on, then the battery is empty. Please contact the service department.

Floppy Drive A:
Floppy Drive B:

Both fields show the type of floppy disk drives installed.

Possible entries: *360K*, *1.2M*, *720K*, *1.44M*, *2.88M* and *NOT INSTALLED*.

Default entry for *Floppy Drive A*: *1.44M*
Default entry for *Floppy Drive B*: *NOT INSTALLED*

Drive C: Type
Drive D: Type
Drive E: Type
Drive F: Type

These fields show the type of hard disk drives installed. The values for *Drive C: Type* are valid for the default hard disk drive.

Possible entries:

AUTO-CONFIG
The BIOS checks the installed hard disk drive and, in the case of IDE hard disk drives, automatically configures the values for *Cyln*, *Head*, *Sect* and *Size*.

USER TYPE 1
You are responsible for entering the values for *Cyln*, *Head*, *Sect* and *Size* yourself if the BIOS does not recognize the installed hard disk drive (e.g. SCSI or ESDI hard disk drives).

USER TYPE 2
Same as *USER TYPE 1*.

i It is not possible to load the operating system if the wrong hard disk type is entered. In this case an MS-DOS message indicating that the operating system is missing is displayed.

Default entry for C: *USER TYPE 1*
Default entry for D: to F: *AUTO-CONFIG*

Drive C: Timeout
Drive D: Timeout
Drive E: Timeout
Drive F: Timeout

In this field you specify the time allowed for the BIOS to detect the installed hard disk drive for automatic configuration. An error message is displayed if the BIOS exceeds this time. The values for *Drive C: Timeout* are valid for the default hard disk drive.

Possible entries: *0*, *5*, *15*, *31 seconds*

Default entry: *5 seconds*

Keyboard

In this field you indicate whether you have attached a keyboard.

Possible entries:

Installed
A keyboard is attached.

Not Installed
No keyboard is attached.

Default entry: *Installed*

Base Memory

This field indicates the size of the available base memory below 1 Mbyte.

Extended Memory

This field indicates the size of the memory above 1 Mbyte.

Settings using the ADVANCED CMOS SETUP option

Typematic Rate Programming

This field allows you to enable or disable the *Typematic Rate Delay* and *Typematic Rate* fields.

Possible entries:

Enabled
You can make settings in the fields *Typematic Rate Delay* and *Typematic Rate*.

Disabled
You cannot make settings in the fields *Typematic Rate Delay* and *Typematic Rate*.

Default entry: *Disabled*

Typematic Rate Delay

The *Typematic Rate Programming* field must indicate *Enabled*.
In this field you can specify the time, in milliseconds, after which the key repeat function takes effect. Key repeat means that a key is repeated for as long as the key is held down.

Possible entries: *250*, *500*, *750 or 1000* (milliseconds)

Default entry: *500*

Typematic Rate

The *Typematic Rate Programming* field must indicate *Enabled*.
In this field you can specify how often the key character is repeated in a second if the key is held down.

Possible entries: *30, 24, 20, 15, 12, 10, 8* or *6* (characters/second)

Default entry: *15*

Press <F1> Message Display

This field enables you to specify whether your PC is to display the message `Press <F1> Key if you want to run Setup` when the system is booted.

Possible entries:

Enabled
The message `Press <F1> Key if you want to run Setup` is displayed.

Disabled
The message `Press <F1> Key if you want to run Setup` is not displayed.

Default entry: *Enabled*

System Boot UP Num Lock

This field enables you to specify whether the lowercase level or uppercase level of the numeric keypad is active when the system is booted.
Possible entries:

On
The uppercase level, i.e. the digit and comma keys, is active.

Off
The lowercase level is active, i.e. on the numeric keypad the lower characters of double-labeled keys are valid.

Default entry: *On*

System Boot UP Sequence

This field enables you to specify from which drive the operating system is to be booted.
Possible entries:

A:, C:
When the system is booted, the BIOS attempts to start the operating system from drive A:. If it does not find the operating system there, it loads the operating system from drive C:.

C:, A:
When the system is booted, the BIOS attempts to start the operating system from drive C:. If it does not find the operating system there, it loads the operating system from drive A:.

C:
When the system is booted, the BIOS starts the operating system from drive C:. It is not possible to load the operating system from drive A:.

Default entry: *A:, C:*

System Boot UP CPU Speed

This field enables you to set the CPU speed.
Possible entries: *High* (60 MHz) or *Low* (8 MHz)

Default entry: *High*

Cache Memory

In this field you can specify whether a part of the main memory is mapped to the very fast cache memory (SRAM). This results in faster program execution and faster data access operations.

Possible entries:

Enabled
The function is enabled.
The first-level cache memory (in the CPU) and the second-level cache memory (on the system board) are used.

Disabled
The function is disabled.
Neither the first-level cache memory nor the second-level cache memory can be used.

i You must disable the function if the access time for application programs is too short.

Default entry: *Enabled*

Network Password Checking

This field applies only if you have assigned a password.
You use it to set the effect of a password.

Possible entries:

Disabled
You are prompted to enter a password before the operating system is started. The operating system is started once you have entered the correct password.

Enabled
The keyboard is locked after the operating system is started. The keyboard is released once you have entered the correct password.

Default entry: *Disabled*

ISA Linear Frame Buffer

This field enables you to make available a linear frame buffer for an external ISA graphics controller. Performance is enhanced if the external ISA graphics controller can use a linear frame buffer.

Possible entries: *1MB*, *2MB*, *4MB* or *Disabled*

Default entry: *Disabled*

Set Linear Frame Buffer to

This field shows the address of the linear frame buffer if the field *ISA Linear Frame Buffer* contains a value.
If the field *ISA Linear Frame Buffer* contains the entry *Disabled*, this field contains *N/A* (not applicable).

Disable Shadow Memory Size

If your PC contains an ISA expansion board, it may be necessary that a memory area is not copied to shadow RAM. The size and location of this memory area depends on the ISA expansion board.

This field enables you to specify the size of the memory area (max. 64 Kbytes) not to be copied into fast shadow RAM. The area must lie within the addresses C0000H and DFFFFH.

Possible entries:

Disabled
The entire memory area (C0000H to DFFFFH) is copied into fast shadow RAM.

16KB, *32KB*, *48KB* or *64KB*
This entry specifies the size of the memory area that is not to be copied into fast shadow RAM.
You must specify the location of the memory area (base address) in the field *Disable Shadow Memory Base*.

Default entry: *Disabled*

Disable Shadow Memory Base

This field is not applicable if the field *Disable Shadow Memory Size* contains the entry Disabled.

This field enables you to specify the base address of the memory area that is not to be copied into fast shadow RAM.

Possible entries: *C0000H*, *C4000H*, *C8000H*, *CC000H*, *D0000H*, *D4000H*, *D8000H* or *DC000H*

Default entry: *C0000H*

Base Memory Size

This field enables you to set the size of the base memory (below 1 Mbyte).

Possible entries: *640 KB* or *512 KB*

Default entry: *640 KB*

IDE DMA Transfer Mode

This entry enables you to set the IDE-DMA transfer mode for your IDE hard disk drive.
The IDE-DMA transfer mode actually used depends on the installed IDE hard disk drive.

Possible entries:

Standard
Compatible with DMA transfer mode.

Type B
ISA-DMA transfer mode.

Type F
The fastest IDE-DMA transfer mode. The optimum values are used for the installed IDE hard disk drive.

Disabled
The function is disabled.

Default entry: *Type F*

IDE Multiple Sector Mode

This field enables you to specify how many sectors are transferred during each hard disk access.
The actual number of transferred sectors per access depends on the installed IDE hard disk drive. The entry *64 S/B* automatically sets the optimum values for the installed IDE hard disk drive.

Possible entries: *1, 2, 4, 8, 16, 32* or *64 S/B* (sectors/access operation)

Default entry: *64 S/B*

Enhanced ISA Timing

This field enables you to set the timing of the ISA bus.

Possible entries:

Enabled
The timing of the ISA bus is 10 MHz.

Disabled
The timing of the ISA bus is 8 MHz.

Default entry: *Disabled*

ISA IRQ9
ISA IRQ10
ISA IRQ11

You must enter *Used* in the Interrupt field if one of the three interrupts is used by an installed ISA board.

Possible entries:

Used
The interrupt is used by an ISA board.

Free
The interrupt is available for automatic PCI configuration.

Default entry: *Free*

Settings using the PERIPHERAL MANAGEMENT SETUP option

Programming Option

This field enables you to specify whether the peripherals (controlled by the I/O controller) are configured automatically or manually.

Possible entries:

Auto
Peripheral devices are detected and configured automatically. The fields that follow are not applicable.

Manual
The peripheral devices must be set manually using the fields that follow.

Default entry: *Auto*

On-Board Floppy Drive

Any entry in this field is not applicable if the *Programming Option* field contains the entry *Auto*.
This field allows you to enable or disable the floppy drive controller on the system board.

Possible entries:

Enabled
The floppy drive controller is enabled.

Disabled
The floppy drive controller is disabled.

Default entry: *Enabled*

On-Board IDE Drive

Any entry in this field is not applicable if the *Programming Option* field contains the entry *Auto*.
This field allows you to enable or disable the hard disk drive controller on the system board.

Possible entries:

Enabled
The hard disk drive controller is enabled.

Disabled
The hard disk drive controller is disabled.

Default entry: *Enabled*

First Serial Port Address
Second Serial Port Address

Any entry in this field is not applicable if the *Programming Option* field contains the entry *Auto*.
This field enables you to set the first and second serial port.

Possible entries:

3F8H
The serial port is set to the address 3F8H and to IRQ4.

3E8H
The serial port is set to the address 3E8h and to IRQ4.

2F8H
The serial port is set to the address 2F8H and to IRQ3.

2E8H
The serial port is set to the address 2E8H and to IRQ3.

DISABLED
The serial port is disabled.

Default entry: *3F8H*

Parallel Port Address

Any entry in this field is not applicable if the *Programming Option* field contains the entry *Auto*.
This field enables you to set the parallel port.

Possible entries:

378H
The parallel port is set to the address 378H and to IRQ7.

278H
The parallel port is set to the address 278H and to IRQ5.

3BCH
The parallel port is set to the address 3BCH and to IRQ7.

DISABLED
The parallel port is disabled.

Default entry: *378H*

IRQ active State

This field enables you to specify whether the interrupt signals are high or low.

Possible entries: *High* or *Low*

Default entry: *High*

Parallel Port Mode

Any entry in this field is not applicable if the *Programming Option* field contains the entry *Auto*.
This field enables you to set the transfer mode for the parallel port. The parallel port supports extended transfer in accordance with EPP and fast transfer in accordance with EPP.

Possible entries:

Normal
The parallel port can send only.

Extended
The parallel port can send and receive.

Default entry: *Normal*

Settings using jumpers

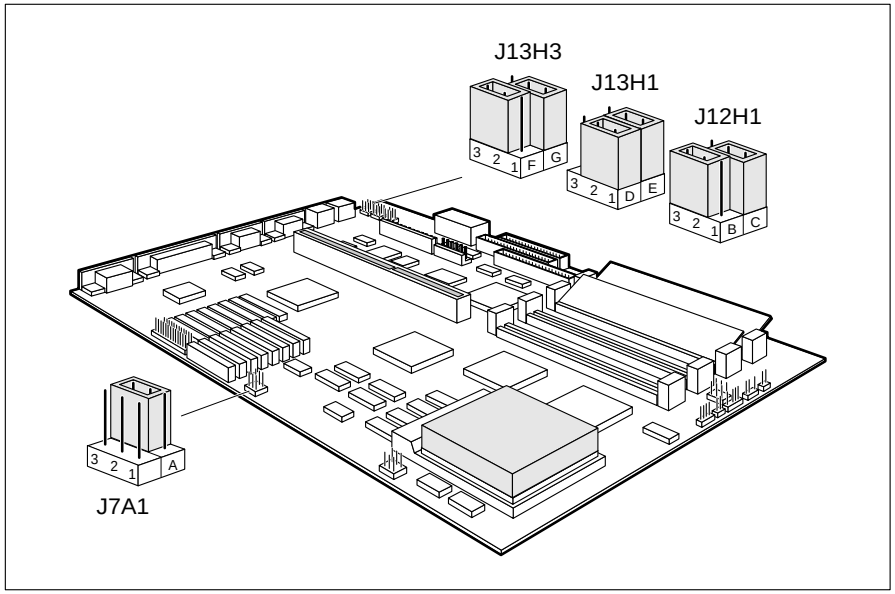

J7A1 = may not be changed
J12H1 = jumper for Flash BIOS
J13H1 = jumper for CMOS RAM

J13H3 = jumper for Video mode and setup menu

Jumper J7A1

The setting of jumper J7A1 may not be changed.

Recovering BIOS

Using jumper J12H1-B you can recover the BIOS after an errored BIOS update. To do so, you need a recovery diskette (please contact the service department).

If you enable recovery, BIOS starts from drive A: and restores the BIOS in the EEPROM.

BIOS recovery = Jumper J12H1-B set to 1-2
Normal operation = Jumper J12H1-B set to 2-3

Default setting:
Jumper J12H1-B set to 2-3 = Normal operation

BIOS update

Using jumper J12H1-C you can enable or disable BIOS updating.
If you enable updating, the BIOS in EEPROM can be overwritten.

BIOS update not possible = Jumper J12H1-C set to 1-2
BIOS update possible = Jumper J12H1-C set to 2-3

Default setting:
Jumper J12H1-C set to 1-2 = BIOS update not possible

Deleting CMOS RAM

Using jumper J13H1-D you can delete the CMOS RAM. If you delete CMOS RAM, the setup menu contains default entries.

Normal operation = Jumper J13H1-D set to 1-2
Delete CMOS RAM = Jumper J13H1-D set to 2-3

Default setting:
Jumper J13H1-D set to 1-2 = Normal operation

Video mode

Using jumper J13H3-F you can set the video mode for the screen controller.

Monochrome display = Jumper J13H3-F set to 1-2
Color display = Jumper J13H3-F set to 2-3

Default setting:
Jumper J13H3-F set to 2-3 = Color display

Invoking setup menu

Using jumper J13H3-G you can enable or disable invocation of the setup menu.

Setup menu invocation is possible = Jumper J13H3-G set to 1-2
Setup menu invocation not possible = Jumper J13H3-G set to 2-3

Default setting:
Jumper J13H3-G set to 1-2 = Setup menu invocation is possible

Main memory

Four locations (J4H1 and J4H2 = Bank 0; J4F1 and J4G1 = Bank 1) are available on the system board for connecting memory modules.

You may only use quick memory modules (Access time = 70 nsec or less)!

Only the upgrade levels and slots listed in the table are permissible for the memory configuration.

Memory configuration	memory modules in Bank 0	memory modules in Bank 1
8 Mbyte	2 of 4 Mbyte	----
10 Mbyte	2 of 1 Mbyte	2 of 4 Mbyte
12 Mbyte	2 of 2 Mbyte	2 of 4 Mbyte
16 Mbyte	2 of 4 Mbyte	2 of 4 Mbyte
16 Mbyte	2 of 8 Mbyte	----
18 Mbyte	2 of 1 Mbyte	2 of 8 Mbyte
20 Mbyte	2 of 2 Mbyte	2 of 8 Mbyte
24 Mbyte	2 of 4 Mbyte	2 of 8 Mbyte
32 Mbyte	2 of 8 Mbyte	2 of 8 Mbyte
32 Mbyte	2 of 16 Mbyte	----
34 Mbyte	2 of 1 Mbyte	2 of 16 Mbyte
36 Mbyte	2 of 2 Mbyte	2 of 16 Mbyte
40 Mbyte	2 of 4 Mbyte	2 of 16 Mbyte
48 Mbyte	2 of 8 Mbyte	2 of 16 Mbyte
64 Mbyte	2 of 16 Mbyte	2 of 16 Mbyte
64 Mbyte	2 of 32 Mbyte	----
66 Mbyte	2 of 1 Mbyte	2 of 32 Mbyte
68 Mbyte	2 of 2 Mbyte	2 of 32 Mbyte
72 Mbyte	2 of 4 Mbyte	2 of 32 Mbyte
80 Mbyte	2 of 8 Mbyte	2 of 32 Mbyte
96 Mbyte	2 of 16 Mbyte	2 of 32 Mbyte
128 Mbyte	2 of 32 Mbyte	2 of 32 Mbyte

X150 = Bank 0; X151 = Bank 1; X152 = Bank 2; X153 = Bank 3;

Installing a memory module

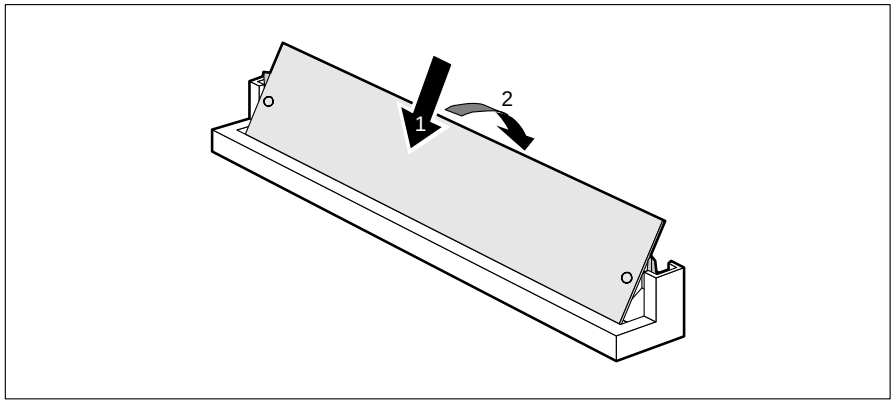

- Insert the memory module at an angle into the appropriate slot (1).
  Ensure that the two holes in the memory module line up with the holding pins.
- Tilt the module back until it snaps into place (2).

Removing a memory module

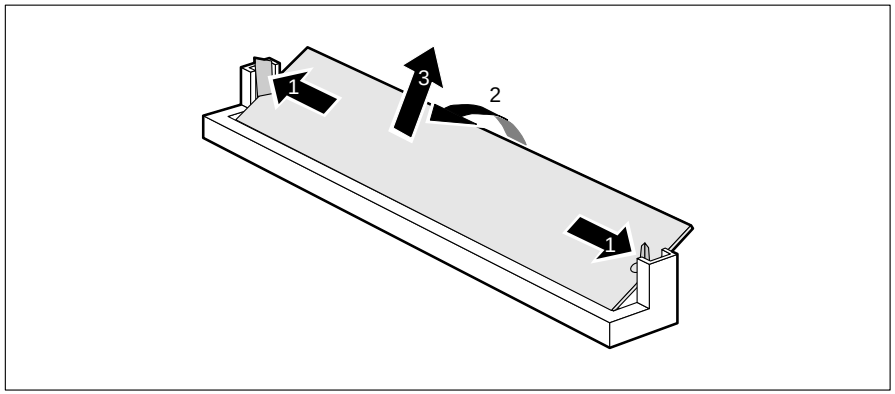

- Force the plastic holders carefully outward at left and right (1).
- Tilt the module forward (2) and pull the module off upward (3).

Interface assignment

The assignment of the standard interfaces is described in the technical manual of the PC (section "Technical data").

Connector J11H1 for power supply

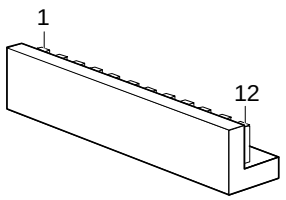

Pin	Meaning
1	Power Good
2	+5V
3	+12 V
4	-12 V
5	0 V
6	0 V
7	0 V
8	0 V
9	-5 V
10	+5 V
11	+5 V
12	+5 V

Connector J3A1 for fan

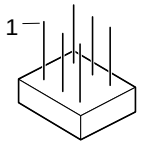

Pin	Meaning
1	0 V
2	+12 V
3	0 V
4	0 V
5	+12 V
6	0 V

Connector J1F1 for external loudspeaker

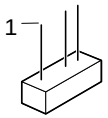

Pin	Meaning
1	data loudspeaker
2	coded
3	not used
4	+5 V

Connector J1G1 for indicator hard disk drive

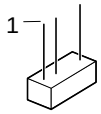

Pin	Signal name
1	+5 V
2	hard disk drive
3	coded
4	+5 V

Connector J1F3 for indicator system unit on

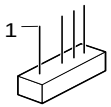

Pin	Signal name
1	system unit on
2	coded
3	0 V
4	not used
5	0 V

VESA feature connector J10A1

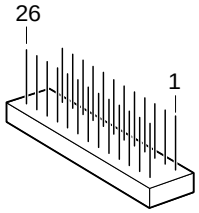

Pin	Meaning
1	0 V
2	Data 0
3	0 V
4	Data 1
5	0 V
6	Data 2
7	Select video
8	Data 3
9	Select synchronization
10	Data 4
11	Select DAC
12	Data 5
13	not used

Pin	Meaning
14	Data 6
15	0 V
16	Data 7
17	0 V
18	Clock
19	0 V
20	Blinking
21	0 V
22	Horizontal sync.
23	not used
24	Vertical Sync.
25	coded
26	0 V

Error messages

This chapter contains the error messages generated by the system board.

If the following error messages are displayed repeatedly, contact your customer field service.

Beep codes

1 beep
The memory refresh circuitry on the system board is faulty.

2 beeps
Parity error in the first 64 Kbyte of memory.

3 beeps
Memory failure in the first 64 Kbyte of memory.

4 beeps
Memory failure in the first 64 Kbyte of memory or Timer 1 on the system board is faulty.

5 beeps
The CPU on the system board generated an error.

6 beeps
The keyboard controller (8042) is faulty.

7 beeps
The CPU on the system board generated an exception interrupt.

8 beeps
The system CRT controller is missing or its memory is faulty.

9 beeps
ROM checksum value does not match the value encoded in BIOS.

10 beeps
The shutdown register for CMOS RAM failed.

11 beeps
The second level cache is faulty.

Error messages

`8042 - Gate A20 Failure`
Keyboard controller (8042) is faulty.

`8042 Gate - A20 Error`
Gate A20 on the keyboard controller (8042) is faulty. Contact your customer field service.

`Address Line Short!`
Error in the address decoding circuitry on the system board.

`Base 64 KB Memory Failure`
Memory failure in the first 64 Kbyte of memory.

`Cache Error / External Cache Bad`
The second level cache is faulty.

`Cache Memory Bad, Do Not Enable Cache!`
Cache memory is defective. Contact your customer field service.

`CH-2 Timer Error`
Timer 2 on the system board is faulty.

`CMOS Battery State Low`
The lithium battery in the real-time clock chip on the system board is low. Contact your customer field service.

`CMOS Checksum Failure`
Checksum failure in CMOS RAM. Check the entries in the setup menu.

`CMOS Display Type Mismatch`
The video type stored in the setup menu is incorrect. Check the entries in the setup menu.

`CMOS Memory Size Mismatch`
The size of memory on the system board does not match the size saved in CMOS RAM. Check the entries in the setup menu.

`CMOS Shutdown Register Rd/Wrt Error`
The shutdown register for CMOS RAM failed. Check the entries in the setup menu.

`CMOS System Options Not Set`
The entries stored in CMOS RAM are incorrect or not complete. Check the entries in the setup menu.

`CMOS Time and Date Not Set`
Time and date are not set in setup menu. Call up the setup menu and enter the correct time and date.

`Diskette Boot Failure`
The disk in the drive A: is not a boot diskette or is defective. It cannot be used to boot the system. Insert a system floppy disk in the drive and follow the instructions displayed on the screen.

`Display Memory Read/Write Error`
The system CRT controller is missing or its memory is faulty.

`Display Switch Not Proper`
The setting of jumper J13H3 for the CRT controller is incorrect.

`DMA Bus Time-out`
A device has driven the bus signal for more than 7.8 Microseconds.

`DMA Error`
Error in DMA controller.

`DMA #1 Error`
Error in the first DMA channel.

`DMA #2 Error`
Error in the second DMA channel.

`FDD Controller Failure`
The BIOS cannot communicate with the floppy disk drive controller. Check the entry for *On-Board Floppy Drive* in the setup menu and all connections to the floppy disk drive controller.

`HDD Controller Failure`
The BIOS cannot communicate with the hard disk drive controller. Check the entry for *On-Board IDE Drive* in the setup menu and all connections to the floppy disk drive controller.

`INTR #1 Error`
Interrupt channel 1 failed.

`INTR #2 Error`
Interrupt channel 2 failed.

`Invalid Boot Diskette`
The disk in the drive A: is not a boot diskette or is defective. Insert a system floppy disk in the drive.

`I/O Card Parity Error at xxxxx`
The memory on an expansion card failed. If the address can be determined, it is displayed as xxxx. If not, the message is `I/O Card Parity Error ????`.

`Keyboard Error`
There is a timing problem with the keyboard. Set the *keyboard* option in the setup menu to *Not Installed*.

`Keyboard Is Locked...Unlock It`
The keyboard lock on the system is engaged. The system must be unlocked to continue.

`KB/Interface Error`
The keyboard cable is defective or not properly connected. Check the connections of the keyboard or change the keyboard cable.

`Memory Parity Error at xxxxx`
Memory failed. If the address can be determined, it is displayed as xxxx. If not, the message is `I/O Card Parity Error ????`.

`OFF BOARD PARITY ERROR ADDR (HEX) = (XXXX)`
Parity error in memory installed in an expansion slot.
XXXX is the hex address where the error occurred.

`ON BOARD PARITY ERROR ADDR (HEX) = (XXXX)`
Parity error in memory on the system board.
XXXX is the hex address where the error occurred.

`Parity Error`
Parity error in the first 64 Kbyte of memory.

`Parity Error ????`
Parity error in memory at an unknown address.

`Processor Error`
The CPU on the system board generated an error.

`Processor Exception Interrupt Error`
The CPU on the system board generated an exception interrupt.

`Refresh Failure`
The memory refresh circuitry on the system board is faulty.

`ROM Checksum Error`
ROM checksum value does not match the value encoded in BIOS.

`Timer Not Operational`
Memory failure in the first 64 Kbyte of memory or Timer 1 on the system board is faulty.

Index

⚠ 1

i 1

▶ 1
␣ 1
278H 20
2E8H 19
2F8H 19
378H 20
3BCH 20
3E8H 19
3F8H 19
3 1/2 inch drive 9

A
Adaptec-SCSI controller, Notes 6
Add-on modules 7
Additional video memory, sockets 3
Address
  of Linear Frame Buffer 15
  of Parallel Port 20
  of Serial Port 19
ADVANCED CMOS SETUP 8, 11
Auto 18
Automatic configuration 18
AUTO-CONFIG 10
Available Base Memory 11

B
Bank 0 3
Bank 1 3
Base Memory 11, 16
  Size 16
Battery 5
BIOS
  Recovery 22
  Update 22
Boot operating system 13
Bus interface 3

C
Cache memory 2, 14
CHANGE PASSWORD 9
CMOS RAM
  deletion 22
  jumper 21
Color screen controller setting 23
Configuration 7
  automatic 18
  timeout 10
CONFIGURE
  WITH BIOS DEFAULTS 8
  WITH POWER-ON DEFAULTS 9
Connector 2
  power supply 27
  external loudspeaker 28
  external monitor controller 29
  fan 27
  indicator 28
  indicator system unit on 28
  J10A1 29
  J11H1 power supply 3, 27
  J1F1 external loudspeaker 3, 28
  J1F3 indicator system unit on 3, 28
  J1G1 indicator hard disk drive 3, 28
  J3A1 fan 3, 27
  J8J1 floppy disk drive 3
  J8J2 standard IDE hard disk drive 3
  VESA feature 3, 28
Coprocessor socket 2
Courier 1
Courier bold 1
CPU speed 13

D
Date 9
Deleting CMOS-RAM 22
Detecting hard disk type 10

Disable Shadow Memory Size 15, 16
DMA Transfer Mode 16
DO NOT WRITE TO
  CMOS AND EXIT 9
Drive A before C 13
Drive C:Timeout 10
Drive C:Type 10
Drive C before A 13
Drive D:Timeout 10
Drive D:Type 10
Drive E:Timeout 10
Drive E:Type 10
Drive F:Timeout 10
Drive F:Type 10

E
Enhanced ISA Timing 17
Enhancing Performance 14
Enlarging main memory 24
Error messages 31
  missing operating system 10
ESD modules 5
ESDI hard disk drive 10
Extended 20
Extended Memory 11
External
  loudspeaker, connector 3, 28
  monitor controller, connector 29

F
Fan, connector 3, 27
Features system board 2
First screen page of setup menu 7
First Serial Port Address 19
Flash BIOS jumper 21
Floppy disk drive, connector 3
Floppy Drive
  Controller setting 18
  type 9
Floppy Drive A
Floppy Drive B
Fonts, meanings 1
Free 17
Frequencies 2
Function key F1 7

H
Handle modules with ESDs 5
Hard disk access 17
Hard Disk Drive 19
  connector 3
  indicator, connector 3
  type 10
Help information 7

I
IDE
  DMA Transfer Mode 16
  Hard Disk Drive 19
  hard disk drive, connector 3
  Multiple Sector Mode 17
Important notes 5
Indicator
  connector 28
  hard disk drive, connector 3
  system unit on, connector 3, 28
Installed 11
Installing memory module 25
Interface assignment 27
  J10A1 29
  J11H1 27
  J1F1 28
  J1F3 28
  J1G1 28
  J3A1 27
Interfaces 2
  keyboard 3
  monitor 3
  mouse 3
  parallel 3
  Ser 1 3
  Ser 2 3
  serial 3
Internal cache memory 2

Interrupt
IRQ10 17
IRQ11 17
IRQ9 17
Invoking setup menu 23
IRQ
Active State 20
State 20
IRQ10 17
IRQ11 17
IRQ9 17
ISA Linear Frame Buffer 15

J
J1F1 3, 28
J1F3 3, 28
J1G1 3, 28
J3A1 3, 27
J4F1 3
J4G1 3
J4H1 3
J4H2 3
J7A1 21
J8J1 3
J8J2 3
J10A1 3, 29
J11H1 3, 27
J12H1 21
J12H1-B 22
J12H1-C 22
J13H1 21
J13H1-D 22
J13H3 21
J13H3-F 23
J13H3-G 23
Jumper 7
CMOS RAM 21
Flash BIOS 21
J7A1 21
J12H1-B 22
J12H1-C 22
Jumper
J13H1-D 22
J13H3-F 23
J13H3-G 23
location 21
password 21
settings 21
setup menu 21

K
Key repeat function 11, 12
Keyboard 11
port 3

L
Linear Frame Buffer 15
Lithium battery 5
Load operating system 13
Local Bus 1
Location of jumpers 21
Loudspeaker, connector 3
Lowercase level 13

M
Main memory 24
enlarging 24
sockets 3
Manual 18
Memory
configuration main memory 24
internal cache memory 2
main memory 24
second level cache memory 2
setup memory 2
video memory 2
Memory module
installing 25
removing 25
Message Press <F1>... 12
Missing operating system" 10
Modules with ESDs 5
Monitor interface 3

Monochrome screen controller
setting 23
Mouse interface 3

N
Network Password 14
checking 14
No copying
of memory area 16
to Shadow Memory 15
to Shadow RAM 15, 16
Normal 20
Not Installed 11
Notes on software 6
Num Lock 13

O
On-Board
Floppy Drive 18
IDE Drive 19
Operating System missing 10
Option
ADVANCED CMOS SETUP 11
PERIPHERAL MANAGEMENT SETUP 18
STANDARD CMOS SETUP 9
OverDrive processor Socket 2

P
Parallel
interface 3
Port Address 20
Port Mode setting 20
Password
jumper 21
Prompt 14
PCI slots 2
Pentium processor 2
Performance 14
PERIPHERAL MANAGEMENT SETUP 8, 18
Pin assignment
J10A1 29
J11H1 27
J1F1 28
J1F3 28
J1G1 28
J3A1 27
Ports 2
Power supply, connector 3, 27
Press <F1> Message Display 12
Primary monitor controller 21
Processor 3
Pentium 2
speed 2
Programming Option 18
Programs with time loops 6
Prompt for Password 14

R
Real-time clock chip 3
Recovering BIOS 22
Removing memory module 25
Resetting CMOS-RAM 22
Resolution 4

S
SCO-UNIX, Notes 6
Screen
memory 2
resolution 4
SCSI hard disk drive 10
Second level cache memory 2
Second Serial Port Address 19
Ser 1 3
Ser 2 3
Serial interface 3
Serial Port setting 19
Set Linear Frame Buffer to 15

Settings 7
Address of Linear Frame Buffer 15
Base Memory 16
BIOS Recovery 22
BIOS Update 22
Cache Memory 14
CMOS RAM deletion 22
color screen controller 23
CPU speed 13
date 9
DMA Transfer Mode 16
Floppy Drive Controller 18
Floppy Drive type 9
for booting operating system 13
hard disk access 17
hard disk drive 19
hard disk type 10
Interrupts 17
IRQ State 20
ISA Bus Timing 17
J7A1 21
J12H1-B 22
J12H1-C 22
J13H1-D 22
J13H3-F 23
J13H3-G 23
jumpers 21
key repeat function 11, 12
keyboard 11
Linear Frame Buffer 15
message Press <F1>... 12
monochrome screen controller 23
Num Lock 13
Parallel Port 20
Parallel Port Mode 20
Password Prompt 14
peripherals 18
screen controller 23
Serial Port 19
setup menu
setup menu invocation 23
time 9
timeout for hard disk detection 10
video mode 237
Setup menu 7
ADVANCED CMOS SETUP 11
first screen page 7
Invoking 23
jumper 21
PERIPHERAL MANAGEMENT SETUP 18
STANDARD CMOS SETUP 9
Setup memory 2
Socket
Coprocessor 2
for additional video memory 3
J4F1 and J4G1 for main memory 3
J4H1 and J4H2 for main memory 3
OverDrive processor 2
upgrade 2
SRAM 14
STANDARD CMOS SETUP 8, 9
Start operating system 13
Symbols, meanings 1
System Boot UP
CPU Speed 13
Num Lock 13
Sequence 13
System unit on indicator, connector 3

T
Time 9
Time loop programs 6
Timeout for hard disk detection 10
Timing ISA Bus 17
Transfer Mode of Parallel Port 20
Typematic Rate 12
Delay 12
Programming 11

U
Update BIOS 22
Upgrade socket 2
Upgrading main memory 24
Uppercase level 13
Used 17
USER TYPE 1 10
USER TYPE 2 10

V
VESA feature connector J10A1 3, 29
Video memory 2, 3

W
WRITE TO CMOS AND EXIT 9