Intel® Server Board S5000VSA User's Guide

A Guide for Technically Qualified Assemblers of Intel® Identified Subassemblies/ Products

Intel Order Number D36977-005

Disclaimer

Information in this document is provided in connection with Intel® products. No license, express or implied, by estoppel or otherwise, to any intellectual property rights is granted by this document. Except as provided in Intel's Terms and Conditions of Sale for such products, Intel assumes no liability whatsoever, and Intel disclaims any express or implied warranty, relating to sale and/or use of Intel products including liability or warranties relating to fitness for a particular purpose, merchantability, or infringement of any patent, copyright or other intellectual property right. Intel products are not designed, intended or authorized for use in any medical, life saving, or life sustaining applications or for any other application in which the failure of the Intel product could create a situation where personal injury or death may occur. Intel may make changes to specifications and product descriptions at any time, without notice.

Intel server boards contain a number of high-density VLSI and power delivery components that need adequate airflow for cooling. Intel's own chassis are designed and tested to meet the intended thermal requirements of these components when the fully integrated system is used together. It is the responsibility of the system integrator that chooses not to use Intel developed server building blocks to consult vendor datasheets and operating parameters to determine the amount of airflow required for their specific application and environmental conditions. Intel Corporation can not be held responsible if components fail or the server board does not operate correctly when used outside any of their published operating or non-operating limits.

Intel, Intel Pentium, and Intel Xeon are trademarks or registered trademarks of Intel Corporation or its subsidiaries in the United States and other countries.

* Other names and brands may be claimed as the property of others.

Copyright © 2010, Intel Corporation. All Rights Reserved

Safety Information

Important Safety Instructions

Read all caution and safety statements in this document before performing any of the instructions. See also Intel Server Boards and Server Chassis Safety Information on the *Intel® Deployment Assistant* and/or at http://support.intel.com/support/motherboards/server/sb/cs-010770.htm.

Wichtige Sicherheitshinweise

Lesen Sie zunächst sämtliche Warnund Sicherheitshinweise in diesem Dokument, bevor Sie eine der Anweisungen ausführen. Beachten Sie hierzu auch die Sicherheitshinweise zu Intel-Serverplatinen und Servergehäusen auf der *Intel® Deployment Assistant* oder unter http://support.intel.com/support/motherboards/server/sb/cs-010770.htm.

Consignes de sécurité

Lisez attention toutes les consignes de sécurité et les mises en garde indiquées dans ce document avant de suivre toute instruction. Consultez Intel Server Boards and Server Chassis Safety Information sur le *Intel® Deployment Assistant* ou bien rendez-vous sur le site http://support.intel.com/support/motherboards/server/sb/cs-010770.htm.

Instrucciones de seguridad importantes

Lea todas las declaraciones de seguridad y precaución de este documento antes de realizar cualquiera de las instrucciones. Vea Intel Server Boards and Server Chassis Safety Information en el *Intel® Deployment Assistant* y/o en http://support.intel.com/support/motherboards/server/sb/cs-010770.htm.

重要安全指导

在执行任何指令之前，请阅读本文档中的所有注意事项及安全声明。 和/或 http://support.intel.com/support/motherboards/server/sb/CS-010770.htm *上的 Intel Server Boards and Server Chassis Safety Information（《Intel 服务器主板与服务器机箱安全信息》）。*

Warnings

Heed safety instructions: Before working with your server product, whether you are using this guide or any other resource as a reference, pay close attention to the safety instructions. You must adhere to the assembly instructions in this guide to ensure and maintain compliance with existing product certifications and approvals. Use only the described, regulated components specified in this guide. Use of other products / components will void the UL listing and other regulatory approvals of the product and will most likely result in noncompliance with product regulations in the region(s) in which the product is sold.

System power on/off: The power button DOES NOT turn off the system AC power. To remove power from system, you must unplug the AC power cord from the wall outlet. Make sure the AC power cord is unplugged before you open the chassis, add, or remove any components.

Hazardous conditions, devices and cables: Hazardous electrical conditions may be present on power, telephone, and communication cables. Turn off the server and disconnect the power cord, telecommunications systems, networks, and modems attached to the server before opening it. Otherwise, personal injury or equipment damage can result.

Electrostatic discharge (ESD) and ESD protection: ESD can damage disk drives, boards, and other parts. We recommend that you perform all procedures in this chapter only at an ESD workstation. If one is not available, provide some ESD protection by wearing an antistatic wrist strap attached to chassis ground any unpainted metal surface on your server when handling parts.

ESD and handling boards: Always handle boards carefully. They can be extremely sensitive to ESD. Hold boards only by their edges. After removing a board from its protective wrapper or from the server, place the board component side up on a grounded, static free surface. Use a conductive foam pad if available but not the board wrapper. Do not slide board over any surface.

Installing or removing jumpers: A jumper is a small plastic encased conductor that slips over two jumper pins. Some jumpers have a small tab on top that you can grip with your fingertips or with a pair of fine needle nosed pliers. If your jumpers do not have such a tab, take care when using needle nosed pliers to remove or install a jumper; grip the narrow sides of the jumper with the pliers, never the wide sides. Gripping the wide sides can damage the contacts inside the jumper, causing intermittent problems with the function controlled by that jumper. Take care to grip with, but not squeeze, the pliers or other tool you use to remove a jumper, or you may bend or break the pins on the board.

Preface

About this Manual

Thank you for purchasing and using the Intel® Server Board S5000VSA.

This manual is written for system technicians who are responsible for troubleshooting, upgrading, and repairing this server board. This document provides a brief overview of the features of the board/chassis, a list of accessories or other components you may need, troubleshooting information, and instructions on how to add and replace components on the Title of document. For the latest version of this manual, see http://support.intel.com/support/motherboards/server/S5000VSA/.

Manual Organization

Chapter 1 provides a brief overview of the Intel® Server Board S5000VSA. In this chapter, you will find a list of the server board features, photos of the product, and product diagrams to help you identify components and their locations.

Chapter 2 provides instructions on using the utilities that are shipped with the board or that may be required to update the system. This includes how to navigate through the BIOS Setup screens, how to perform a BIOS update, and how to reset the password or CMOS. Information about the specific BIOS settings and screens is available in the Intel® S5000 Server Board Family Data Sheet. See "Additional Information and Software" for a link to the Intel® S5000 Server Board Family Data Sheet.

Chapter 3 provides instructions on adding and replacing components. Use this chapter for step-by-step instructions and diagrams for installing or replacing components such as the memory, processor, control panel board, and the battery, among other components.

Chapter 4 provides troubleshooting information. In this chapter, you will find BIOS error messages and POST code messages. You will also find suggestions for performing troubleshooting activities to identify the source of a problem.

Product Accessories

This server board is compatible with the following Intel® Server Chassis:

- Intel® Server Chassis SC5299DP
- Intel® Server Chassis SC5299BRP

You may need or want to purchase one or more of the following accessory items for your server:

Processor, memory DIMMs, hard drive, CD-ROM or DVD-ROM drive, RAID controller, operating system.

For information about which accessories, memory, processors, and third-party hardware have been tested and can be used with your board, and for ordering information for Intel products, see http://support.intel.com/support/motherboards/server/S5000VSA/compat.htm.

Additional Information and Software

If you need more information about this product or information about the accessories that can be used with this server board, use the following resources. These files are available at http://support.intel.com/support/motherboards/server/S5000VSA/

Unless otherwise indicated in the table below, once on this Web page, type the document or software name in the search field at the left side of the screen and select the option to search "This Product."

Table 1. Additional Information and Software

For this information or software	Use this Document or Software
For in-depth technical information about this product	*Intel® Server Board S5000VSA Technical Product Specification*
For BIOS settings and chipset information	*Intel® S5000 Server Board Family Data Sheet*
If you just received this product and need to install it	Intel® Server Board S5000VSA *Quick Start User's Guide* in the product box
For virtual system tours and interactive repair information	A link to the SMaRT Tool is available under "Other Resources" at the right side of the screen at http://support.intel.com/support/motherboards/server/S5000VSA
Accessories or other Intel server products	Spares and Configuration Guide

Table 1. Additional Information and Software

For this information or software	Use this Document or Software
Hardware (peripheral boards, adapter cards) and operating systems that have been tested with this product	Tested Hardware Operating Systems List
Chassis that have been tested with this product	Reference Chassis List
Processors that have been tested with this product	Supported Processors
DIMMs that have been tested with this product	Tested Memory List
To make sure your system falls within the allowed power budget	Power Budget Tool
For software to manage your Intel® server	Intel® System Management Software
For drivers	Driver (for an extensive list of available drivers) Operating System Driver (for operating system drivers)
For firmware and BIOS updates, or for BIOS recovery	Firmware Updates
For diagnostics test software	Diagnostics

See also the *Intel® Server Deployment Toolkit CD* that came with your server board.

Contents

Preface ..... **iii**
About this Manual iii
Manual Organization iii
Product Accessories iv
Additional Information and Software iv

Safety Information ..... **xiii**
Important Safety Instructions xiii
Wichtige Sicherheitshinweise xiii
Consignes de sécurité xiii
Instrucciones de seguridad importantes xiii
Warnings xv

Chapter 1: Server Board Features **1**
RAID Support 3
SATA Server Board 3
SAS Server Board 4
Connector and Component Locations 5
Configuration Jumpers 7
Back Panel Connectors 8
Hardware Requirements 9
Processor 9
Memory 9
Power Supply 9
Optional Hardware 10
Hard Disk Drives 10
Intel® Local Control Panel 10

Chapter 2: Server Utilities **11**
Using the BIOS Setup Utility 11
Starting Setup 11
If You Cannot Access Setup 11
Setup Menus 11
Upgrading the BIOS 13
Preparing for the Upgrade 13
Upgrading the BIOS 14
Clearing the Password 15

Chapter 3: Hardware Installations and Upgrades **17**
Before You Begin 17
Tools and Supplies Needed 17

Installing and Removing Memory 17
Installing DIMMs 17
Removing DIMMs 19
Installing the Processor 20
Installing the Heat Sink(s) 22
Removing a Processor 23
Replacing the Backup Battery 24

Appendix A: Getting Help 27
World Wide Web 27
Telephone 27

Appendix B: Regulatory and Compliance Information 31
Product Regulatory Compliance 31
Product Safety Compliance 31
Certifications / Registrations / Declarations 32
Product Regulatory Compliance Markings 32
Electromagnetic Compatibility Notices 33
FCC (USA) 33
Industry Canada (ICES-003) 34
Europe (CE Declaration of Conformity) 34
Taiwan Declaration of Conformity (BSMI) 34
Korean Compliance (RRL) 35
Restriction of Hazardous Substances (RoHS) Compliance 36
End-of-Life / Product Recycling 36

Appendix C: Troubleshooting 37
Resetting the System 37
Problems following Initial System Installation 37
First Steps Checklist 38
Hardware Diagnostic Testing 38
Verifying Proper Operation of Key System Lights 39
Confirming Loading of the Operating System 39
Specific Problems and Corrective Actions 39
Power Light Does Not Light 40
No Characters Appear on Screen 40
Characters Are Distorted or Incorrect 41
System Cooling Fans Do Not Rotate Properly 41
CD-ROM Drive or DVD-ROM Drive Activity Light Does Not Light 42
Cannot Connect to a Server 42
Problems with Network 42
System Boots when Installing PCI Card 43
Problems with Newly Installed Application Software 43
Problems with Application Software that Ran Correctly Earlier 44

Devices are not Recognized under Device Manager (Windows* Operating System) . 44
Hard Drive(s) are not Recognized 44
Bootable CD-ROM Disk Is Not Detected 45
LED Information 45
BIOS POST Beep Codes 46

Appendix D: Intel® Server Issue Report Form 47

List of Tables

Table 1. Additional Information and Software iv
Table 2. Server Board Features 2
Table 3. NIC LED Descriptions 8
Table 4. Setup Menu Key Use 12
Table 5. Product Certification Markings 32
Table 6. Resetting the System 37
Table 7. LED Information 45
Table 8. POST Error Beep Codes 46

List of Figures

Figure 1. Intel® Server Board S5000VSA 1
Figure 2. Server Board Connector and Component Locations 6
Figure 3. Configuration Jumper Descriptions 7
Figure 4. Back Panel Connectors 8
Figure 5. Password Clear Jumper 15
Figure 6. CMOS Clear Jumper 16
Figure 7. Installing Memory (S5000VSASATA/S5000VSASATAR shown) 18
Figure 8. Lifting the Socket Handle 20
Figure 9. Open the Load Plate 20
Figure 10. Removing the Shipping Cover 21
Figure 11. Installing the Processor 21
Figure 12. Removing the Protective Socket Cover 21
Figure 13. Installing the Heat Sink 22
Figure 14. Replacing the Backup Battery (S5000VSASATA/S5000VSASATAR shown) 25

1 Server Board Features

This chapter briefly describes the main features of the Intel® Server Board S5000VSA. This chapter provides a photograph of the product, a list of the server board features, and diagrams showing the location of important components and connections on the server board.

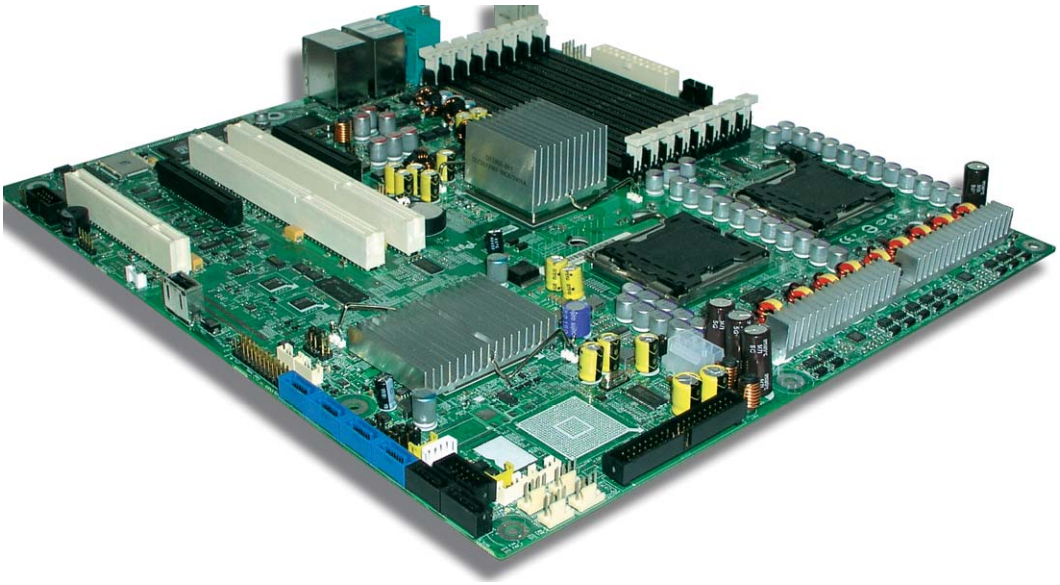

Figure 1. Intel® Server Board S5000VSA

Table 2 summarizes the features of the server board.

Table 2. Server Board Features

Feature	Description
Processor	Support for up to two Dual-Core Intel® Xeon® processors 5000 or 5100 sequence with a 677-, 1066-, or 1333-MHz front side bus. Up to two Quad-Core Intel® Xeon® processors 5300 sequence with a 1066- or 1333-MHz front side bus. Up to two 45nm 2P Dual-Core Intel® Xeon® processors. Product codes S5000VSASATAR, S5000VSASASR,S5000VSASCSIR, and S5000VSA4DIMMR only. Up to two 45nm next generation Quad-Core Intel® Xeon® processors. Product codes S5000VSASATAR, S5000VSASASR, S5000VSASCSIR, and S5000VSA4DIMMR only.
Memory	• Entry SATA sku: four DIMM sockets supporting stacked DDR2 533/667[1] MHz FBDIMM memory (up to 8 GB of total system memory) • All other board skus: eight DIMM sockets supporting stacked DDR2 533/667 MHz FBDIMM memory (up to 16 GB of total system memory)
Chipset	Intel® 5000V chipset, consisting of: • Intel® 5000V Memory Controller Hub (MCH) • Intel® Enterprise South Bridge (ESB2-E)
Peripheral Interfaces	**External connections:** • Stacked PS/2* ports for keyboard and mouse • DB9 Serial A port • Two RJ45 NIC connectors for 10/100/1000 Mb connections • Four USB 2.0 ports **Internal connections:** • One USB port header, which supports two USB 2.0 ports • One DH10 Serial B header • Six Serial ATA connectors with embedded RAID 0/1/10 support for S5000VSASATA/S5000VSASATAR and S5000VSASCSI/S5000VSASCSIR SKUs. Optional RAID 5 support requires an AXXRAKSW5 RAID key. • Four SAS and two SATA connectors with embedded RAID 0/1/10 support for S5000VSASAS/S5000VSASASR SKU. Optional RAID 5 support requires an AXXRAKSW5 RAID key. • One ATA-133 connector • SSI-compliant 34-pin, high-density 100-pin, and alternate 50-pin control panel headers
I/O Control	National Semiconductor* PC87427 controller
Video	On-board ATI* ES1000 video controller with 16MB external video memory
Hard drive	• ATA-133 support: one IDE channel capable of supporting up to two drives • SATA support • SAS support (optional)
LAN	Intel® 82563EB dual port controller for 10/100/1000 Mbit/sec Ethernet LAN connectivity
Expansion Capabilities	• One 32-bit/33MHz, 5V PCI connector • One full length 64-bit/133MHz PCI-X* connector • One 64-bit/100MHz PCI-X* connector • Two x4 PCI Express* connectors

Table 2. Server Board Features

Feature	Description
Fans	Support for up to six system fans and two processor fans
System Management	Intel® System Management Software

RAID Support

The Intel® Server Board S5000VSA is available in both SATA and SAS models. The SATA model has order code S5000VSASATA/S5000VSASATAR. The SAS model has order code S5000VSASAS/S5000VSASASR. The SAS model provides both SAS and SATA support; the SATA model provides only SATA support.

For information on configuring RAID, see the RAID Software Guide that is included on the *Intel® Server Deployment Toolkit CD*.

SATA Server Board

The Intel® Server Board S5000VSA provides an embedded SATA controller that supports both 1.5 and 3.0 Gbps data transfer rates.

The BIOS Setup utility provides multiple drive configuration options on the Advanced | ATA Controller setup page, some of which affect the ability to configure RAID. The "Onboard SATA Controller" option is enabled by default. When this option is enabled, the "SATA Mode" option can be set to either Legacy or Enhanced. The Legacy and Enhanced modes affect the RAID configuration as follows:

- Legacy supports four disk drives and does not provide RAID support.
- Enhanced supports six disk drives and is required for RAID configurations.

When the enhanced mode is selected, you can choose to enable or disable "AHCI Mode" or "Configure SATA as RAID". Intel® Embedded Server RAID Technology II is enabled by the option, "Configure SATA as RAID." The Intel® Embedded Server RAID Technology II feature provides RAID modes 0, 1, and 10.

For RAID 0, 1, and 10, enclosure management is provided through the SATA_SGPIO connector on the server board when a cable is attached between this connector on the server board and to the backplane I^2C interface.

If RAID 5 is desired, the optional Intel® RAID Activation Key AXXRAKSW5 (available post-release) can be installed. To enable RAID 5, this activation key is placed on the SATA_Key connector that is located at the left side of the server board. For information on how to install the Intel® RAID Activation Key AXXRAKSW5 accessory to enable RAID 5, see the documentation that is included with the accessory kit.

Notes: *For assistance in navigating through the F2 BIOS Setup utility, see the Intel® Server Board S5000VSA Technical Product Specification.*

For information on setting up RAID, see the RAID Software Guide that is included on the Intel® Server Deployment Toolkit CD.

SAS Server Board

In addition to the SATA features described above, SAS models of the server board (order code S5000VSASAS/S5000VSASASR) also have a dual-mode 4-port Serial Attached SCSI (SAS) controller that supports both SAS and SATA hard disk drives. This controller is capable of data transfer rates of up to 3.0 Gbps per port.The SAS controller (in RAID mode) supports eight physical drives and eight logical arrays. The SAS controller (in native mode) supports up to 120 physical drives when expanders are used.

The BIOS Setup utility includes options on the Advanced | Mass Storage setup page to enable or disable the SAS option ROM and the SAS controller. Both of these options must be enabled to use RAID.

- When the SAS controller is enabled, the two black SATA ports on the server board continue to function as SATA ports. The four blue ports can be used as either SAS or SATA ports. When the SAS controller is disabled in the BIOS Setup utility, only the two black SATA ports will be available.
- When the SAS option ROM is enabled in the BIOS Setup utility, Intel® Embedded Server RAID Technology II is available. This enables SAS RAID modes 0, 1, or 10 for the four blue ports on the server board. The SAS controller can mix SAS and SATA drives.

If the SAS option ROM is disabled in the BIOS Setup utility, but the SAS controller is enabled, the four blue ports on the server board continue to function as either SAS or SATA ports and the two black ports on the server board continue to function as SATA-only ports. However, RAID support is not available unless enabled in the BIOS for either SATA or SAS.

SAS server boards can use either or both of the SAS and SATA controllers. Either one or two Intel® RAID Activation Keys AXXRAKSW5 can be installed, one for the SAS controller and/or one for the SATA controller. The RAID controllers have separate configuration utilities available at boot, but they share the Intel® RAID Web Console 2 management utility.

Both SAS and SATA controllers support SGPIO enclosure management. Two SGPIO connectors are available on SAS models of the server board, one for the SAS controller and one for the SATA controller.

If RAID 5 is desired, the optional Intel® RAID Activation Key AXXRAKSW5 (available post-release) can be installed. To enable RAID 5, this activation key is placed on the SAS_Key connector that is located at the left side of the server board. For information on how to install the Intel® RAID Activation Key AXXRAKSW5 accessory to enable RAID 5, see the documentation that is included with the accessory kit.

Notes: *For assistance in navigating through the BIOS Setup utility, see the Intel® Server Board S5000VSA Technical Product Specification.*

For information on RAID configuration through the BIOS console and Intel® RAID Web Console 2, see the RAID Software Guide.

Connector and Component Locations

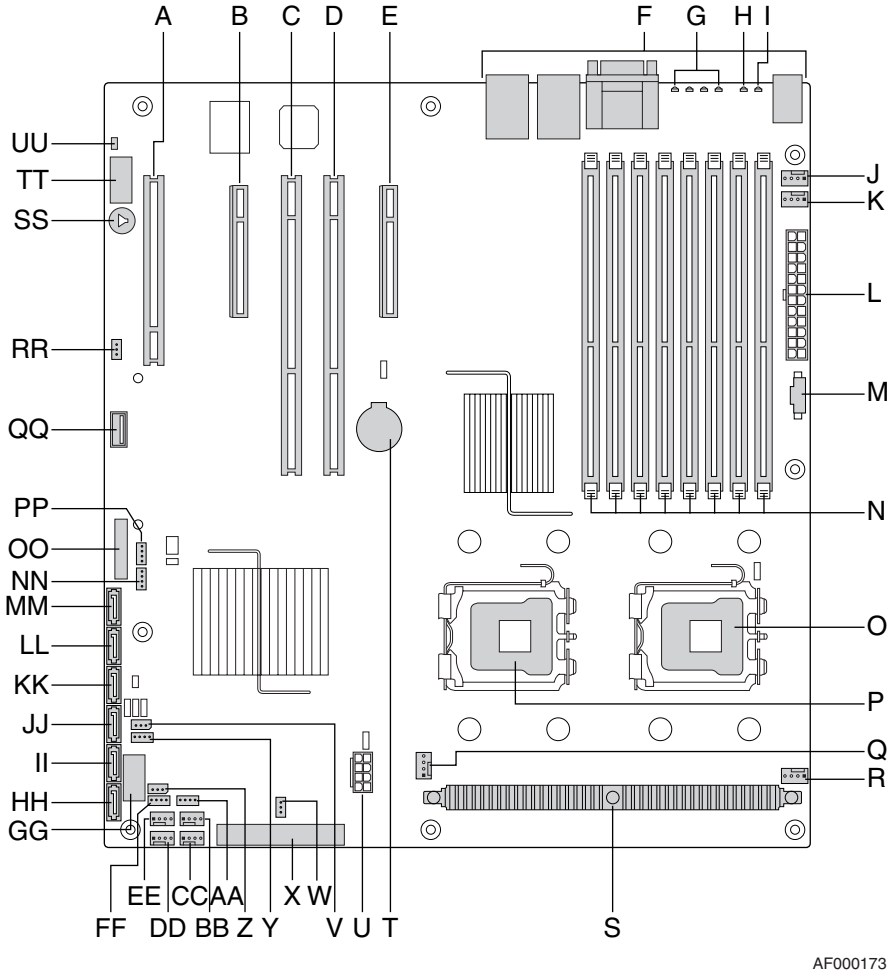

A. PCI 32/33 Slot 1	B. PCIe* x4 Slot 3	C. PCI-X* 64/133 Slot 4
D. PCI-X 64/100 Slot 5	E. PCIe x4 Slot 6	F. Back Panel I/O Ports
G. Diagnostic LEDs (1)	H. System ID LED (1)	I. System Status LED (1)
J. System Fan 6	K. System Fan 5	L. Main Power Connector
M. Auxiliary Signal Connector	N. DIMM Sockets (2)	O. Processor 1 Socket
P. Processor 2 Socket	Q. Processor Fan 2 Header	R. Processor Fan 1 Header
S. Processor Voltage Regulator	T. Battery	U. Processor Power Connector
V. IPMB Header	W. SAS RAID 5 Key (3)	X. IDE Connector
Y. LCP Header	Z. SAS_SES2 (3)	AA. SAS SGPIO (3)
BB. System Fan 3	CC. System Fan 4	DD. System Fan 2
EE. System Fan 1	FF. SATA SGPIO	GG. USB 4-5
HH. SATA 0 Connector	II. SATA 1 Connector	JJ. SATA 2/SAS 0 Connector
KK. SATA 3/SAS 1 Connector	LL. SATA 4/SAS 2 Connector	MM. SATA 5/SAS 3 Connector
NN. Backplane Connector B	OO. Front Panel Header	PP. Backplane Connector A
QQ. USB 6 (1)	RR. SATA RAID 5 Key	SS. Speaker
TT. Serial B EMP Connector	UU. Chassis Intrusion	

Figure 2. Server Board Connector and Component Locations

Notes: *(1) Not available on S5000VSA4DIMM/S5000VSA4DIMMR.*

(2) S5000VSA4DIMM/S5000VSA4DIMMR only has four DIMM sockets.

(3) Only available on S5000VSASAS/S5000VSASASR.

Configuration Jumpers

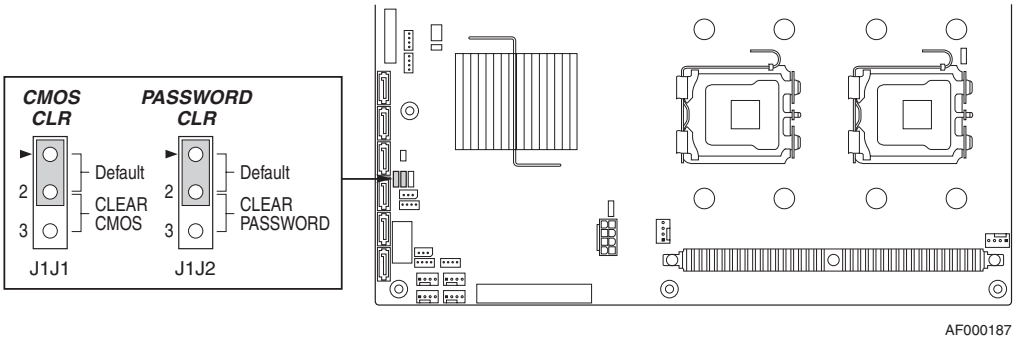

Jumper Name	Jumper Purpose
CMOS Clear	If pins 2-3 are jumpered, the CMOS settings will be cleared on the next reset. These pins should be jumpered on 1-2 for normal operation.
Password Clear	If pins 2-3 are jumpered, administrator and user passwords will be cleared on the next reset. These pins should be jumpered on 1-2 for normal operation.
BIOS Select	If pins 2-3 are jumpered, the BIOS in the lower bank will be selected on the next reset. These pins should be jumpered on 1-2 for normal operation.

Figure 3. Configuration Jumper Descriptions

Back Panel Connectors

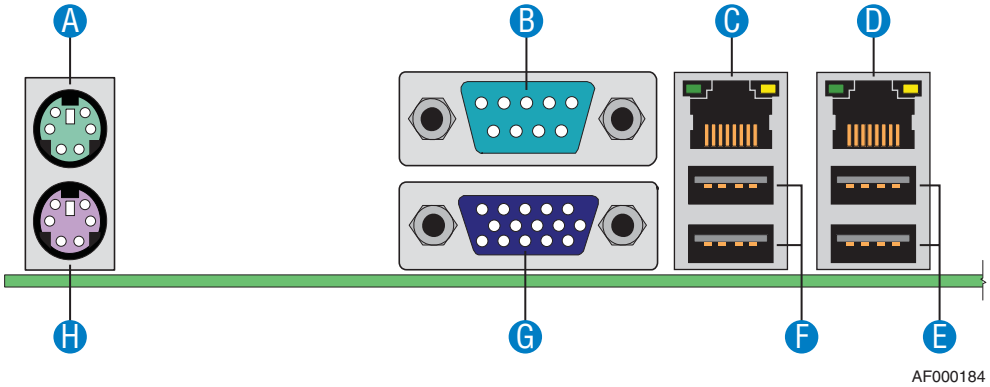

A. Mouse	B. Serial Port B
C. NIC 1 (10/100/1000 Mb)	D. NIC 2 (10/100/1000 Mb)
E. USB 2-3	F. USB 0-1
G. Video	H. Keyboard

Figure 4. Back Panel Connectors

The NIC LEDs at the right and left of each NIC provide the following information.

Table 3. NIC LED Descriptions

LED	LED State	Description
Left	Off	No network connection
	Solid Amber	Network connection in place
	Blinking Amber	Transmit/receive activity
Right	Off	10 Mbps connection (if left LED is on or blinking)
	Solid Amber	100 Mbps connection
	Solid Green	1000 Mbps connection

Hardware Requirements

To avoid integration difficulties and possible board damage, your system must meet the requirements outlined below. For a list of qualified components, see the links under "Additional Information and Software."

Processor

Support for one or two Dual-Core Intel® Xeon® processors 5000 or 5100 sequence with a 677-, 1066-, or 1333-MHz front side bus.

Up to two Quad-Core Intel® Xeon® processors 5300 sequence with a 1066- or 1333-MHz front side bus.

Up to two 45nm 2P Dual-Core Intel® Xeon® processors. Product codes S5000VSASATAR, S5000VSASASR, S5000VSASCSIR, and S5000VSA4DIMMR only.

Up to two 45nm next generation Quad-Core Intel® Xeon® processors. Product codes S5000VSASATAR, S5000VSASASR, S5000VSASCSIR, and S5000VSA4DIMMR only.

For a complete list of supported processors, see the links under "Additional Information and Software."

Memory

The server board provides eight DIMM sockets across two channels, Channel A and Channel B. Channel A consists of DIMM sockets A1, A2, A3, and A4. Channel B consists of DIMM sockets B1, B2, B3, and B4. The entry SATA SKU provides four DIMM sockets where DIMM sockets A3, A4, B3, and B4 are depopulated.

A minimum of one 512 MB DIMM is required in DIMM socket A1. DIMMs must be installed starting with the lowest number slot in a given channel.

All DIMMs with the same slot number within a given branch must match (size, technology, manufacturer). It is not required to match DIMMs between different slot numbers.

DIMMs must meet the following requirements:

- Use only Fully Buffered DIMMs (FBD) with DDR2 DRAM technology.
- Use only FBD DDR2-533 and FBD DDR2-667 stacked DIMM modules.

For a complete list of supported memory DIMMs, see the links under "Additional Information and Software."

Power Supply

A minimum of 550 Watts is required. Your supply must provide a minimum of 3A of 5V standby current or the board will not boot.

Optional Hardware

Hard Disk Drives

The server board supports different hard disk drive options, depending on the version of the server board purchased.

- The Intel® Server Board S5000VSASATA/S5000VSASATAR provides six SATA ports and one IDE connection. The six SATA ports are near the front left side of the server board. The IDE connection supports one or two ATA-133 devices. IDE devices can be connected to the standard IDE connector located near the SATA ports.
- The Intel® Server Board S5000VSASAS/S5000VSASASR provides four SAS ports and one IDE connection. The four SAS ports are near the front left side of the server board. The IDE connection supports one or two ATA-133 devices. IDE devices can be connected to the standard IDE connector located near the SAS ports.
- The Intel® Server Board S5000VSASCSI/S5000VSASCSIR provides six SATA ports, one IDE connection and an LSI Logic* LSI20320-R-B single channel Ultra 320 SCSI controller.

See the documentation included with your server chassis for additional drive information and drive installation instructions.

Intel® Local Control Panel

The Intel® Local Control Panel provides enhanced system control by utilizing a LCD display, which provides additional controls and indicators beyond the standard control panel.

2 Server Utilities

Using the BIOS Setup Utility

This section describes the BIOS Setup Utility options, which is used to change server configuration defaults. You can run BIOS Setup with or without an operating system being present. See “Additional Information and Software” for a link to the Intel® S5000 Server Board Family Data Sheet where you will find details about specific BIOS setup screens.

Starting Setup

You can enter and start BIOS Setup under several conditions:

- When you turn on the server, after POST completes the memory test.
- When you have moved the CMOS jumper on the server board to the "Clear CMOS" position (enabled).

In the two conditions listed above, during the Power On Self Test (POST), you will see this prompt:

```
Press <F2> to enter SETUP
```

In a third condition, when CMOS/NVRAM has been corrupted, you will see other prompts but not the <F2> prompt:

```
Warning: CMOS checksum invalid
Warning: CMOS time and date not set
```

In this condition, the BIOS will load default values for CMOS and attempt to boot.

If You Cannot Access Setup

If you are not able to access BIOS Setup, you might need to clear the CMOS memory. For instructions on clearing the CMOS, see "Clearing the CMOS".

Setup Menus

Each BIOS Setup menu page contains a number of features. Except for those features that are provided only to display automatically configured information, each feature is associated with a value field that contains user-selectable parameters. These parameters can be changed if the user has adequate security rights. If a value cannot be changed for any reason, the feature's value field is inaccessible.

"Setup Menu Key Use" describes the keyboard commands you can use in the BIOS Setup menus.

Table 4. Setup Menu Key Use

Key to Press	Description
<F1>	Pressing <F1> on any menu invokes the general help window.
Left and right arrows	The left and right arrow keys are used to move between the major menu pages. The keys have no affect if a submenu or pick list is displayed.
Up arrow	Select Item up - The up arrow is used to select the previous value in a menu item's option list, or a value field pick list. Pressing the <Enter> key activates the selected item.
Down arrow	Select Item down - The down arrow is used to select the next value in a menu item's option list, or a value field pick list. Pressing the <Enter> key activates the selected item.
<F5> or <->	Change Value - The minus key or the <F5> function key is used to change the value of the current item to the previous value. This key scrolls through the values in the associated pick list without displaying the full list.
<F6> or <+>	Change Value - The plus key or the <F6> function key is used to change the value of the current menu item to the next value. This key scrolls through the values in the associated pick list without displaying the full list. On 106-key Japanese keyboards, the plus key has a different scan code than the plus key on the other keyboard, but it has the same effect.
<Enter>	Execute Command - The <Enter> key is used to activate submenus when the selected feature is a submenu, or to display a pick list if a selected feature has a value field, or to select a sub-field for multi-valued features like time and date. If a pick list is displayed, the <Enter> key will undo the pick list, and allow another selection in the parent menu.
<Esc>	Exit - The <Esc> key provides a mechanism for backing out of any field. This key will undo the pressing of the <Enter> key. When the <Esc> key is pressed while editing any field or selecting features of a menu, the parent menu is re-entered. When the <Esc> key is pressed in any submenu, the parent menu is re-entered. When the <Esc> key is pressed in any major menu, the exit confirmation window is displayed and the user is asked whether changes can be discarded.

<F9>	Setup Defaults - Pressing <F9> causes the following to appear:
	`Setup Confirmation`
	`Load default configuration now?`
	`[Yes] [No]`
	If "Yes" is selected and the <Enter> key is pressed, all Setup fields are set to their default values. If "No" is selected and the <Enter> key is pressed, or if the <Esc> key is pressed, the user is returned to where they were before <F9> was pressed without affecting any existing field values.

Table 4. Setup Menu Key Use

Key to Press	Description

<F10>	Save and Exit - Pressing <F10> causes the following message to appear:
	`Setup Confirmation`
	`Save Configuration changes and exit now?`
	`[Yes] [No]`
	If "Yes" is selected and the <Enter> key is pressed, all changes are saved and Setup is exited. If "No" is selected and the <Enter> key is pressed, or the <Esc> key is pressed, the user is returned to where they were before <F10> was pressed without affecting any existing values.

Upgrading the BIOS

The upgrade utility allows you to upgrade the BIOS in flash memory. The code and data in the upgrade file include the following:

- On-board system BIOS, including the recovery code, BIOS Setup Utility, and strings.
- On-board video BIOS, and other option ROMs for devices embedded on the server board.
- OEM binary area
- Microcode
- A way to change the BIOS language

Preparing for the Upgrade

The steps below explain how to prepare to upgrade the BIOS, including how to record the current BIOS settings and how to obtain the upgrade utility.

Note: *In the unlikely event that a BIOS error occurs during the BIOS update process, a recovery process may need to be followed to return the system to service. See "Additional Information and Software" for a link to necessary software and instructions.*

Recording the Current BIOS Settings

1. Boot the computer and press <F2> when you see the message:

`Press <F2> Key if you want to run SETUP`

2. Write down the current settings in the BIOS Setup program.

Note: *Do not skip step 2. You will need these settings to configure your computer at the end of the procedure.*

Obtaining the Upgrade

Download the BIOS image file to a temporary folder on your hard drive or a USB flash device. See "Additional Information and Software" for a link to the update software.

Note: *Review the instructions and release notes that are provided in the readme file distributed with the BIOS image file before attempting a BIOS upgrade. The release notes contain critical information regarding jumper settings, specific fixes, or other information to complete the upgrade.*

Upgrading the BIOS

Follow the instructions in the readme file that came with the BIOS upgrade. When the update completes, remove the bootable media from which you performed the upgrade.

Caution: *Do not power down the system during the BIOS update process! The system will reset automatically when the BIOS update process is completed.*

Note: *You may encounter a CMOS Checksum error or other problem after reboot. If this happens, shut down the system and boot it again. CMOS checksum errors require that you enter Setup, check your settings, save your settings, and exit Setup.*

Clearing the Password

If the user or administrator password(s) is lost or forgotten, moving the password clear jumper into the "clear" position clears both passwords. The password clear jumper must be restored to its original position before a new password(s) can be set.

1. Power down the system and disconnect the AC power.
2. Open the server chassis.
3. Move the jumper (J1J2) from the normal operation position, Password Clear Protect, at pins 1 and 2 to the Password Clear Erase position, covering pins 2 and 3 as indicated in the following diagram.

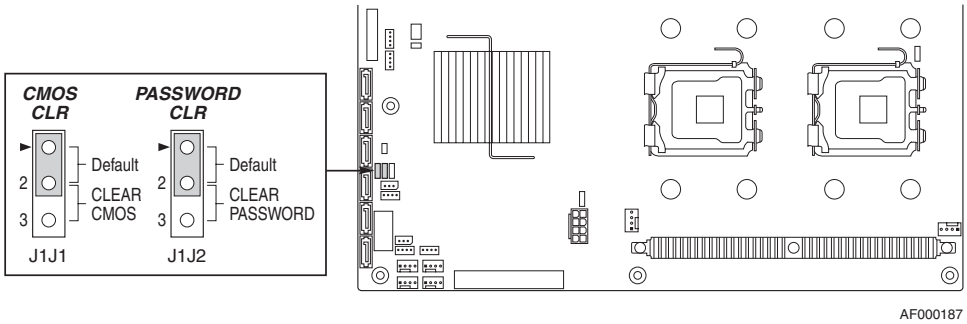

Figure 5. Password Clear Jumper

4. Reconnect the AC power, power up the system.
5. Power down the system and disconnect the AC power.
6. Return the Password Clear jumper to the Password Clear Protect position, covering pins 1 and 2.
7. Close the server chassis.
8. Reconnect the AC power and power up the server.

Clearing the CMOS

If you are not able to access the BIOS setup screens, the CMOS Clear jumper will need to be used to reset the configuration RAM.

1. Power down the system and disconnect the AC power.
2. Open the server.
3. Move the jumper (J1J1) from the normal operation position, CMOS Clear by BMC, at pins 1 and 2 to the CMOS Clear Force Erase position, covering pins 2 and 3 as indicated in the following diagram.

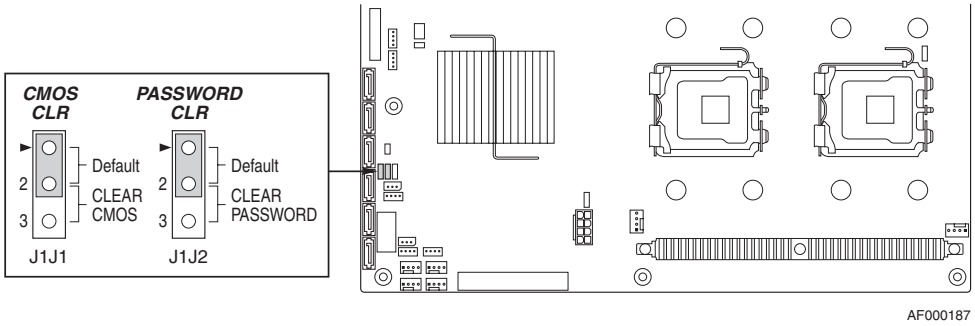

Figure 6. CMOS Clear Jumper

4. Reconnect the AC power, power up the system.
5. When the system begins beeping, power it down and disconnect the AC power.
6. Return the CMOS Clear jumper to the CMOS Clear by BMC location, covering pins 1 and 2.
7. Close the server chassis.
8. Reconnect the AC power and power up the system.

3 Hardware Installations and Upgrades

Before You Begin

Before working with your server product, pay close attention to the “Safety Information” at the beginning of this manual.

Tools and Supplies Needed

- Phillips* (cross head) screwdriver (#1 bit and #2 bit)
- Needle nosed pliers
- Antistatic wrist strap and conductive foam pad (recommended)

Installing and Removing Memory

The silkscreen on the board for the DIMMs displays DIMM A1, DIMM A2, DIMM A3, DIMM A4, DIMM B1, DIMM B2, DIMM B3, and DIMM B4 starting from the center of the board. See "Memory" for a discussion of the memory requirements and options. See “Additional Information and Software” for a link to the list of tested DIMMs.

Installing DIMMs

To install DIMMs, follow these steps:

1. Observe the safety and ESD precautions in “Safety Information”.
2. Turn off all peripheral devices connected to the server. Turn off the server.
3. Disconnect the AC power cord from the server.
4. Remove the server's cover. See the documentation that came with your server chassis for instructions on removing the server's cover.
5. Locate the DIMM sockets (see Figure 7).

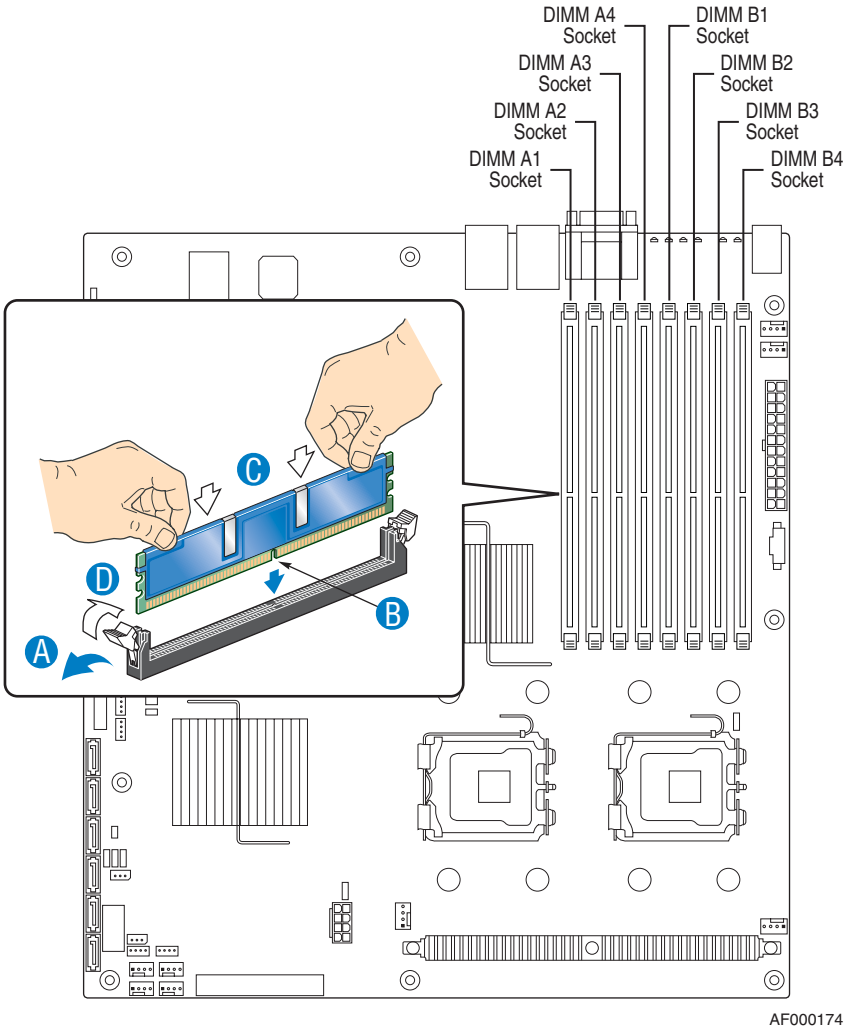

Figure 7. Installing Memory (S5000VSASATA/S5000VSASATAR shown)

6. Make sure the clips at either end of the DIMM socket(s) are pushed outward to the open position.
7. Holding the DIMM by the edges, remove it from its anti-static package.
8. Position the DIMM above the socket. Align the notch on the bottom edge of the DIMM with the key in the DIMM socket. The arrow in the inset in Figure 7 is pointing to the key in the socket.
9. Insert the bottom edge of the DIMM into the socket.
10. When the DIMM is inserted, push down on the top edge of the DIMM until the retaining clips snap into place. Make sure the clips are firmly in place.

11. Replace the server's cover and reconnect the AC power cord. See the documentation that came with your server chassis for instructions on installing the server's cover.

Removing DIMMs

To remove a DIMM, follow these steps:

1. Observe the safety and ESD precautions in "Safety Information".
2. Turn off all peripheral devices connected to the server. Turn off the server.
3. Remove the AC power cord from the server.
4. Remove the server's cover. See the documentation that came with your server chassis for instructions on removing the server's cover.
5. Gently spread the retaining clips at each end of the socket. The DIMM lifts from the socket.
6. Holding the DIMM by the edges, lift it from the socket, and store it in an anti-static package.
7. Reinstall and reconnect any parts you removed or disconnected to reach the DIMM sockets.
8. Replace the server's cover and reconnect the AC power cord. See the documentation that came with your server chassis for instructions on installing the server's cover.

Installing or Replacing the Processor

Caution: *Processor must be appropriate: You may damage the server board if you install a processor that is inappropriate for your server. See "Additional Information and Software" for a link to the list of compatible processor(s).*

Caution: *ESD and handling processors: Reduce the risk of electrostatic discharge (ESD) damage to the processor by doing the following: (1) Touch the metal chassis before touching the processor or server board. Keep part of your body in contact with the metal chassis to dissipate the static charge while handling the processor. (2) Avoid moving around unnecessarily.*

Installing the Processor

To install a processor, follow these instructions:

1. Observe the safety and ESD precautions in "Safety Information".
2. Turn off all peripheral devices connected to the server. Turn off the server.
3. Disconnect the AC power cord from the server.
4. Remove the server's cover. See the documentation that came with your server chassis for instructions on removing the server's cover.
5. Locate the processor socket and raise the socket handle completely (see Figure 8).

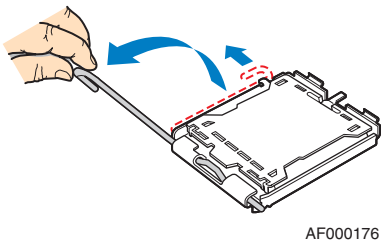

Figure 8. Lifting the Socket Handle

6. Push the rear tab with your finger tip to bring the front end of the load plate up slightly. Open the load plate as shown (see Figure 9).

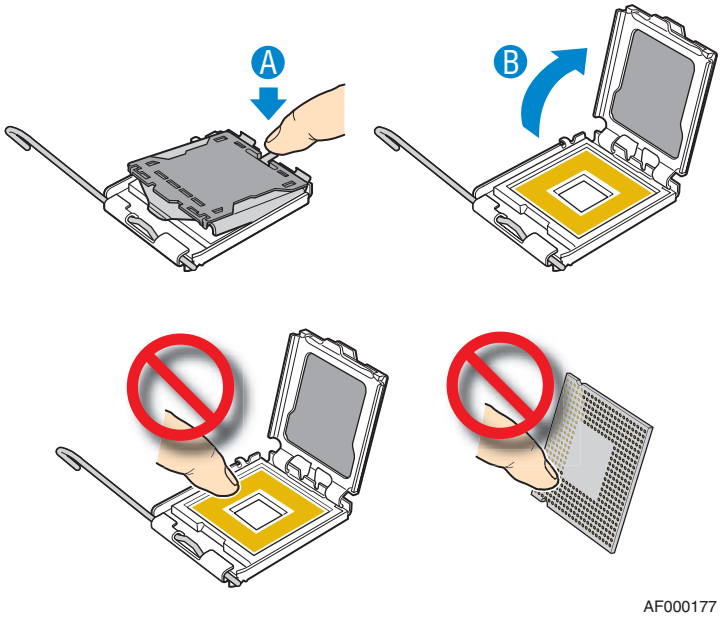

Figure 9. Open the Load Plate

Note: *Do not touch the socket pins; they are very sensitive and easily damaged.*

7. Take the processor out of the box and remove the protective shipping cover (see Figure 10).

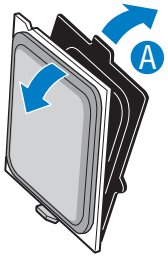

AF000180

Figure 10. Removing the Shipping Cover

8. Orient the processor with the socket so that the processor cutouts match the socket notches. Install the processor as shown in Figure 11.

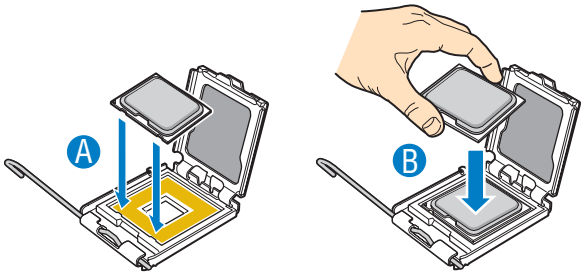

AF000181

Figure 11. Installing the Processor

Note: *Make sure the alignment triangle mark and the alignment triangle cutout align correctly.*

9. Remove the protective socket cover (see Figure 12).

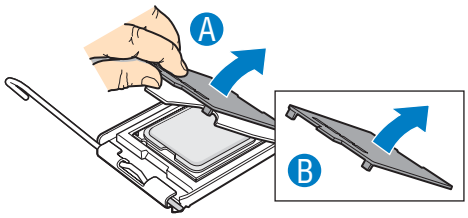

AF000178

Figure 12. Removing the Protective Socket Cover

10. Lower the CPU load plate and lower the socket lever completely.

Note: *Retain the protective socket cover for use when removing a processor that will not be replaced.*

Installing the Heat Sink(s)

The heat sink has Thermal Interface Material (TIM) located on the bottom of it. Use caution when you unpack the heat sink so you do not damage the TIM.

1. Set the heat sink over the processor, lining up the four captive screws with the four posts surrounding the processor.
2. Loosely screw in the captive screws on the heat sink corners in a diagonal manner. Do no fully tighten one screw before tightening another.
3. Gradually and equally tighten each captive screw until each is firmly tightened.

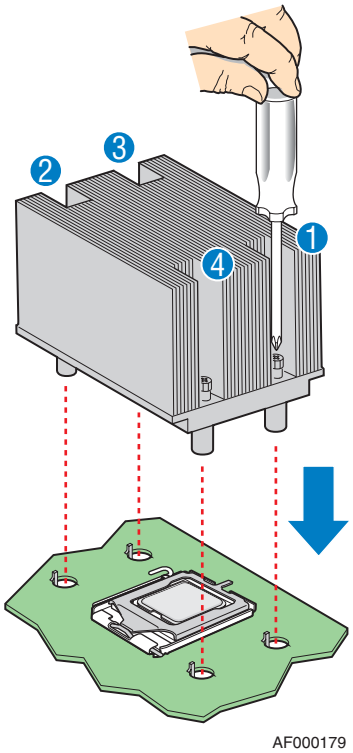

Figure 13. Installing the Heat Sink

4. Reinstall and reconnect any parts you removed or disconnected to reach the processor sockets.
5. Replace the server's cover and reconnect the AC power cord. See the documentation that came with your server chassis for instructions on installing the server's cover.

Removing a Processor

1. Observe the safety and ESD precautions in “Safety Information”.
2. Turn off all peripheral devices connected to the server. Turn off the server.
3. Remove the AC power cord from the server.
4. Remove the server's cover. See the documentation that came with your server chassis for instructions on removing the server's cover.
5. Unplug the processor fan cable from the server board.
6. Loosen the four captive screws on the corners of the heat sink.
7. Twist the heat sink slightly to break the seal between the heat sink and the processor.
8. Lift the heat sink from the processor. If it does not pull up easily, twist the heat sink again. Do not force the heat sink from the processor. Doing so could damage the processor.
9. Lift the processor lever.
10. Raise the CPU load plate.
11. Remove the processor.
12. If installing a replacement processor, see “Installing the Processor”. Otherwise, install the protective socket cover over the empty processor socket and reinstall the chassis cover.

Replacing the Backup Battery

The lithium battery on the server board powers the RTC for up to 10 years in the absence of power. When the battery starts to weaken, it loses voltage, and the server settings stored in CMOS RAM in the RTC (for example, the date and time) may be wrong. Contact your customer service representative or dealer for a list of approved devices.

Warning: *Danger of explosion if battery is incorrectly replaced. Replace only with the same or equivalent type recommended by the equipment manufacturer. Discard used batteries according to manufacturer's instructions.*

Advarsel: Lithiumbatteri - Eksplosionsfare ved fejlagtig håndtering. Udskiftning må kun ske med batteri af samme fabrikat og type. Levér det brugte batteri tilbage til leverandøren.

Advarsel: Lithiumbatteri - Eksplosjonsfare. Ved utskifting benyttes kun batteri som anbefalt av apparatfabrikanten. Brukt batteri returneres apparatleverandøren.

Varning: Explosionsfara vid felaktigt batteribyte. Använd samma batterityp eller en ekvivalent typ som rekommenderas av apparattillverkaren. Kassera använt batteri enligt fabrikantens instruktion.

Varoitus: Paristo voi räjähtää, jos se on virheellisesti asennettu. Vaihda paristo ainoastaan laitevalmistajan suosittelemaan tyyppiin. Hävitä käytetty paristo valmistajan ohjeiden mukaisesti.

1. Observe the safety and ESD precautions in “Safety Information”.
2. Turn off all peripheral devices connected to the server. Turn off the server.
3. Disconnect the AC power cord from the server.
4. Remove the server's cover and locate the battery. See the documentation that came with your server chassis for instructions on removing the server's cover.
5. Insert the tip of a small flat bladed screwdriver, or an equivalent, under the tab in the plastic retainer. Gently push down on the screwdriver to lift the battery.
6. Remove the battery from its socket.

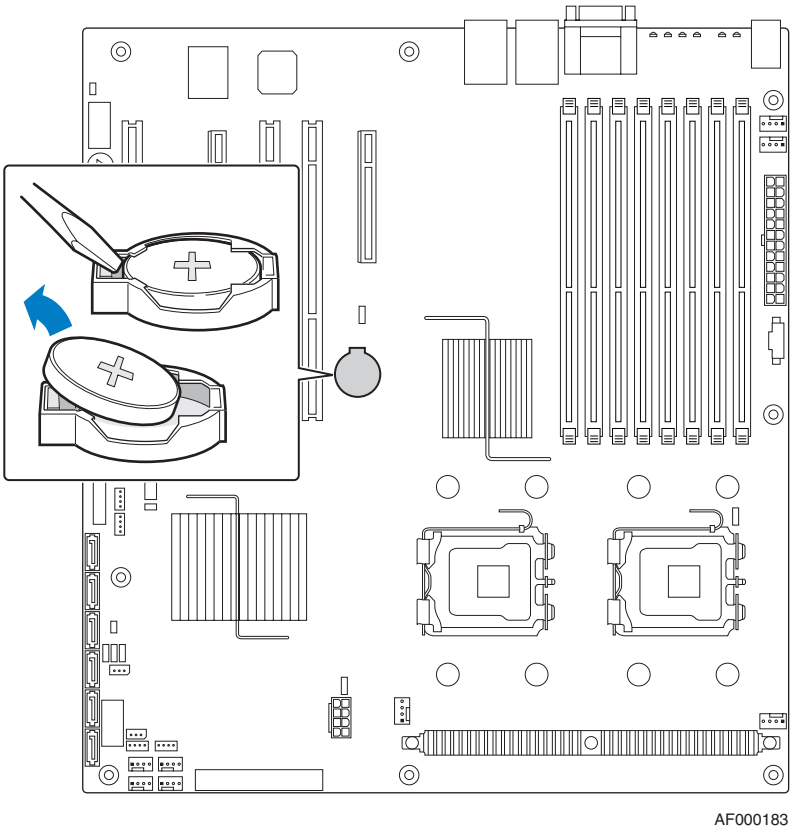

Figure 14. Replacing the Backup Battery (S5000VSASATA/ S5000VSASATAR shown)

7. Dispose of the battery according to local ordinance.
8. Remove the new lithium battery from its package, and, being careful to observe the correct polarity, insert it in the battery socket.
9. Close the chassis.
10. Run Setup to restore the configuration settings to the RTC.

Appendix A: Getting Help

World Wide Web

http://support.intel.com/support/motherboards/server/S5000VSA.

Telephone

All calls are billed US $25.00 per incident, levied in local currency at the applicable credit card exchange rate plus applicable taxes. (Intel reserves the right to change the pricing for telephone support at any time without notice).

Before calling, fill out an "Intel® Server Issue Report Form". A sample form is provided on the following pages. However, for the fastest service, please submit your form via the Internet.

For an updated support contact list, see http://www.intel.com/support/9089.htm/

U.S. and Canada

916-377-7000

Europe

Belgium 02 714 3182

Denmark ... 38 487077

Finland 9 693 79297

France..... 01 41 918529

Germany ... 069 9509 6099

Holland..... 020 487 4562

Italy..... 02 696 33276

Norway 23 1620 50

Spain..... 91 377 8166

Sweden..... 08 445 1251

UK..... 870 6072439

In Asia-Pacific Region

Australia.... 1800 649931

Cambodia.. 63 2 636 9797 (via Philippines)

China ..... 800 820 1100 (toll-free)

..... 8 621 33104691 (not toll-free)

Hong Kong 852 2 844 4456

India..... 0006517 2 68303634 (manual toll-free. You need an IDD-equipped telephone)

Indonesia... 803 65 7249

Korea 822 767 2595

Malaysia 1 800 80 1390

Myanmar... 63 2 636 9796 (via Philippines)

New Zealand 0800 444 365

Pakistan..... 632 63684 15 (IDD via Philippines)

Philippines 1 800 1 651 0117

Singapore .. 65 6213-1311

Taiwan 2 2545-1640

Thailand 1 800 631 0003

Vietnam ..... 632 6368416 (IDD via Philippines)

Japan

Domestic.... 0120 868686

Outside country 81 298 47 0800

Latin America

Argentina .. Contact AT&T USA at 0-800 222 1288. Once connected, dial 800 843 4481

Brazil 001-916 377 0180

Chile

Easter Island. ..... Contact AT&T USA at 800 800 311. Once connected, dial 800 843 4481

Mainland and Juan .. Contact AT&T USA at 800 225 288. Once connected, dial 800 843 4481

Colombia ... Contact AT&T USA at 01 800 911 0010. Once connected, dial 800 843 4481

Costa Rica . Contact AT&T USA at 0 800 0 114 114. Once connected, dial 800 843 4481

Ecuador

(Andimate) .... Contact AT&T USA at 1 999 119. Once connected, dial 800 843 4481

(Pacifictel) ..... Contact AT&T USA at 1 800 225 528. Once connected, dial 800 843 4481

Guatemala . Contact AT&T USA at 99 99 190. Once connected, dial 800 843 4481

Mexico ..... Contact AT&T USA at 001 800 462 628 4240. Once connected, dial 800 843 4481

Miami 1 800 621 8423

Panama..... Contact AT&T USA at 00 800 001 0109. Once connected, dial 800 843 4481

Paraguay ... 001 916 377 0114

Peru 001 916 377 0114

Uruguay..... 001 916 377 0114

Venezuela... Contact AT&T USA at 0 800 2255 288. Once connected, dial 800 843 4481

Appendix B: Regulatory and Compliance Information

Product Regulatory Compliance

Product Safety Compliance

The Intel® Server Board S5000VSAcomplies with the following safety requirements:

- UL60950 - CSA 60950 (USA / Canada)
- EN60950 (Europe)
- IEC60950 (International)
- CB Certificate & Report, IEC60950 (report to include all country national deviations)
- CE - Low Voltage Directive 73/23/EEE (Europe)

Product EMC Compliance - Class A Compliance

The Intel® Server Board S5000VSA has been has been tested and verified to comply with the following electromagnetic compatibility (EMC) regulations when installed a compatible Intel® host system. For information on compatible host system(s) see Intel's Server Builder Web site or contact your local Intel representative.

- FCC /ICES-003 - Emissions (USA/Canada) Verification
- CISPR 22 - Emissions (International)
- EN55022 - Emissions (Europe)
- EN55024 - Immunity (Europe)
- CE - EMC Directive 89/336/EEC (Europe)
- VCCI Emissions (Japan)
- AS/NZS 3548 Emissions (Australia / New Zealand)
- BSMI CNS13438 Emissions (Taiwan)
- RRL MIC Notice No. 1997-41 (EMC) & 1997-42 (EMI) (Korea)

Certifications / Registrations / Declarations

- UL Certification (US/Canada)
- CE Declaration of Conformity (CENELEC Europe)
- FCC/ICES-003 Class A Attestation (USA/Canada)
- C-Tick Declaration of Conformity (Australia)
- MED Declaration of Conformity (New Zealand)
- BSMI Certification (Taiwan)
- RRL Certification (Korea)
- Ecology Declaration (International)

Product Regulatory Compliance Markings

This product is marked with the following Product Certification Markings:

Table 5. Product Certification Markings

Regulatory Compliance	Region	Marking
UL Mark	USA/Canada	
CE Mark	Europe	
EMC Marking (Class A)	Canada	CANADA ICES-003 CLASS A CANADA NMB-003 CLASSE A
BSMI Marking (Class A)	Taiwan	警告使用者： 這是甲類的資訊產品，在居住的環境中使用時，可能會造成射頻干擾，在這種情況下，使用者會被要求採取某些適當的對策
Ctick Marking	Australia / New Zealand	
RLL MIC Mark	Korea	인증번호: CPU See the regulatory information document for additional information.

Electromagnetic Compatibility Notices

FCC (USA)

This device complies with Part 15 of the FCC Rules. Operation is subject to the following two conditions: (1) this device may not cause harmful interference, and (2) this device must accept any interference received, including interference that may cause undesired operation.

For questions related to the EMC performance of this product, contact:

```
Intel Corporation
5200 N.E. Elam Young Parkway
Hillsboro, OR 97124-6497
1-800-628-8686
```

This equipment has been tested and found to comply with the limits for a Class A digital device, pursuant to Part 15 of the FCC Rules. These limits are designed to provide reasonable protection against harmful interference in a residential installation. This equipment generates, uses, and can radiate radio frequency energy and, if not installed and used in accordance with the instructions, may cause harmful interference to radio communications. However, there is no guarantee that interference will not occur in a particular installation. If this equipment does cause harmful interference to radio or television reception, which can be determined by turning the equipment off and on, the user is encouraged to try to correct the interference by one or more of the following measures:

- Reorient or relocate the receiving antenna.
- Increase the separation between the equipment and the receiver.
- Connect the equipment to an outlet on a circuit other than the one to which the receiver is connected.
- Consult the dealer or an experienced radio/TV technician for help.

Any changes or modifications not expressly approved by the grantee of this device could void the user's authority to operate the equipment. The customer is responsible for ensuring compliance of the modified product.

Only peripherals (computer input/output devices, terminals, printers, etc.) that comply with FCC Class A or B limits may be attached to this computer product. Operation with noncompliant peripherals is likely to result in interference to radio and TV reception.

All cables used to connect to peripherals must be shielded and grounded. Operation with cables, connected to peripherals, that are not shielded and grounded may result in interference to radio and TV reception.

ICES-003 (Canada)

Cet appareil numérique respecte les limites bruits radioélectriques applicables aux appareils numériques de Classe A prescrites dans la norme sur le matériel brouilleur: “Apparelis Numériques”, NMB-003 édictee par le Ministre Canadian des Communications.

This digital apparatus does not exceed the Class A limits for radio noise emissions from digital apparatus set out in the interference-causing equipment standard entitled: “Digital Apparatus,” ICES-003 of the Canadian Department of Communications.

Europe (CE Declaration of Conformity)

This product has been tested in accordance too, and complies with the Low Voltage Directive (73/23/EEC) and EMC Directive (89/336/EEC). The product has been marked with the CE Mark to illustrate its compliance.

VCCI (Japan)

この装置は、情報処理装置等電波障害自主規制協議会（ＶＣＣＩ）の基準に基づくクラスＢ情報技術装置です。この装置は、家庭環境で使用することを目的としていますが、この装置がラジオやテレビジョン受信機に近接して使用されると、受信障害を引き起こすことがあります。
取扱説明書に従って正しい取り扱いをして下さい。

English translation of the notice above:

This is a Class B product based on the standard of the Voluntary Control Council for Interference (VCCI) from Information Technology Equipment. If this is used near a radio or television receiver in a domestic environment, it may cause radio interference. Install and use the equipment according to the instruction manual.

BSMI (Taiwan)

The BSMI Certification Marking and EMC warning is located on the outside rear area of the product.

警告使用者：
這是甲類的資訊產品，在居住的環境中使用時，
可能會造成射頻干擾，在這種情況下，使用者會
被要求採取某些適當的對策

RRL (Korea)

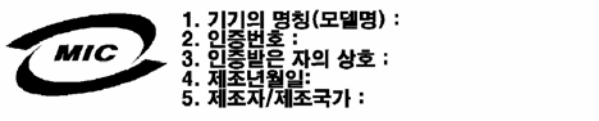

English translation of the notice above:

1. Type of Equipment (Model Name): On License and Product
2. Certification No.: On RRL certificate. Obtain certificate from local Intel representative
3. Name of Certification Recipient: Intel Corporation
4. Date of Manufacturer: Refer to date code on product
5. Manufacturer/Nation: Intel Corporation/Refer to country of origin marked on product

Product Ecology Change (EU RoHS)

Intel has a system in place to restrict the use of banned substances in accordance with the European Directive 2002/95/EC. Compliance is based on declaration that materials banned in the RoHS Directive are either (1) below all applicable threshold limits or (2) an approved / pending RoHS exemption applies.

RoHS implementation details are not fully defined and may change.

Threshold limits and banned substances are noted below:

- Quantity limit of 0.1% by mass (1000 PPM) for:
  - Lead
  - Mercury
  - Hexavalent Chromium
  - Polybrominated Biphenyls Diphenyl Ethers (PBDE)
- Quantity limit of 0.01% by mass (100 PPM) for:
  - Cadmium

Product Ecology Change (CRoHS)

CRoHS (China RoHS, or Ministry of Information Industry Order #39, "Management Methods for Controlling Pollution by Electronic Information Products."):

- China bans the same substances and limits as noted for EU RoHS; however require product marking and controlled substance information Environmental Friendly Usage Period (EFUP) Marking Is defined in number of years in which controlled listed substances will not leak or chemically deteriorate while in the product. Intel understands the end-seller (entity placing product into market place) is responsible for providing EFUP marking.
- Intel "retail" products are provided with EFUP marking
- For "Business to Business" products, Intel intends to place EFUP marking on product for customer convenience
- EFUP for Intel server products has been determined as 20 years.

Below is an example of EFUP mark applied to Intel server products.

CRoHS Substance Tables

China CRoHS requires products to be provided with controlled substance information. Intel understands the end-seller (entity placing product into market place) is responsible for providing the controlled substance information. Controlled substance information is required to be in Simplified Chinese. Substance table for this board product is as follows:

关于符合中国《电子信息产品污染控制管理办法》的声明

Management Methods on Control of Pollution from

Electronic Information Products

(China RoHS declaration)

产品中有毒有害物质的名称及含量

部件名称 (Parts)	有毒有害物质或元素					
	铅 (Pb)	汞 (Hg)	镉 (Cd)	六价铬 (Cr6+)	多溴联苯 (PBB)	多溴二苯醚 (PBDE)
金属部件 Metal Parts	○	○	○	×	○	○
印刷板组件 Printed Board Assemblies (PBA)	×	○	○	○	○	○

○：表示该有毒有害物质在该部件所有均质材料中的含量均在 SJ/T 11363-2006 标准规定的限量要求以下。

○：Indicates that this hazardous substance contained in all homogeneous materials of this part is below the limit requirement in SJ/T 11363-2006.

×：表示该有毒有害物质至少在该部件的某一均质材料中的含量超出 SJ/T 11363-2006 标准规定的限量要求。

×：Indicates that this hazardous substance contained in at least one of the homogeneous materials of this part is above the limit requirement in SJ/T 11363-2006.

对销售之日的所售产品,本表显示我公司供应链的电子信息产品可能包含这些物质。注意：在所售产品中可能会也可能不会含有所有所列的部件

This table shows where these substances may be found in the supply chain of our electronic information products, as of the date of sale of the enclosed product. Note that some of the component types listed above may or may not be a part of the enclosed product.

China Packaging Recycle Marks (or GB18455-2001)

Intel EPSD has the following ecological compliances:

Cardboard and fiberboard packaging will be marked as recyclable in China.

China Packaging Recycling Marks is required on retail packaging to be marked as recyclable using China's recycling logo. Due to regional variances in mark acceptances, all three marks accepted worldwide will be implemented on Intel's cardboard and fiberboard. Examples of marks are shown below.

CA Perchlorate Warning

CA Lithium Perchlorate Warning (California Code of Regulations, Title 22, Division 4.5, Chapter 33: Best Management Practices for Perchlorate Materials):

The State of California requires a warning to be included for products containing a device using Lithium Perchlorate.

Intel understands CA Lithium Perchlorate require a printed warning to be included with all products containing a Lithium battery, either as an insert, in existing product literature, or as part of the shipping memo wording.

Wording is as follows:

Perchlorate Material - special handling may apply. See www.dtsc.ca.gov/hazardouswaste/perchlorate

This notice is required by California Code of Regulations, Title 22, Division 4.5, Chapter 33: Best Management Practices for Perchlorate Materials. This product/part includes a battery that contains Perchlorate material.

End-of-Life / Product Recycling

Product recycling and end-of-life take-back systems and requirements vary by country. Contact the retailer or distributor of this product for information about product recycling and / or take-back.

Appendix C: Troubleshooting

This chapter helps you identify and solve problems that might occur while you are using the system.

For any issue, first ensure you are using the latest firmware and files. Firmware upgrades include updates for BIOS, the baseboard management controller (BMC), and the hot-swap controller (HSC). See “Additional Information and Software” for a link to the software updates. In addition to the server firmware and files, also update any drivers used for components you have installed in your system, such as video drivers, network drivers, and SCSI drivers.

Intel provides a package called the "Platform Confidence Test" that may help with your diagnostics. See “Additional Information and Software” for a link to this software.

If you are unable to resolve your server problems on your own, see “Getting Help” for assistance.

Resetting the System

Before going through in-depth troubleshooting, attempt first to perform reset your system using one of the methods below.

Table 6. Resetting the System

To do this	Press
Soft boot reset to clear the system memory and reload the operating system	<Ctrl+Alt+Del>
Clear system memory, restart POST, and reload the operating system	Reset button
Cold boot reset. Turn the system power off and then on. This clears system memory, restarts POST, reloads the operating system, and halts power to all peripherals	Power off/on button

Problems following Initial System Installation

Problems that occur at initial system startup are usually caused by an incorrect installation or configuration. Hardware failure is a less frequent cause. If the problem you are experiencing is with a specific software application, see “Problems with Newly Installed Application Software”.

First Steps Checklist

- Is AC power available at the wall outlet?
- Are the power supplies plugged in? Check the AC cable(s) on the back of the chassis and at the AC source.
- Are all cables correctly connected and secured?
- Are the processors fully seated in their sockets on the server board?
- Are all standoffs in the proper location and not touching any components, causing a potential short?
- Are all add-in PCI boards fully seated in their slots on the server board?
- Are all jumper settings on the server board correct?
- Are all jumper and switch settings on add-in boards and peripheral devices correct? To check these settings, refer to the manufacturer's documentation that comes with them. If applicable, ensure that there are no conflicts-for example, two add-in boards sharing the same interrupt.
- Are all peripheral devices installed correctly?
- If the system has a hard disk drive, is it properly formatted or configured?
- Are all device drivers properly installed?
- Are the configuration settings made in Setup correct?
- Is the operating system properly loaded? See the operating system documentation.
- Did you press the system power on/off switch on the front panel to turn the server on (power on light should be lit)?
- Is the system power cord properly connected to the system and plugged into a NEMA 5 15R outlet for 100-120V or a NEMA 6-15R outlet for 200-240V ?
- Are all integrated components from the tested components lists? Check the tested memory, and chassis lists, as well as the supported hardware and operating system list. See "Additional Information and Software" for links to the tested component lists.

Hardware Diagnostic Testing

This section provides a more detailed approach to identifying a hardware problem and locating its source.

Caution: *Turn off devices before disconnecting cables: Before disconnecting any peripheral cables from the system, turn off the system and any external peripheral devices. Failure to do so can cause permanent damage to the system and/or the peripheral devices.*

1. Turn off the system and all external peripheral devices. Disconnect each device from the system, except for the keyboard and the video monitor.
2. Make sure the system power cord is plugged into a properly grounded AC outlet.

3. Make sure your video display monitor and keyboard are correctly connected to the system. Turn on the video monitor. Set its brightness and contrast controls to at least two thirds of their maximum ranges (see the documentation supplied with your video display monitor).
4. If the operating system normally loads from the hard disk drive, make sure there is no diskette in drive A and no CD-ROM disk in the CD-ROM drive.
5. If the power LED does light, attempt to boot from a CD-ROM disk.
6. Turn on the system. If the power LED does not light, see "Power Light Does Not Light".

Verifying Proper Operation of Key System Lights

As POST determines the system configuration, it tests for the presence of each mass storage device installed in the system. As each device is checked, its activity light should turn on briefly. Check for the following:

- Does the diskette drive activity light turn on briefly? If not, see "CD-ROM Drive or

Appendix D: Intel® Server Issue Report Form

Note: *An on-line / automatic submission version of this form is available at http://support.intel.com/support/motherboards/server/S5000SVA/. For the fastest service, please submit your form via the Internet.*

Date Submitted: _____

Company Name: _____

Contact Name: _____

Email Address: _____

Intel Server Product: _____

Priority (Critical, Hot, High, Low): _____

Brief Problem Description. Provide a brief description below. See the last page for space to include a detailed problem description.

_____

_____

_____

_____

_____

Board / Chassis Information

Baseboard Revision - PBA#: _____

Baseboard Serial Number: _____

Chassis Model: _____

CPU1 Speed/Stepping/Spec: _____

CPU2 Speed/Stepping/Spec: _____

System BIOS Version: _____

HSC Firmware Version: _____

DIMM Configuration

DIMM A1 MB and Vendor / part number: _____

DIMM A2 MB and Vendor / part number: _____

DIMM A3 MB and Vendor / part number: _____

DIMM A4 MB and Vendor / part number: _____

DIMM B1 MB and Vendor / part number: _____

DIMM B2 MB and Vendor / part number: _____

DIMM B3 MB and Vendor / part number: _____

DIMM B4 MB and Vendor / part number: _____

Operating System Information

Operating System:_____

Version: _____

Service Pack:_____

Add-in Card, Peripheral, Video, NIC

Check each box below as applicable, and provide the requested information.

Peripheral Card or Peripheral Description Driver Revision IRQ # I/O Base Address NIC

Peripheral	Description	Driver Revision	IRQ	I/O Base Address	FW Revision
PCI 32/33					
PCI Slot 1					
PCIe* x4					
PCI Slot 3					
PCI Slot 6					
PCI-X* 64/133					
PCI Slot 4					
PCI Slot 5					
Video					
On-board Video					

Peripheral	Description	Driver Revision	IRQ	I/O Base Address	FW Revision
Add-in Video					
NIC					
On-Board NIC1					
On-Board NIC2					

Hard Drive Information

Drive Type (SATA, SAS, etc.)	Make/Model	Hot-swap or Fixed	IRQ	FW Revision

Management Information

On-Board Platform Instrumentation only _____

Intel® System Management _____

Control Panel Information

Standard Control Panel _____

Intel® Local Control Panel_____

Complete Problem Description

In the space below, provide a complete description of the steps used to reproduce the problem or a complete description of where the problem can be found. Please also include any details on troubleshooting already done.