The New Wave in PCs & Servers

AQUANTA™

CP Series Upgrade and Configuration Guide

Aquanta CP
CWP 50021
July 1997

UNISYS

The names, places, and/or events used in this publication are not intended to correspond to any individual, group, or association existing, living, or otherwise. Any similarity or likeness of the names, places, and/or events with the names of any individual, living or otherwise, or that of any group or association is purely coincidental and unintentional.

NO WARRANTIES OF ANY NATURE ARE EXTENDED BY THIS DOCUMENT. Any product or related information described herein is only furnished pursuant and subject to the terms and conditions of a duly executed agreement to purchase or lease equipment or to license software. The only warranties made by Unisys, if any, with respect to the products described in this document are set forth in such agreement. Unisys cannot accept any financial or other responsibility that may be the result of your use of the information in this document or software material, including direct, special, or consequential damages.

You should be very careful to ensure that the use of this information and/or software material complies with the laws, rules, and regulations of the jurisdictions with respect to which it is used.

This document is not a contract and does not create any representations or warranties by Unisys. All applicable representations, warranties and covenants are contained only in the applicable agreement signed by the parties. The information contained herein is subject to change without notice. Revisions may be issued to advise of such changes and/or additions.

RESTRICTED – Use, reproduction, or disclosure is restricted by DFARS 252.227–7013 and 252.211–7015/FAR 52.227–14 & 52.227–19 for commercial computer software.

FCC Statement

The statement below is included in this document to comply with a Federal Communications Commission (FCC) regulation. The FCC is an agency of the United States government; thus, the statement below applies to computing equipment installed in the United States of America. Unisys is taking appropriate steps to be in compliance with FCC regulations and similar regulations of other countries.

WARNING: This equipment has been tested and found to comply with the limits for a Class B digital device, pursuant to Subpart J of Part 15 of FCC Rules. These limits are designed to provide reasonable protection against harmful interference in a residential installation. This equipment generates and uses radio frequency energy and, if not installed and used in accordance with the instructions, may cause harmful interference to radio and television reception. However, there is no guarantee that interference will not occur in a particular installation. If this equipment does cause harmful interference to radio or television reception, which can be determined by turning the equipment off and on, the user is encouraged to try to correct the interference by one or more of the following measures:

- Reorient or relocate the receiving antenna.
- Increase the separation between the equipment and receiver.
- Connect the equipment into an outlet on a circuit different from that to which the receiver is connected.
- Consult the dealer or an experienced radio/television technician for help.

This document is not a contract and does not create any representations or warranties by Unisys. All applicable representations, warranties and covenants are contained only in the applicable agreement signed by the parties.

Correspondence regarding this publication should be forwarded to Unisys Corporation either by addressing remarks to Multimedia Publishing, MS 18-007, Unisys Corporation, 2700 N. 1st Street, San Jose, CA 95134–2028 U.S.A. or by sending electronic mail to csgpi@po3.bb.unisys.com.

This Class B digital apparatus meets all requirements of the Canadian Interference-Causing Equipment Regulations.

Cet apparell numérique de la classe B respecte toutes les exigences du Règlement sur le matèriel brouilleur du Canada.

Copyright © 1997 Unisys Corporation. All rights reserved.
Unisys is a registered trademark and Aquanta is a trademark of Unisys Corporation. Pentium is a registered trademark of Intel Corporation.

Contents

About This Guide

Who Should Use This Guide xi
Organization xi
Conventions xii
Related Product Information xii

Section 1. Upgrading Your System

Preliminary Notes 1–2
Avoiding Electrostatic Discharge 1–3
Removing and Replacing the System Unit Cover 1–4
Removing and Replacing the Front Panel 1–6
Upgrading the Processor 1–7
Removing the Old Processor 1–8
Installing the New Processor 1–10
Confirm the Success of the Installation 1–10
DRAM Memory 1–11
Upgrading DRAM Memory 1–12
Removing SIMMs 1–13
Installing SIMMs 1–14
Upgrading Video Memory 1–15
Pipeline-Burst Cache Memory 1–16
Adding Feature Boards 1–16
Installing Feature Boards 1–17
Adding Drives 1–19
Installing a CD-ROM Drive 1–19
Upgrading Your 3.5-Inch Hard Drive 1–21
Connecting Peripherals to the System Unit 1–23
Where to Go From Here 1–24

Section 2. Configuring Your System

BIOS Setup Utility 2–1
Starting the BIOS Setup Utility 2–2
Changing the BIOS Settings 2–3
Exiting the BIOS Setup Utility 2–3
Preloaded Software 2–3
Installing Additional Software 2–4
Installing Application Software 2–4
Installing Hardware Device Drivers 2–4
Where to Go From Here 2–4

Section 3. Troubleshooting

What to Do When a BIOS Password is Forgotten 3–2
Typical Startup Sequence 3–2
Solving Workstation Problems 3–4
Preliminary Checks 3–4
Troubleshooting an Installation Problem 3–5
Common Problems 3–7
Components You Can Replace 3–12
POST Beep Codes and Error Messages 3–13
POST Beep Codes 3–13
POST Messages 3–14

Appendix A. System Specifications

Processor A–1
PC AT Compatible Bus A–1
PCI Local Bus A–1
System Board Memory A–2
Second Level Cache A–3
Level One Cache A–3
BIOS A–3
Two-Level Password Security A–4
Power Management Enhancements A–4
BIOS Setup and CMOS Configuration A–4
Plug and Play Enhancement A–4
3-Mode FDD Support A–4
CD-ROM Bootable A–5
System Board Jumper Settings A–5
System I/O Addresses Map A–5

System Memory Map A–7
Keyboard Interface A–8
Mouse Interface A–8
Parallel Port Interface A–9
Serial Port Interfaces A–10
Sound Controller (Optional) A–11
USB Interfaces A–13
Power LED, Power Switch, Hard Disk Drive LED A–14
Direct Memory Access A–14
Interrupts A–15
Counter/Timer A–16
Time of Day Clock/CMOS RAM and Battery A–16
Mass Storage A–16
Floppy Disk Drives A–17
IDE Hard Disk and CD-ROM Interface Configuration A–18
Video Subsystem A–20
Video Pin Assignments A–20
Power Supply Assembly A–21
On/Off Switch A–22
Fan A–22
Reset Button A–22
Suspend Button A–23
Speaker A–23
Dimensions A–23
Printed Circuit Board A–23
Security Lock A–23
Maximum Size for Add-On Cards A–24
Supported Operating Systems A–24
MS-DOS 6.22 ..... A–24
Windows for Workgroups 3.11 ..... A–24
OS/2 ..... A–25
SCO UNIX A–25
Netware 3.12 and 4.10 ..... A–25
Windows NT 3.51/ 4.0 ..... A–25
Windows 95 ..... A–25
Unixware A–25
Operating Environment A–26
Non-Operating Environment A–26
Shipping Specifications A–27

Index

Figures

1–1. Removing and Replacing the System Unit Cover 1–5
1–2. Removing and Replacing the Front Panel 1–6
1–3. Installing a Processor Chip 1–9
1–4. Sample System Configuration Screen 1–11
1–5. Removing/Installing a SIMM 1–13
1–6. Upgrading Video Memory 1–15
1–7. Installing a Feature Board 1–18
1–8. Installing a CD-ROM Drive 1–20
1–9. Installing a 3.5-Inch Hard Drive 1–22
1–10. System Unit Back Panel 1–23
2–1. BIOS Setup – Main Menu 2–2

Tables

1–1. DRAM SIMM Allowable Configurations 1–12

3–1. Troubleshooting Guide 3–7
3–2. POST Messages 3–14

A–1. Supported SIMM Modules A–2
A–2. System I/O Address Map A–5
A–3. System Memory Map A–7
A–4. Keyboard Parameters A–8
A–5. Mouse Parameters A–8
A–6. Parallel Port Parameters A–9
A–7. Serial Port Parameters A–10
A–8. MIDI/Game Port Parameters A–12
A–9. USB Interface Parameters A–13
A–10. Header CN21 Parameters A–14
A–11. DMA Pin Parameters A–14
A–12. Interrupt Functions A–15
A–13. Programmable Counter/Timers A–16
A–14. Floppy Port Parameters A–17
A–15. IDE Parameters A–18
A–16. VGA Connector Parameters A–20
A–17. Power Supply Voltages A–21
A–18. CN1 Power Supply Parameters A–22
A–19. Dimensions and Weights A–23
A–20. Operating Environment A–26
A–21. Non-operating Environment A–26
A–22. Shipping Specification A–27
A–23. Shock Parameters A–27

About This Guide

The *Aquanta CP Series Upgrade and Configuration Guide* for the CWP 50021 tells you how to upgrade the hardware, change the BIOS settings, and troubleshoot a CWP 50021 system. This guide also provides detailed technical specifications for your system.

Who Should Use This Guide

This guide assumes that you are a computer technician, network administrator, or hardware engineer. If you are an end user, you should seek the help of a professional to perform the steps described in this guide.

Organization

This guide is organized as follows:

Section 1. Upgrading Your System

This section explains how to upgrade your system hardware, including adding more memory, feature boards, and various types of disk drives.

Section 2. Configuring Your System

This section describes the BIOS Setup utility and how to change the BIOS settings after you've upgraded your hardware. It also discusses preloaded software, applications, and device drivers.

Section 3. Troubleshooting Your System

This section describes troubleshooting methodology, advanced solutions to common installation problems, and POST (Power On Self Test) beep codes and messages.

Appendix A.System Specifications

This appendix provides detailed specifications for your system, including electrical and environmental specifications, the memory map, I/O address map, system interrupt assignments, and Direct Memory Access (DMA) channels.

Conventions

To simplify discussion, this guide uses the following conventions:

- The terms “workstation” and “system” are used interchangeably.
- “motherboard” and “system board” are used interchangeably.
- The term “connector” refers to the plug at either end of a cable. The term “receptacle” refers to plug-ins located on the body of a device.
- Some of the information in BIOS Setup menus may include variables. To distinguish the variables from the surrounding text, all variables are expressed in italics.
- Keys that you press or characters that you enter are expressed in bold typeface. Here are some examples:

  Delete

  Enter **0** in the field.
- To issue certain commands, you need to hold down one or more keys while you press another key. This type of key combination is expressed as follows:

  Shift+Enter

  Ctrl+Alt+Delete

Related Product Information

The following documents are provided for the release of the CWP 50021.

Title	Audience	Part Number
Aquanta CP Series Quick Start	end users	3814 9761-000
Aquanta CP Series Configuration Label	technicians	3816 0651-000
Aquanta User Information and Troubleshooting Guide	end users	4618 8660-000

Section 1
Upgrading Your System

This section provides instructions on how to upgrade your system. The following topics are covered:

- Avoiding electrostatic discharge
- Removing and replacing the system unit cover
- Upgrading the processor
- Upgrading system memory
- Pipeline-burst cache memory
- Adding feature boards
- Adding drives
- Connecting peripherals to the system unit

Preliminary Notes

The following apply to all instructions included in this guide:

- When working on your system unit, and after removing the cover, place the unit on a stable, static-free surface.
- When screws are used to secure components, partially tighten all of the screws before completely tightening any one of them. This technique ensures proper alignment.
- Your system has been designed as a modular assembly. Do not force, bend or apply excessive physical force when adding components.
- When performing system upgrades, protect all connectors and wiring from breakage. Do not attempt to stretch the wiring over the metal edges of your system's frame.

Avoiding Electrostatic Discharge

All electronic assemblies contain static-sensitive components, and your system can be damaged by electrostatic discharge (ESD). The risk is greatest when the unit's cover is off, and when components are being removed or added. To minimize this risk, take the following precautions.

Caution

Avoid producing friction static, which occurs most often when walking on new or newly cleaned rugs, or on any rug in a low humidity environment.

- While working on the system, wear an antistatic bracelet.
- Keep static-sensitive components (such as processor chips and video memory chips) in their packages until you are ready to install them.
- Before removing a component from its package, sit down and hold the package in one hand and touch the metal frame of your unit (a ground) with the other. Then, take the component out and install it immediately.
- Handle components by their edges. Avoid touching their leads, connectors, or contact points.
- If you need to remove a component from the system, immediately store it in antistatic packaging.

Removing and Replacing the System Unit Cover

To remove the system unit cover, complete the following steps:

1. Turn the system off. Disconnect the power cord and all peripherals.
2. Place the system unit, with the back panel facing you, on a stable, static-free work surface.
3. Remove the three screws that secure the cover to the back panel, as shown in Figure 1–1.
4. Slide the cover straight back until it clears the chassis.

WARNING

Do not run the system unit with the cover off. Operating without a cover is a safety hazard to you.

The system unit may also short circuit if you run it without a cover.

To replace the system unit cover, complete the following steps:

1. Make sure that your system is turned off, and that the power cord and all peripherals are unplugged.
2. Make sure that your system unit is on a stable, static-free work surface, with the back panel facing you.
3. Rest the tab (located on the top front edge of the cover) inside the rim of the chassis, then lower the cover and slide it forward until all parts are flush.
4. Replace the three screws on the back panel.
5. Reconnect the power cord and all peripherals.

Figure 1–1. Removing and Replacing the System Unit Cover

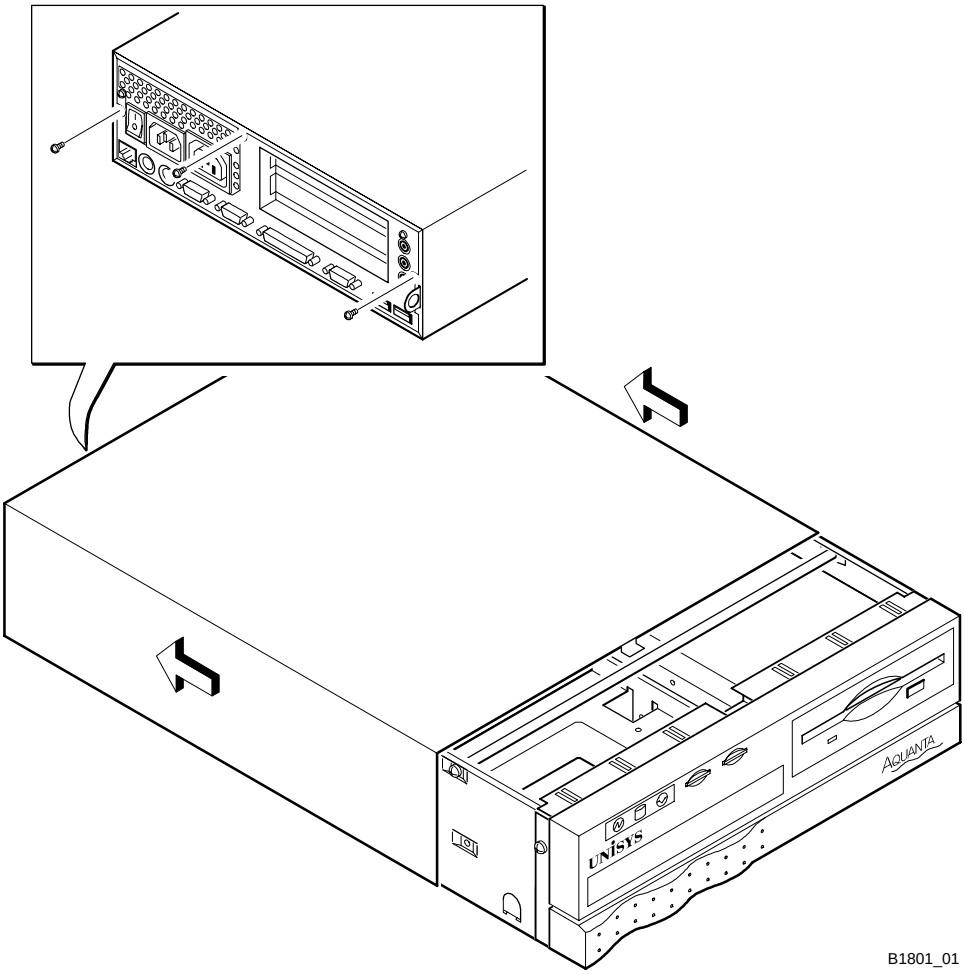

Removing and Replacing the Front Panel

To remove the front panel:

1. Turn the system off. Disconnect the power cord and all peripherals.
2. Remove the system unit cover, as described earlier in this section
3. Remove the power and drive cables from each drive.
4. Remove the four screws that attach the front panel to the chassis. See Figure 1–2 for details.

Figure 1–2. Removing and Replacing the Front Panel

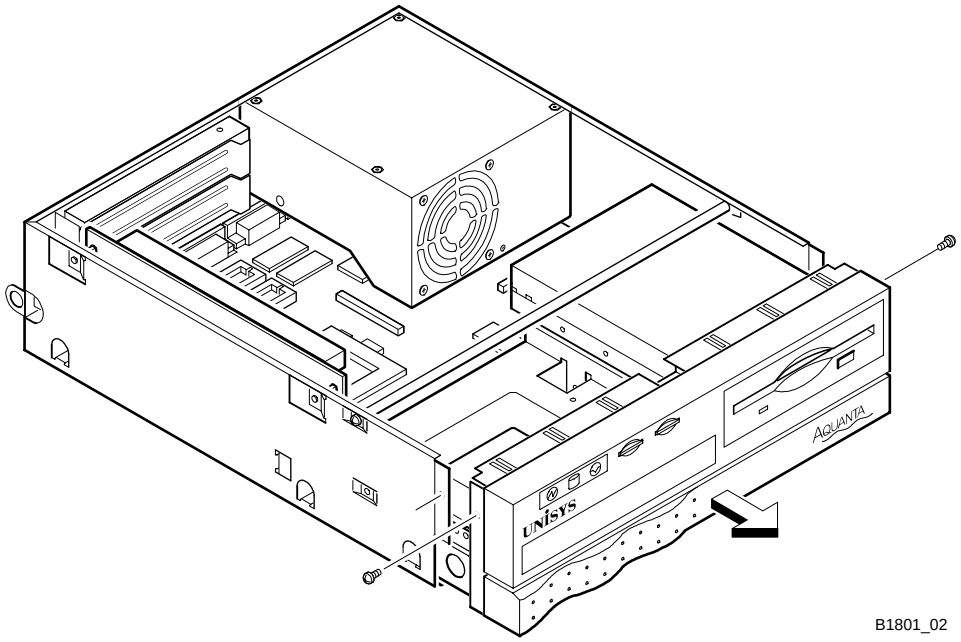

To replace the front panel:

1. Slide the front panel/drive assembly into the chassis until all parts are flush.
2. Replace the four screws that attach the front panel to the chassis.
3. Reconnect the power and drive cables to each drive.
4. Replace the system unit cover, as described earlier in this section.
5. Reconnect the power cords and all peripherals. Turn the system on.

Upgrading the Processor

Your system supports Pentium P54C and P55C processors. The Pentium P54C operates at 75, 90, 100, 120, 133, 150, 166, or 200 MHz. The Pentium P55C operates at 166 or 200 MHz. When you ordered your system, you specified the speed and model of your processor. If you want to upgrade to a faster processor, contact your Unisys Sales Representative for processor availability.

To upgrade your processor, complete the following steps.

Removing the Old Processor

The CPU is attached to the motherboard by a SAZ (screwdriver actuated ZIF) socket. A heat sink is attached to the top of the CPU with latch bands. Refer to Figure 1–3 for details. To remove the old CPU, complete the following steps:

1. Turn the system off. Disconnect the power cord and all peripherals.
2. Remove the system unit cover, as described earlier.

Caution

Protect your system from ESD, as described in “Avoiding Electrostatic Discharge,“ earlier in this section.

3. Locate the heat sink on the motherboard (see Figure 1–3).
4. As needed, remove any feature cards that block access to the heat sink.
5. Press down and then out on one end of the heat sink latch band until it clears its keeper.
6. Press down and out on the other end of the latch band until it clears its keeper.
7. Lift the heat sink off the processor.
8. Insert a screwdriver into the indentation on the right side of the SAZ socket, see Figure 1–3 for details. Gently but firmly swing the end of the screwdriver handle toward the riser card while steadying the CPU.
9. Remove the processor chip from the socket.
10. Wrap the chip in antistatic material and store in a cool, dry place, in case you need it later.

Figure 1–3. Installing a Processor Chip

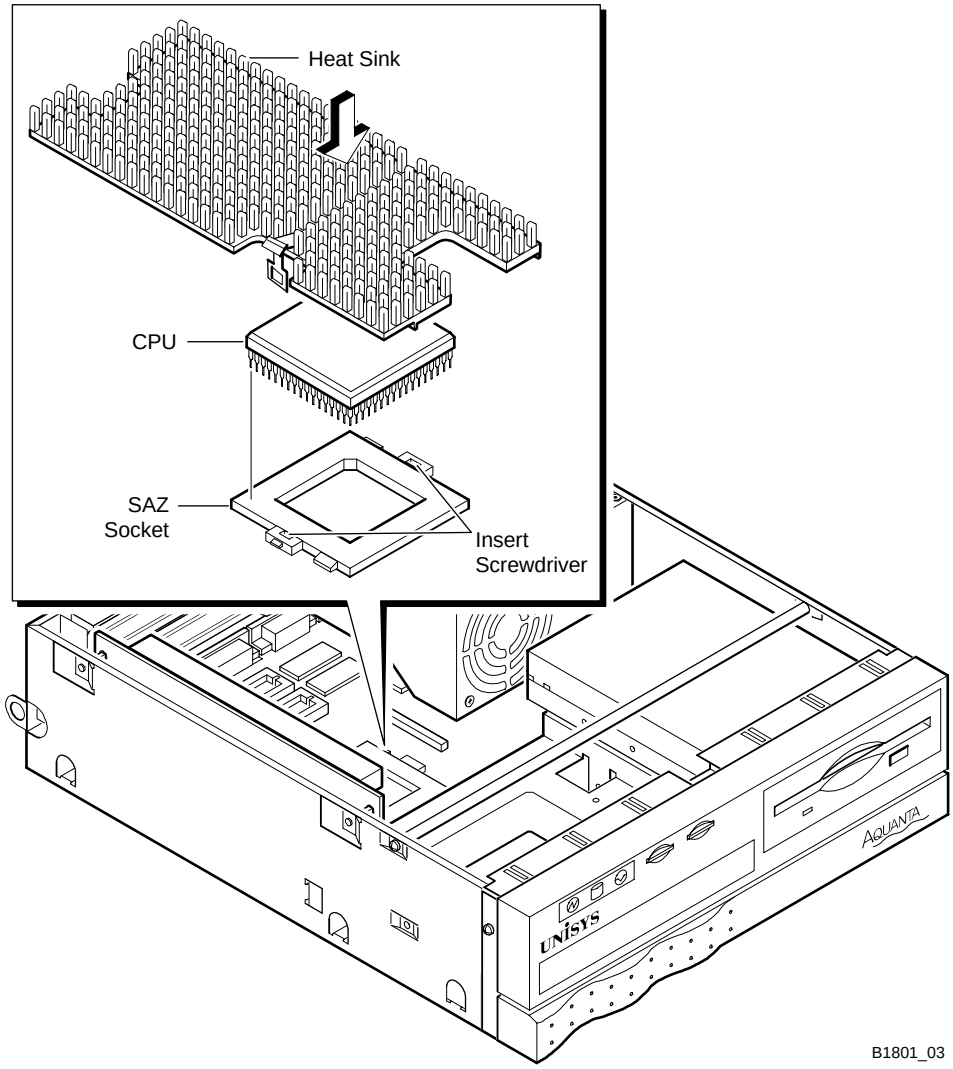

Installing the New Processor

1. Remove the new processor chip from its packaging.
2. Orient the chip as shown in Figure 1–3, aligning the beveled (cut-off) corner of the chip to the corner of the socket that does not have a pin hole.
3. Press down firmly but gently on the top of the chip until it is fully seated.
4. Insert a screwdriver into the indentation on the left side of the SAZ socket, see Figure 1–3 for details. Gently but firmly swing the end of the screwdriver handle toward the power supply while steadying the CPU.
5. Position the heat sink directly above the Pentium chip. Align the ridges on the bottom of the heat sink so they straddle the CPU, then lower the heat sink onto the processor.
6. Hook one end of the latch band over its keeper. Push down on the other end of the latch band until it hooks onto its keeper.
7. Reconfigure jumpers CLK1, CLK2, CLK3, FREQ1, FREQ2, VR1, and VR2 (as needed) for the newly installed processor. Refer to the configuration label, which is located on the bottom of the motherboard, for pin locations.
8. Replace any feature cards you removed earlier.
9. Replace the system unit cover as described earlier.
10. Reconnect the power cord and all peripherals.

Confirm the Success of the Installation

1. Turn the system on.
2. When the System Configuration screen appears, press **Pause**. A sample System Configuration screen is shown in Figure 1–4.
3. Confirm that the speed displayed in "CPU Speed" matches the speed of the processor you just installed.
4. Press any key to continue.
5. If the speed displayed in "CPU Speed" does not match the speed of the processor you just installed, refer to Section 3, "Troubleshooting an Installation Problem."

Figure 1–4. Sample System Configuration Screen

```
                    Phoenix BIOS Setup Utility
CPU Type : Pentium                  System ROM :  F240-FFFF
CPU Speed : 200                     BIOS Date :  06/13/97

System Memory : 640 KB              Bank 0 SIMM :  Fast Page
Extended Memory : 31744 KB          Display Type:  EGA\VGA
Shadow RAM : 384 KB                 PS/2 Mouse :  Installed
Cache RAM : 256 KB
                                    Diskette A :  1.44/1.25 Mb, 3½"
Hard Disk 1 : 1091 Mb               Diskette B :  Disabled
Hard Disk 2 : CD-ROM
                                    PCI Slot 1 IRQ :  None
COM Ports : 03F8 02F8               PCI Slot 2 IRQ :  None
LPT Ports : 0378
                                    On-board LAN IRQ : IRQ 10
                                    On-board VGA IRQ : IRQ 9
```

B1801_04

DRAM Memory

- All memory resides on the system board using industry standard 72-pin SIMM technology.
- SIMMs are 60ns, with tin-lead connectors. You can use either EDO SIMMs or Fast Page SIMMs with parity and ECC mode enabled.
- Two SIMM sockets are provided for base memory.
- The system board is upgradeable to 128MB DRAM on the motherboard.
- SIMMs must be identical in make, type and speed.
- The BIOS automatically recognizes the new amount of memory and it is not necessary to run any set-up program. It recognizes the SIMM with or without parity. By default, the BIOS does not check for parity. However, the CMOS can be set to check for parity, if so desired.

Upgrading DRAM Memory

You can upgrade the system memory by replacing the factory-installed SIMMs with higher-capacity SIMMs.

Caution

Since the SIMMs sockets on your motherboard are tin-plated, use only tin-plated SIMMs when upgrading your system memory. If you use gold-plated SIMMs, your system may become unstable.

To plan your SIMM configuration, refer to Table 1–1. Contact your Unisys Sales Representative for the availability of SIMMs.

Note: *If a 36-bit SIMM is installed, use the "ECC/Parity Config" setting in the BIOS to enable ECC/Parity support.*

Table 1–1. DRAM SIMM Allowable Configurations

SIMM 1	SIMM 2	Total System Memory
4 MB	4 MB	8 MB
8 MB	8 MB	16 MB
16 MB	16 MB	32 MB
32 MB	32 MB	64 MB
64 MB	64 MB	128 MB

Removing SIMMs

To remove a preinstalled SIMM, complete the following steps:

1. Turn the system off. Disconnect the power cord and all peripherals.
2. Remove the system unit cover, as described earlier in this section.
3. Remove the front panel, as described earlier in this section.
4. Locate the SIMM retaining clips. Refer to Figure 1–5.
5. Release the retaining clips holding the SIMM in place.
6. Rock the SIMM away from the motherboard and lift it out of the socket.

Figure 1–5. Removing/Installing a SIMM

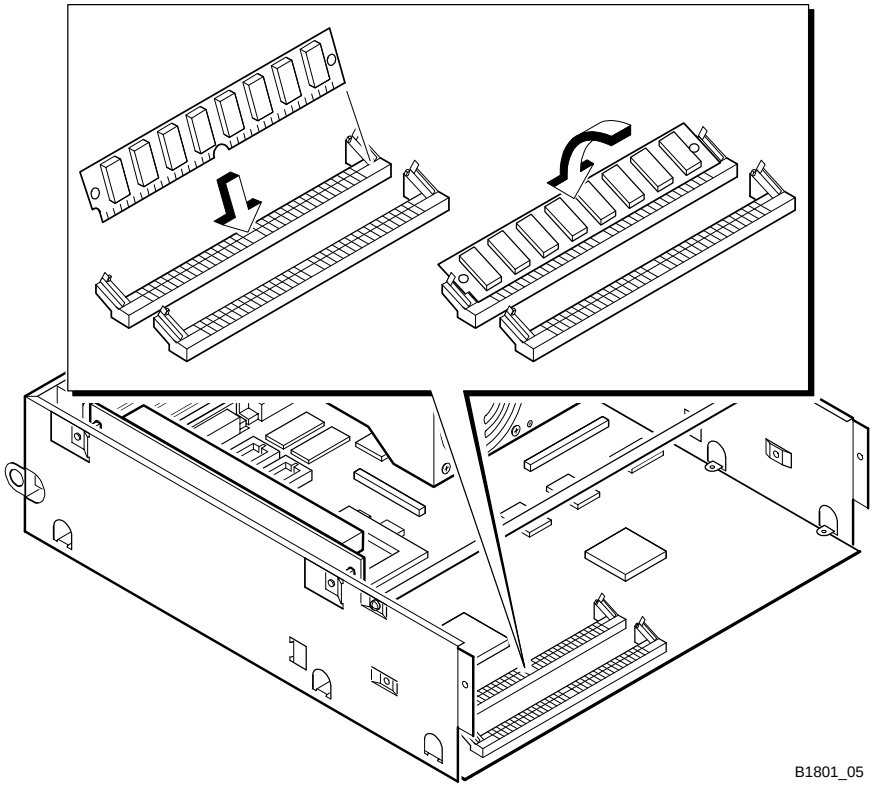

Installing SIMMs

1. Open the first memory upgrade kit and take out the SIMM.
2. Position the SIMM at a 45° angle to the motherboard, as shown in Figure 1–5.

   Note: *SIMMs are keyed and will not seat fully if they are not correctly oriented.*

3. Push the SIMM down into the socket, then rock it toward the motherboard. You will hear a soft click as the retaining clips latch the SIMM into place.
4. Repeat steps 1 through 3 for the installation of the other SIMM.
5. Replace the front panel, as described earlier in this section.
6. Replace the system unit cover, as described earlier in this section, then turn the system on.
7. When the System Configuration Screen appears (see Figure 1–4), press **Pause**.
8. Verify that the System Memory and Extended Memory values displayed add up to the total installed memory.
9. If the System and Extended Memory do not add up to the total memory you just installed, refer to Section 3, “Troubleshooting an Installation Problem.”

Upgrading Video Memory

Your system comes with an S3 64V+, PCI Video Controller built into the motherboard. The EDO video has 1MB of DRAM installed by default, and you can add another 1MB. Refer to Figure 1–6.

Figure 1–6. Upgrading Video Memory

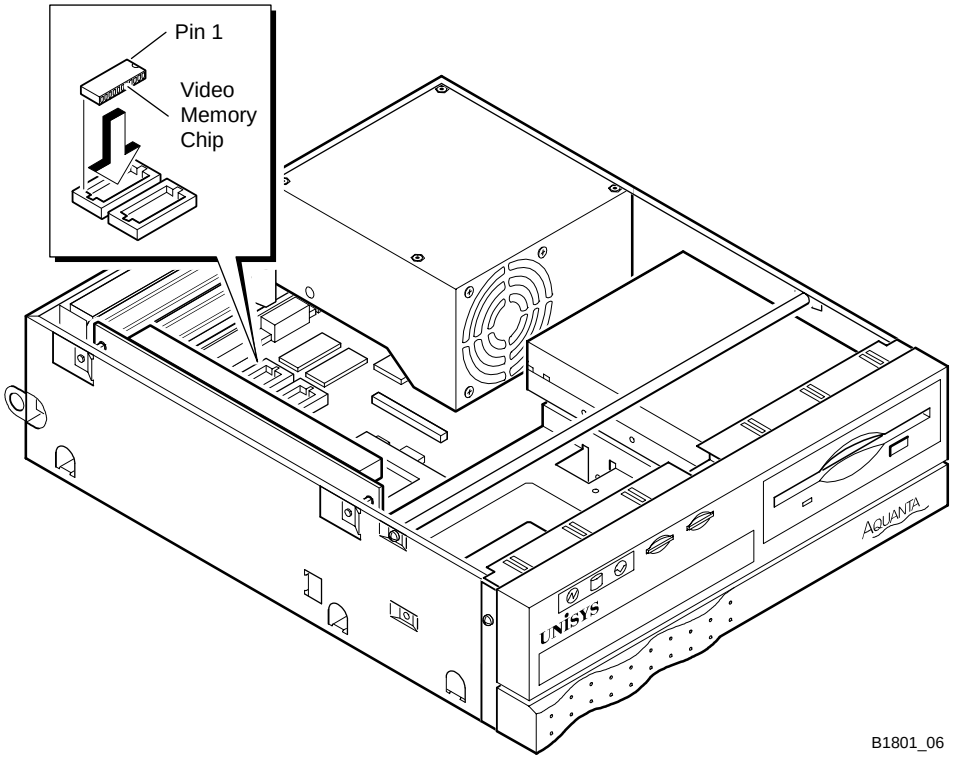

Pipeline-Burst Cache Memory

Cache memory enhances system performance. Your system is equipped with 256KB of cache on the motherboard.

Adding Feature Boards

Your system provides a riser card that supports either two PCI feature boards, or one PCI feature board and one ISA feature board.

- The PCI expansion slots are beige, and shorter than the ISA slot.
- The ISA expansion slot is black, and longer than the PCI slots.
- Feature boards may have switches and jumpers that need to be set before installation. Refer to the board manufacturer's instructions for switch settings and jumper assignments.
- Address and interrupt assignments must be unique for each feature board. Use the BIOS Setup utility, described in Section 2 of this manual, to resolve any conflicts.

Installing Feature Boards

To install a feature board, complete the following steps:

1. Turn the system off. Disconnect the power cord and all peripherals.
2. Remove the system unit cover, as described earlier in this section.
3. Remove the screw that secures the slot bracket to the chassis (shown in Figure 1–7). Set the screw aside for later use.
4. Slide the slot cover out. Save it in case you ever need to remove the feature board.
5. Remove the feature board from its packaging.
6. Refer to the manufacturer's instructions provided with your new board, and set any necessary switches or jumpers on the board.

Caution

Touching the gold connector edge of the board can damage the board. Always follow ESD precautions when handling a feature board.

7. Holding the board by its side and top edges, insert the tip of the board slot cover into its holder, then insert the feature board connectors into the riser card slot.
8. Press the board into the slot until it is evenly and fully seated.
9. Secure the feature board to the chassis by clamping it with the slot bracket, then securing the bracket to the chassis using the screw removed in step 3.

Caution

If you drop the screw into the system unit, be sure to retrieve it before continuing. A loose screw can damage your equipment by causing a short.

10. Replace the system unit cover, as described earlier in this section.

Caution

Do not run your system without either a feature board or slot cover in each of the expansion slots. If you operate the system without these items in place, your workstation can generate electromagnetic interference.

Figure 1–7. Installing a Feature Board

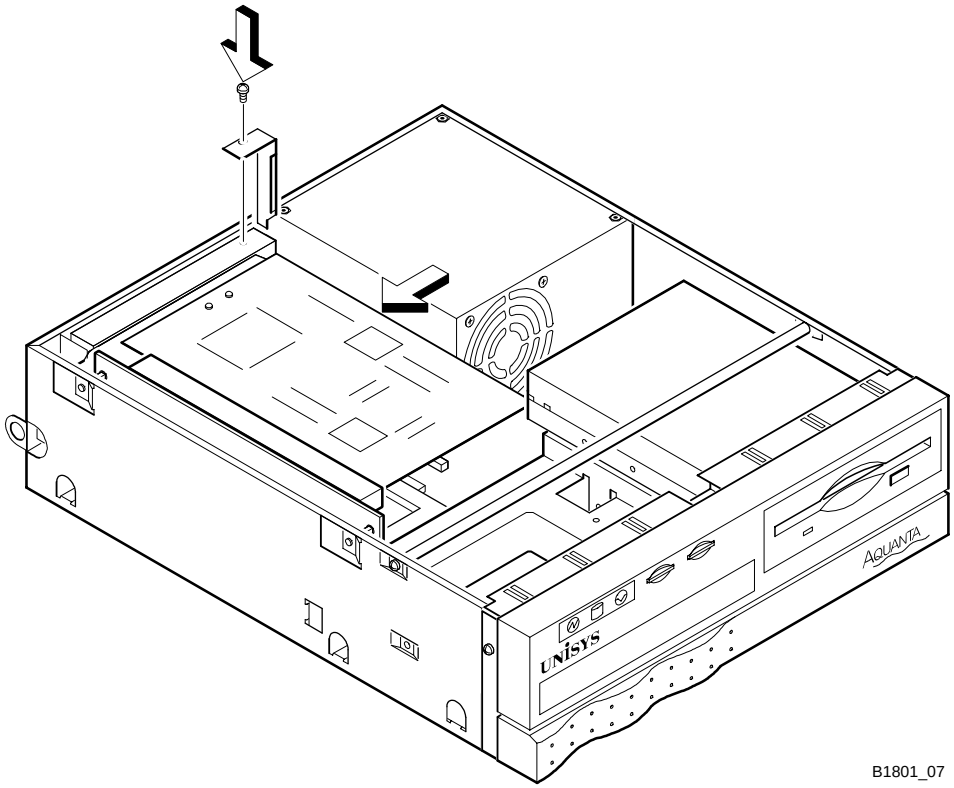

Adding Drives

Your system unit supports up to three drives: a 3.5-inch, 1.44MB (3-mode) floppy drive; a 3.5-inch, one-third height, internal hard drive; and a "slim" CD-ROM drive with a 56-pin ATAPI cable.

Installing a CD-ROM Drive

1. Turn the system off. Disconnect the power cord and all peripherals.
2. Remove the system unit cover, as described earlier in this section.

Caution

Protect your system from ESD, as described in "Avoiding Electrostatic Discharge," earlier in this section.

3. Remove the plastic drive bay cover from the front panel, as needed.
4. Remove and discard the metal drive bay cover from the chassis, as needed, by bending it until the tabs flex and break free. This cover cannot be replaced.
5. Remove the front panel, as described earlier in this section.
6. Open the drive carton and remove the drive.
7. Insert the drive into the 5.25-inch drive bay, as shown in Figure 1–8.
8. Secure the drive with the three screws provided.
9. Connect the 56-pin ATAPI cable to the slim CD-ROM drive and the secondary IDE connector on the motherboard.
10. Replace the front panel, as described earlier in this section.

11. Replace the system unit cover, as described earlier in this section, then turn the system on.
12. Run the BIOS Setup utility, and verify the success of your installation. Refer to Section 2 for details.

Figure 1–8. Installing a CD-ROM Drive

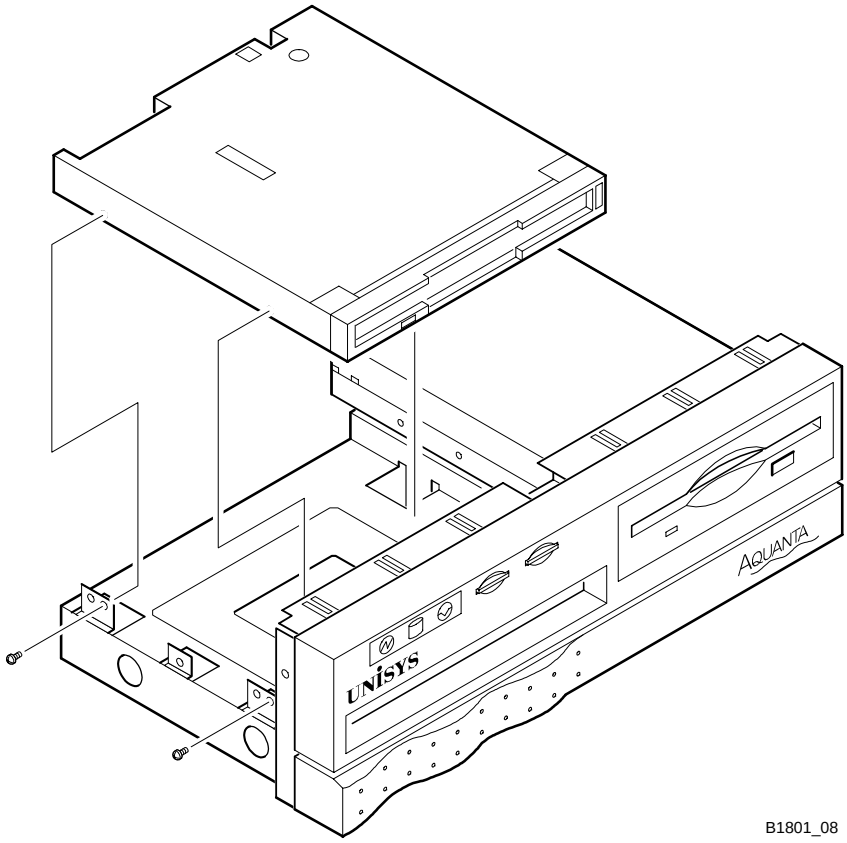

Upgrading Your 3.5-Inch Hard Drive

1. Turn the system off. Disconnect the power cord and all peripherals.
2. Remove the system unit cover, as described earlier in this section.
3. Remove the front panel, as described earlier in this section.
4. Remove the four screws that secure the old hard drive to the drive bracket, and slide the old hard drive out of the bracket.
5. Open the drive carton, and remove the new drive.
6. Insert the new drive into the drive bracket, and attach the drive to the bracket with four screws, as shown in Figure 1–9.
7. Replace the front panel, as described earlier in this section.
8. Replace the system unit cover, as described earlier in this section.
9. Reconnect the power cord and all peripherals, then turn the system on.
10. Run the BIOS Setup utility, and verify the success of your installation. Refer to Section 2 for details.

Figure 1–9. Installing a 3.5-Inch Hard Drive

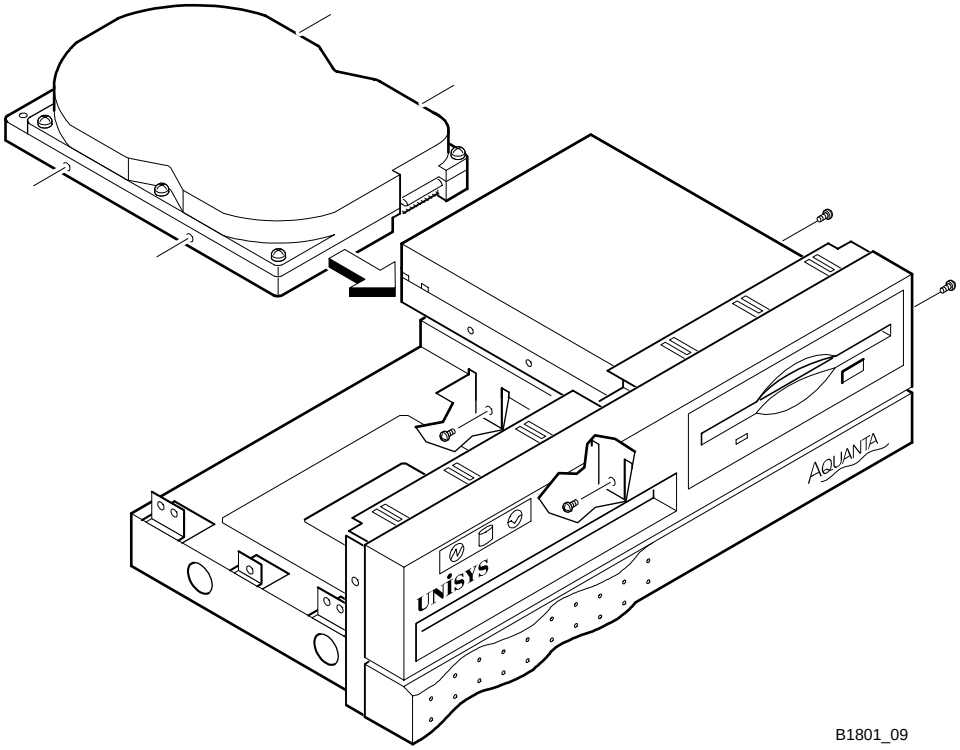

Connecting Peripherals to the System Unit

Connections for all of your workstation peripherals are located on the back panel of the system unit. See Figure 1–10 for details.

Figure 1–10. System Unit Back Panel

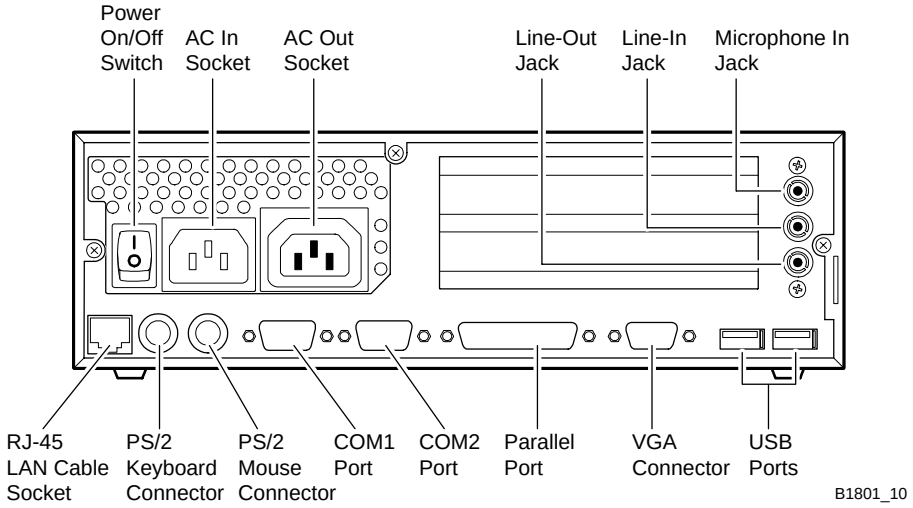

Where to Go From Here

After completing a hardware upgrade, it is necessary to run the BIOS Setup utility, as described in Section 2.

If you encounter any problems after upgrading the hardware and running the BIOS Setup utility, see Section 3 for information on troubleshooting.

Section 2
Configuring Your System

This section discusses the BIOS Setup utility, your preloaded software, and how to install additional software.

BIOS Setup Utility

The BIOS Setup utility is a menu-driven program. Use it to define system parameters and allocate system resources. It is stored in nonvolatile memory and is a permanent part of your system. The BIOS Setup utility parameters and resources relate exclusively to system board functions.

Prior to shipment, the factory uses the BIOS Setup utility to define your system parameters. If you want to assign a system password or reset the system time, you will need to use the BIOS Setup utility before operating your system.

If you upgrade your system hardware, you must run the BIOS Setup utility to define the changes you have made.

Starting the BIOS Setup Utility

To start the BIOS Setup utility:

1. Turn on your system.
2. When the UNISYS logo screen appears, press **F2**. The BIOS Setup main menu appears, as shown in Figure 2–1.

Figure 2–1. BIOS Setup – Main Menu

```
PhoenixBIOS Setup - Copyright 1985-95 Phoenix Technologies Ltd.
Main   Advanced   Security   Power   Boot   Exit

System Time:          [hh:mm:ss]                  Item Specific Help
System Date:          [mm/dd/yyyy]
                                                  <Tab>, <Shift-Tab>, or
Legacy Diskette A:    [1.44/1.25 Mb, 3 1/2"]      <Enter> selects fields.
Legacy Diskette B:    [Disabled]

Primary Master:       [Auto]
Secondary Master:     [Auto]

▶Memory Shadow
▶Memory Cache

System Memory:        640 KB
Extended Memory:      31744 KB

F1  Help   ↑ ↓ Select Item     - / +  Change Values      F9  Setup Defaults
ESC Exit   ← → Select Menu     Enter Select ▶  Sub-Menu  F10 Save and Exit
                                                         B1802_01
```

Changing the BIOS Settings

1. Press the right or left arrow key to highlight the name of the menu you want to activate. When you highlight a menu name, it's parameters appear on the screen.
2. Press the down or up arrow key to highlight the parameter you want to change.
3. Press the plus or minus key to change the value of the parameter.

Note: *A black triangle next to an entry on a screen indicates that a submenu is available to further define that parameter.*

4. Press **Enter** to select a submenu parameter.
5. Press **Esc** to return to the previous menu.

Note: *Item specific help appears on the right side of each BIOS screen. Navigational tips appear at the bottom of each BIOS screen.*

Exiting the BIOS Setup Utility

1. Highlight the Exit menu by pressing the right arrow key.
2. Highlight your preferred exit option by pressing the down arrow key.
3. Press **Enter**.

Preloaded Software

When you ordered your system, you specified which software programs would ship with your system and whether they would be preloaded onto the hard disk drive.

When you first turn on your system, it will attempt to launch the preloaded software you specified when you placed your order. If the system does not indicate that it has loaded the software, verify that you completed all hardware installation procedures correctly and that all connections are firmly in place. If that doesn't solve the problem, reinstall the operating system software, following the procedures described in the documentation that came with your operating system. If the system still does not work, follow the troubleshooting instructions in Section 3.

Installing Additional Software

Installing Application Software

Application software includes commercial, off-the-shelf software packages that perform a variety of functions.

To load additional application software, follow the instructions that came with that software. These packages usually include an automated device driver installation program.

Installing Hardware Device Drivers

When you upgrade your hardware, you typically need to install hardware device drivers that will enable your operating system to recognized that hardware.

Device drivers usually come with the hardware. If not, you can often download the most current versions of device drivers from each hardware manufacturer's Web page.

Where to Go From Here

After running the BIOS Setup utility or installing addition applications or device drivers, restart your computer, and verify that the changes you made were successfully implemented. If you encountered any problems configuring your system, see Section 3.

Section 3
Troubleshooting

This section discusses problems you may experience during hardware installation, and possible solutions. If your system experiences a failure not described in this section, you may need to place a service call.

This section reviews the following subjects:

- What to do when a BIOS password is forgotten
- Typical startup sequence
- Solving workstation problems
  - Preliminary checks
  - Troubleshooting an installation problem
  - Common failures
  - Components you can replace
- POST Beep Codes
- POST Messages

What to Do When a BIOS Password is Forgotten

If a BIOS password is forgotten, authorized personnel may use the following procedure to clear the current password from the BIOS.

1. Turn off the system power.
2. Remove the system unit cover, as described in Section 1 in “Removing and Replacing the System Unit Cover.”
3. Locate Jumper CPS1. For jumper locations, refer to the configuration label on the bottom of the motherboard.
4. Remove the jumper cap from pins 1-2.
5. Turn on the system.
6. After the BIOS is finished running, shut down the system.
7. Put the jumper cap back on pins 1-2 of jumper CPS1.
8. Replace the system unit cover, as described in Section 1 in “Removing and Replacing the System Unit Cover.”
9. Turn on the system.

You will now be able to open the BIOS setup utility and set a new password.

Typical Startup Sequence

When you turn on your system, it executes a predefined set of activities related to hardware initialization, confidence testing, and so forth. This set of activities is known as a startup sequence. Your system must complete each action in the sequence before you can consider it operational. Here is an overview of the startup sequence.

1. Your system receives power, and lights the Power LED on the front of the system unit. The power supply fan begins to rotate.

2. The system begins the Power On Self Test (POST). This test verifies that the system memory, system board, video controller, floppy disk drive, hard disk drive, drive controllers, and peripheral devices are all operational. The system emits one short beep to indicate that it has passed the POST.

   Note: *If the POST detects an error, it displays an error message on the monitor. Also, it may emit a corresponding beep code, an error message consisting of speaker tones arranged in distinctive patterns. For information on what to do for POST errors, see "Solving Workstation Problems," later in this section.*

3. As the POST executes, it displays system settings and values (such as processor type and speed, memory size, and so forth). Verify that these values match your actual system configuration.

   a) If you need more time to read the screen, press the **PAUSE** key.

   b) To resume the test, press any key.

4. The keyboard LEDs blink on and off, and the Floppy Disk LED lights briefly.

5. The Hard Disk LED on the front of the system unit lights.

6. If you have a properly configured hard disk drive with a boot partition that contains operating system software, the operating system load messages appear on the monitor.

   Note: *If the operating system is not yet installed or the system configuration in CMOS memory is not correct, the system does not issue load messages.*

When a system experiences problems during startup, it either halts the sequence or generates an error message to indicate that a failure has occurred. The following paragraphs discuss some of the actions you can take to resolve an installation problem.

Solving Workstation Problems

Your system is designed for simple, trouble-free installation and maintenance. As a rule, your first attempt to power up your equipment will be successful. However, new systems sometimes have easily remedied problems.

As mentioned, your system follows a specific routine each time you turn it on. Variations from this routine indicate that your equipment may have a failure. If your system does not power up normally, do not be alarmed; fixing the problem can be as simple as reseating a loose cable.

When you think about a problem, keep in mind that your best tools are common sense and deductive reasoning. The following paragraphs guide you through basic installation troubleshooting.

Preliminary Checks

If your system does not power up correctly after you have installed it, you may have any of several minor problems. Problems that occur the first time you turn on your system are usually the result of installation errors or an incorrect CMOS hardware configuration. Occasionally, the problem is the result of an actual hardware failure.

If your system fails when you first start it, review the installation and configuration process and reread applicable sections of this guide or other pertinent documentation. Try to answer the following questions:

- Is there a floppy disk in drive A?
- Are all power cables connected correctly and all power switches turned on?
- Are all interface cable connections secure and correct?
- Are all jumper and switch settings on the system board and peripheral devices correct? For information on the system board jumpers, see the configuration label on the bottom of the motherboard.
- Are all feature boards and drives installed correctly?

- Is the CPU securely connected to the motherboard?
- Are the values listed in the BIOS Setup utility correct? For more on the BIOS Setup utility, see Section 2.
- If you have a problem booting your operating system, see the manuals that came with your software package for installation instructions.

If all these items are correct, or if you experience a problem that makes it impossible to answer these questions, read the following paragraphs on troubleshooting.

Troubleshooting an Installation Problem

If you have an installation failure that cannot be solved by the measures just discussed, you need to study the problem more closely. Your goal should be to systematically eliminate each possible cause of the problem until you have determined which component is causing the failure. You may find the following approach helpful.

1. If you have not already done so, turn off the system unit and the monitor.
2. If you have not already done so, disconnect any serial or parallel devices (printers, modems, and so forth) from the system unit.
3. Make sure the monitor and keyboard are correctly connected to the system unit.
4. Make sure that the system unit is connected to a properly grounded power outlet.
5. Turn on the monitor and make sure the brightness and contrast controls are turned up at least two-thirds of the way.
6. Turn on the system unit.

7. Observe the system's startup sequence. Your system should complete each of the steps described in "Typical Startup Sequence," earlier in this section. If the system does not complete a step, the component activated during that step may be faulty. For example, if the Floppy Disk LED does not light, you may have a bad floppy disk drive. For more on how to resolve problems of this sort, see "Common Problems," later in this section. When you have fixed the problem, return to step 1.
8. If the system issues any error messages during the startup sequence, take the appropriate corrective action. For suggestions, see "Common Problems," later in this section. When you have fixed the problem, return to step 1.

   Note: *If the system only issues a beep code, or the message does not tell you enough to isolate the problem, contact your Unisys Customer Service Engineer.*

9. If you isolate the problem to a specific device, repair or replace the device in question. When you have fixed the problem, return to step 1.
10. If you plan to store your operating system on a hard disk drive, partition and format the hard disk drive appropriately. For instructions, see the operating system manuals. Load the operating system from the drive.
11. Select each hard disk drive partition in turn to verify that all partitions can be accessed. If you cannot access the drive, the drive may be incorrectly partitioned or configured. For more information, see your operating system documentation and Section 2 of this guide.
12. If you were experiencing problems with a particular program, try running that program. If the problem recurs, see the software documentation for instructions on setting up program parameters. You can also try disabling cache memory and BIOS shadowing.

When your system passes all of the steps just described, you can consider the troubleshooting process complete. Be sure to turn off your system and reconnect any devices that you disconnected during your troubleshooting effort.

Common Problems

For ideas on how to solve problems that can occur during installation and operation, see Table 3–1. This table provides a list of common problems accompanied by several solutions. Try each solution in the order presented in the table. Each time you implement one of these solutions, test it using the procedure described in "Troubleshooting an Installation Problem," earlier in this section. If you still cannot correct the problem, contact your Unisys Customer Service Engineer for help.

Note: *Faulty devices can cause problems that are difficult to isolate. An effective approach is to replace each suspected device with a known good device, one at a time, and retest the system. If the problem disappears after you replace a device, you have isolated the problem. To find out which devices you can replace, see "Components You Can Replace," later in this section. If the problem persists, contact your Unisys Customer Service Engineer.*

Table 3–1. Troubleshooting Guide

Problem	Solution
Nothing happens when I turn on the power.	Make sure the power outlet is live. Make sure both ends of the system unit power cable are plugged in and securely connected. Make sure both ends of all other system related power cords are plugged in and securely connected.
My system periodically powers off by itself.	Make sure the power outlet is live. Make sure both ends of the system unit power cable are plugged in and securely connected. Make sure both ends of all other system related power cords are plugged in and securely connected. Check the monitor interface cable and make sure both ends are properly connected.

Continued

Table 3–1. Troubleshooting Guide (cont.)

Problem	Solution
The fan at the back of my system does not rotate.	Make sure the power outlet is live. Make sure both ends of the system unit power cable are plugged in and securely connected. Make sure the power on/off cable is properly connected to CN1. With the power off, remove all feature boards and disconnect all internal drives. Turn on the system. If the problem does not recur, one of the devices you removed was the cause of the problem. Replace each device one at a time, testing the system after each device is reconnected. When the problem recurs, you have found the failing device.
My system unit's Power LED does not light.	Check the system unit fan. If the fan is rotating and the system is running normally otherwise, the Power LED may be defective. Contact your Unisys Customer Service Engineer for help. If the system is not running normally, make sure the power outlet is live. Make sure both ends of the system unit power cable are plugged in and securely connected. Make sure the power on/off cable is properly connected to CN1. With the power off, remove all feature boards and disconnect all internal drives. Turn on the system. If the problem does not recur, one of the devices you removed was the cause of the problem. Replace each device one at a time, testing the system after each device is reconnected. When the problem recurs, you have found the failed device.
The monitor screen is dark when I turn on the power.	Make sure the monitor power cable is plugged into a power source (system unit or wall socket). Check the monitor interface cable and make sure both ends are properly connected. Try turning the monitor brightness and contrast controls to their maximum settings. Make sure the SAZ socket is fully closed and the CPU is properly seated

Continued

Table 3–1. Troubleshooting Guide (cont.)

Problem	Solution
The characters on my monitor screen are distorted.	Check the monitor interface cable to make sure neither end has been accidentally pulled free. Make sure the monitor interface cable is not damaged. Use the monitor screen controls to adjust the screen values. Verify that the video driver and driver type are correct.
The images on my monitor screen flicker or waver.	Check the monitor interface cable to make sure neither end has been accidentally pulled free. Make sure the monitor interface cable is not damaged. Use the monitor screen controls to adjust the screen settings. Make sure that nearby fluorescent lights or other monitors are not causing interference. Verify that the video driver and driver type are correct.
The entire screen is not displayed.	Use the monitor screen controls to adjust the screen settings.
When I type on the keyboard, the characters that appear on the monitor are incorrect.	Make sure that no debris has fallen between the keys. Try turning the keyboard upside down and shaking it to dislodge any conductive material that may be shorting the keyboard contacts. Test the keyboard to find out whether any key is sticking. If so, someone may have spilled liquid on your keyboard, and you will have to replace the keyboard.
When I type on the keyboard, nothing appears on the monitor screen.	Check the monitor and keyboard interface cables to make sure neither cable has been accidentally pulled free. Make sure the keyboard interface cable is connected to the correct system unit receptacle. The keyboard cable fits in the mouse receptacle, but does not function properly if you plugged it into the mouse port by mistake. Verify that the language setting is correct.

Continued

Table 3–1. Troubleshooting Guide (cont.)

Problem	Solution
When I move my mouse, the cursor does not move.	Make sure that the mouse interface cable is securely connected to the correct system unit receptacle. The mouse cable fits in the keyboard receptacle, but does not function properly if you plugged it into the keyboard port by mistake. Verify that the correct mouse drivers or software have been installed.
When I move my mouse, the cursor moves erratically.	Turn the mouse over, remove the plastic cover and the rubber ball, then clean the rubber ball and the metal contacts inside the mouse. Put the mouse back together and test it.
My system does not issue a beep code when I turn it on.	Check the system unit fan. If the fan is rotating and the system is running normally otherwise, the speaker may be defective. Contact your Unisys Customer Service Engineer for help. With the power off, remove all feature boards and disconnect all internal drives. Turn on the system. If the problem does not recur, one of the devices you removed was the cause of the problem. Replace each device one at a time, testing the system after each device is reconnected. When the problem recurs, you have found the failed device.
The Floppy Disk LED does not light.	Make sure the floppy disk drive interface cable and power cable are properly connected. Verify that all system board jumpers related to the floppy disk drive are correctly set.
The Hard Disk LED on the front of the system unit does not light.	Make sure the cable from the LED to the system board is properly seated in the system board socket. Make sure the hard disk drive interface cable and power cable are properly connected. Verify that the correct hard drive configuration is stored in CMOS memory. You can check your configuration by running the BIOS Setup utility, as described in Section 2.
The Hard Disk LED on the front of the system unit is always lit or it lights and then turns off immediately.	Turn on the system unit, and determine whether you can hear the hard disk spinning. Refer to hard disk installation/troubleshooting instructions.

Continued

Table 3–1. Troubleshooting Guide (cont.)

Problem	Solution
My workstation cannot see the network.	Make sure all network cables are properly connected and the NIC jumper settings are correct. Verify that the proper driver(s) is installed.
My operating system does not load from the hard disk.	Make sure all power cables and drive cables are properly connected, and that all system and drive jumpers are correctly set. Boot DOS or Windows 95 from a floppy disk and run **fdisk**. Verify that the hard disk partition is intact. If you are running Windows NT, boot from the three floppy startup disks, and select **Repair** when prompted. You will need the NT system files, either on floppy or CD, to make the repair.
The application software I just installed does not run properly.	Make sure your software and system are correctly configured. For information on software configuration, see the manuals that came with your application. Make sure you are using an authorized copy of the application software. Make sure that your system unit has enough memory and disk space to run the program. Check the keyboard and system board jumper settings to make sure they are correct. Verify that the video driver and drive type are correct.

My system and software had been running correctly, but suddenly failed.	If the problem occurs when you run a program from a floppy disk, try a different copy of the program. If the problem is intermittent, check all cable connections and SIMMs. Also be sure there is no debris in the keyboard or mouse. Try to determine whether any other system component is experiencing random failures. If the problem occurs regularly, look for a noticeable pattern in the failure. For example, a problem that occurs exclusively with one file may be the result of data corruption in the file or a faulty disk. Try recreating the data file or using a new copy of the program in question. If you added or modified any hardware or software, remove the additions or changes one by one. If the problem disappears, it was probably the result of the last change you removed.

Components You Can Replace

Your system includes a number of components and devices that you can replace yourself. If you isolate a failure to one of these devices, you can order an identical device and substitute it for the failed component. When you replace a device yourself, you lower the service costs for your system by reducing the number of service calls you place. For procedures on replacing system components, see Section 1.

Here is a list of customer-replaceable components:

- Pentium processor chips
- System memory chips (SIMMs)
- Feature boards
- Hard disk, floppy disk, CD-ROM, and tape drives
- Monitor
- Keyboard
- Mouse
- Serial and parallel devices (printers, plotters, modems, and so forth)
- 3.0-volt lithium battery
- AC input power cables
- Drive interface cables

Some of the components in your system are *not* customer-replaceable. If you isolate a hardware failure to one of these components, call your Unisys Customer Support Center for assistance. Here is a list of components that are not customer-replaceable:

- Power supply
- Motherboard (system board)
- System unit LEDs and switches
- IDE cables

POST Beep Codes and Error Messages

When the system BIOS encounters an error that requires your attention, it will emit a beep code or display an error message.

POST Beep Codes

Beep Code 1 consists of a single long beep followed by three short beeps. It indicates that a video error has occurred and the BIOS cannot initialize the video screen to display any additional information.

When this happens, perform the following steps until you solve the problem:

1. Make sure the monitor is receiving power.
2. Make sure the monitor cable is properly connected.
3. Make sure the video card is properly seated in its slot.
4. Try another power cord.
5. Try another monitor.
6. Try another video card.
7. If that still doesn't solve the problem, call your Unisys Customer Service Engineer.

Beep Code 2 consists of a single long beep that repeats itself. It indicates that a DRAM error has occurred. When this happens, perform the following steps until you solve the problem:

1. Make sure each DRAM chip is properly seated in its slot.
2. Make sure the DRAM chips are properly configured. See Table A-3 for all possible configurations.
3. Swap out each DRAM chip until you identify the bad chip. Remember to configure the DRAM chips in accordance with Table A-3.
4. If that still doesn't solve the problem, call your Unisys Customer Service Engineer.

POST Messages

If the BIOS detects an error during the POST, one of the following messages will be displayed in a box in the middle of the screen, and the message PRESS F1 TO CONTINUE, DEL TO ENTER SETUP appears in the information box at the bottom.

Table 3–2. POST Messages

Error Message	Description
CMOS battery has failed	The CMOS battery is no longer functional. It should be replaced.
CMOS Checksum error	The Checksum of CMOS is incorrect. This can indicate that CMOS has become corrupt. This error may have been caused by a weak battery. Check the battery and replace as needed.
Display switch is set incorrectly	The display switch on the system board does not match the setting chosen during BIOS setup. Determine which setting is correct, then either turn off the system and change the jumper, or enter Standard CMOS Setup and change the VIDEO selection.
Floppy Disk(s) fail (80)	Unable to reset the floppy disk subsystem.
Floppy Disk(s) fail (40)	Floppy disk type mismatch.
Hard Disk(s) fail (80)	Hard disk drive reset failed.
Hard Disk(s) fail (40)	Hard disk drive controller diagnostics failed.
Hard Disk(s) fail (20)	Hard disk drive initialization error.
Hard Disk(s) fail (10)	Unable to recalibrate fixed disk.
Hard Disk(s) fail (08)	Hard disk drive sector failed.
Keyboard is locked out - Unlock the key	The BIOS detects that the keyboard is locked.
Keyboard error or no keyboard present	Cannot initialize the keyboard. Make sure that the keyboard is attached correctly and no keys are being pressed during the boot. If you are using a USB keyboard, go into the BIOS Setup, Advanced Menu, Integrated Peripherals, Keyboard and change the setting to disabled.
BIOS ROM checksum error - System halted	The checksum of ROM address F0000H-FFFFFH is bad.
Memory test failed	The BIOS onboard memory test detected an error.

Appendix A
System Specifications

Processor

Your system uses an Intel Pentium processor. The motherboard supports Pentium P54C 75, 90, 100, 120, 133, 150, 166, and 200 MHz processors and Pentium MMX 166 and 200 MHz processors. The processors are PGA and they plug into a 321-pin PGA ZIF socket. The motherboard supports a 3.3V/2.8V power plane for the CPU, and a CPU host bus speed of 50, 60, or 66 MHz, which is selected via jumpers.

PC AT Compatible Bus

The system has an IBM PC/AT Model 339 compatible ISA bus operating at 8MHz. One ISA expansion slot is on the motherboard. It is shared.

PCI Local Bus

The system has a PCI Local bus operating at up to 33MHz. A total of two PCI expansion slots are on the motherboard. One is shared.

System Board Memory

- All memory resides on the system board using industry standard 72-pin SIMM technology.
- SIMMs are 60ns, with tin-lead connectors. You can use either EDO SIMMs or Fast Page SIMMs with parity and ECC mode enabled.
- Two SIMM sockets are provided for base memory.
- The system board is upgradeable to 128MB DRAM on the motherboard.
- SIMMs must be identical in make, type and speed.
- The BIOS automatically recognizes the new amount of memory and it is not necessary to run the BIOS Setup program. It recognizes the SIMM with or without parity. By default, the BIOS does not check for parity. However, the CMOS can be set to check for parity, if so desired.

Table A–1. Supported SIMM Modules

Non-Parity	Parity
4Mx32(16MB)	4Mx36(16MB)
8Mx32(32MB)	8Mx36(32MB)
16Mx32(64MB)	16Mx36(64MB)

Note: *If a 36-bit SIMM is installed, use the "ECC/Parity Config" setting in the CMOS to enable ECC/Parity support.*

Second Level Cache

The motherboard comes with 256KB of pipeline burst second level cache.

Level One Cache

The Pentium P54C processor has its own built-in level one cache in the form of 8KB data and 8KB code cache in the write-back mode. The Pentium P55 processor has its own built-in level one cache in the form of 16KB data and 16KB code cache in the write-back mode.

BIOS

Your system comes with a Phoenix BIOS, version 4.06, which is IBM compatible and supports Intel's Pentium processor. The BIOS is implemented on the motherboard through 2Mb of flash EPROM. You can upgrade the BIOS. Contact your Unisys Sales Representative for the availability of a newer BIOS version.

The BIOS includes the following functions:

- Two-Level Password Security
- Power Management Enhancements
- BIOS Setup and CMOS Configuration
- Plug and Play enhancements
- 3-Mode FDD support
- CD-ROM bootable
- Keyboard BIOS
- DMI 2.0 support

Two-Level Password Security

The Supervisor password controls access to the CMOS settings. The User password controls access to the workstation. If both passwords are set, you need the User password to access the workstation, and the Supervisor password to access the CMOS settings.

Power Management Enhancements

The Power Management feature enables you to maximize power savings, maximize performance while saving energy, select customized settings, or use your system with energy savings turned off.

BIOS Setup and CMOS Configuration

The BIOS Setup utility is used to configure your hardware. All settings are stored in 128 bytes of CMOS memory. CMOS memory can be cleared by removing the battery for 15 seconds.

Plug and Play Enhancement

The BIOS is fully plug and play compatible per Intel and Microsoft specification V1.1u. It supports Boot Device Configuration. However, at this time, the BIOS does not support Dynamic Events Configuration.

Boot Device Configuration:

- Configures the system board
- Configures Plug and Play cards
- Lists configuration information

3-Mode FDD Support

The BIOS supports 3-Mode Floppy drives.

CD-ROM Bootable

The BIOS supports booting from the CD-ROM. The CD-ROM must be selected as the initial boot device (see the Boot menu in the BIOS Setup), and the CD must contain a bootable operating system.

System Board Jumper Settings

The system board jumper settings are all listed on the *Aquanta CP Series Configuration Label (CWP 50021)*, which is attached to the bottom of the motherboard.

System I/O Addresses Map

Table A–2. System I/O Address Map

Address (hex)	Size	Description
0000 - 000F	16 bytes	DMA Controller 1
0020 - 0021	2 bytes	Interrupt Controller 1
0040 - 0043	4 bytes	Timer Counter 1
0060	1 byte	Keyboard Controller Data Port
0061	1 byte	Port B Control Register
0064	1 byte	Keyboard Controller Command/Status Port
0070, bit 7	1 bit	NMI Mask Bit
0070, bits 6-0	7 bits	CMOS RAM address Register
0071	1 byte	CMOS RAM Data Register
0080 - 008F	16 bytes	DMA Page Register
00A0 - 00A1	2 bytes	Interrupt Controller 2
00A8	1 byte	Reserved for M/B Config
00A9	1 byte	Reserved for M/B Config
00C0 - 00DE	31 bytes	DMA Controller 2

continued

Table A–2. System I/O Address Map (cont.)

Address (hex)	Size	Description
00F0	1 byte	Math Coprocessor clear busy latch
00F1	1 byte	Math Coprocessor reset
00F2-00FF	14 bytes	Math Coprocessor
0120-013F	32 bytes	REALTEK LAN Controller Register
0140-0147	8 bytes	Crystal Audio System Control Register
0170 - 0177	8 bytes	Secondary IDE Channel Port
01F0 - 01F7	8 bytes	Primary IDE Channel Port
0200 - 0207	8 bytes	Game Controller Port
0220 - 022F	16 bytes	Crystal Audio System CODEC
0274 - 0277	4 bytes	I/O Port for ISA PnP emulator
0278 - 027F	8 bytes	Parallel Port 2
02F8 - 02FF	8 bytes	Serial Port 2
0330 - 0331	2 bytes	Crystal Audio System MPU-401 Compatible
0376	1 byte	Secondary IDE Channel Command Port
0377	1 byte	Secondary IDE Channel Status Port
0378 - 037F	8 bytes	Parallel Port 1
0388 - 038B	4 bytes	Crystal Audio System CODEC
0398 - 0399	2 bytes	NS 338 I/O configuration port
03B0 - 03BB	12 bytes	Video and MDA register
03BC - 03BF	4 bytes	Parallel Port 3
03C0 - 03DF	32 bytes	CGA, EGA video register
03F0 - 03F5	5 bytes	Floppy Disk Control Register
03F6	1 byte	Primary IDE Channel Command Port
03F8 - 03FF	8 bytes	Serial Port 1

continued

Table A–2. System I/O Address Map (cont.)

Address (hex)	Size	Description
04D0	1 byte	INT 1 edge/level control
04D1	1 byte	INT 2 edge/level control
0534 - 0537	4 bytes	Crystal Audio System CODEC
LPT + 400	8 bytes	ECP Port
0CF8 - 0CFB	4 bytes	PCI Config Address Register
OCFC - 0CFF	4 bytes	PCI Config Data Register
FCF0 - FCF7	8 bytes	Primary IDE Register
FCF8 - FCFF	8 bytes	Secondary IDE Register

System Memory Map

Table A–3. System Memory Map

Address Range (hex)	Description
FFFF0000 - FFFFFFFF	System Shadow BIOS, Read Only (High-BIOS)
000100000 - FFFFFFFF	Rest of Extended Memory
000F0000 - 000FFFFF	System shadow BIOS, Read Only (Low-BIOS)
000E0000 - 000EFFFF	64KB of Extended System BIOS Area
000C8000 - 000DFFFF	Suggested for optional Adapter ROMs
000C0000 - 000C7FFF	32KB of VGA Shadow BIOS (If used), Read Only
000A0000 - 000BFFFF	128KB of Video Buffers Area
00000000 - 0009FFFF	640KB of Main Memory

Keyboard Interface

An IBM PS/2 compatible keyboard interface with a 6-pin, mini-DIN, female connector is provided on the back of the unit. The mini-DIN cable is connected to the motherboard. The interface supports the Unisys PS/2 style 101/102 keyboards and the AX and OADG Japanese Keyboard.

Table A–4. Keyboard Parameters

Pin	Signal	In/Output
1	KDATA	Bi-directional
2	NC	
3	ground	
4	+5V	
5	KCLK	Bi-directional
6	NC	

Mouse Interface

An IBM PS/2 compatible mouse interface with a 6-pin, mini-DIN, female connector is provided on the back of the unit. The mini-DIN cable is connected to the motherboard. The interface supports the Unisys PS/2 style mouse. It does not support Novell UPS.

Table A–5. Mouse Parameters

Pin	Signal	In/Output
1	MDATA	Bi-directional
2	NC	
3	ground	
4	+5V	
5	MCLK	Bi-directional
6	NC	

Parallel Port Interface

The SMC FDC37C935 Super I/O Controller supports the parallel port. One Centronics compatible parallel interface is provided with a 25-pin, D-type, female connector. Also, ECP (Enhanced Compatibility Port) and EPP multi-mode bi-directional parallel port functions are supported.

Table A–6. Parallel Port Parameters

Pin	Signal (SPP,ECP) Mode	Pin Direction	Signal EPP Mode	Pin Direction
1	STB#	Bi-directional	Write#	Bi-directional
2	LP_D0	Bi-directional	LP_D0	Bi-directional
3	LP_D1	Bi-directional	LP_D1	Bi-directional
4	LP-D2	Bi-directional	LP_D2	Bi-directional
5	LP_D3	Bi-directional	LP-D3	Bi-directional
6	LP_D4	Bi-directional	LP_D4	Bi-directional
7	LP_D5	Bi-directional	LP_D5	Bi-directional
8	LP_D6	Bi-directional	LP_D6	Bi-directional
9	LP_D7	Bi-directional	LP_D7	Bi-directional
10	ACK#	Input	ACK#	Input
11	BUSY	Input	BUSY	Input
12	PE	Input	PE	Input
13	SLCT	Input	SLCT	Input
14	AUTOFD#	Bi-directional	DSTRB#	Bi-directional
15	ERROR#	Input	ERROR#	Input
16	INIT#	Bi-directional	INIT#	Bi-directional
17	SLCTIN#	Bi-directional	ASTRB#	Bi-directional
18	GND			

continued

Table A–6. Parallel Port Parameters (cont.)

Pin	Signal (SPP,ECP) Mode	Pin Direction	Signal EPP Mode	Pin Direction
19	GND			
20	GND			
21	GND			
22	GND			
23	GND			
24	GND			
25	GND			

Serial Port Interfaces

The SMC FDC37C935 Super I/O Controller also supports the serial ports. Two serial port interfaces are provided, each with a 9-pin, D-type, male connector. These are NS161450/PC16550-Compatible UARTS with a send/receive FIFO buffer of 16 bytes. The serial port addresses and interrupts are configurable.

Table A–7. Serial Port Parameters

Pin	Signal	In/Output
1	DCD	Input
2	RXD	Input
3	TXD	Output
4	DTR	Output
5	ground	
6	DSR	Input
7	RTS	Output
8	CTS	Input
9	RI	Input

Sound Controller (Optional)

The Crystal CS4237B is a single chip multimedia audio system controller and codec that provides compatibility with ISA Plug and Play, the Microsoft Windows Sound System, and will run software written for the Sound Blaster and Sound Blaster Pro Interfaces. The CS4237B also contains an internal FM synthesizer, an MPU-401 UART, joystick logic, and Plug-and-Play external interfaces for a wavetable synthesizer, CD-ROM, and modem. In addition, the CS4237B includes hardware master volume control pins as well as extensive power management and 3D sound technology.

- 16-Bit Address Decode Support
- Compatible with Sound Blaster, Sound Blaster Pro, and Windows Sound System
- Integrated SRS 3D Sound Technology
- 6-Channel Input Mixer
- Fully Plug-and-Play ISA Compatible
- Industry Leading Delta-Sigma Data Converters
- Internal or External FM Synthesis Support
- Hardware Master Volume controller
- CS9236 Wavetable Digital Audio Interface
- MPU-401 MIDI Interface
- CS4236/CS4232/CS4231 Register Compatible
- Dual DMA Support w/FIFOs, Full Duplex Operation

The MIDI/game port has a 15-pin, D-type, female connector. The pin assignments for the MIDI/joystick port are shown in the following table.

Table A–8. MIDI/Game Port Parameters

Pin	Signal	In/Output
1	+5v	
2	BUTTON 0	Input
3	POSITION 0	Input
4	GND	
5	GND	
6	POSITION 1	Input
7	BUTTON 1	Input
8	+5v	
9	+5v	
10	BUTTON 2	Input
11	POSITION 2	Input
12	MIDI OUT	Output
13	POSITION 3	Input
14	BUTTON 3	Input
15	MIDI IN	Input

USB Interfaces

The Universal Serial Bus (USB) is expected to become the standard for low and medium speed peripheral connections. Its flexible architecture, 12 MBs speed with a 1.5 MBs sub-channel, and Plug and Play features, support 127 different physical devices, including the USB Keyboard, USB Mouse, USB Monitor, USB Digital Camera and USB CTI (Computer-Telephony Integration).

A dual channel USB connector is located on the back panel of the system that provides high speed, ease of use, and Plug and Play connectivity to a future generation of peripherals.

USB is not supported by Windows NT 4.0. Future versions of Windows NT are expected to support USB.

The pin assignments of the two USB ports are shown in the following table.

Table A–9. USB Interface Parameters

Pin	USB1 Signal	USB2 Signal
1	+5V	+5V
2	USBP0–	USBP1–
3	USBP0+	USBP1+
4	GND	GND

Power LED, Power Switch, Hard Disk Drive LED

One 6-pin header is provided on the motherboard for the front panel indicators. The pin definitions are shown in the following table.

Table A–10. Header CN21 Parameters

Pin	Description
1	Ground
2	Reset
3	Power LED
4	IDE device LED
5	LAN LED or Suspend Mode LED
6	Suspend Mode switch

Direct Memory Access

DMA allows data transfers between main memory and I/O devices such as a disk controller or communications device. The following DMA channels are supported:

Table A–11. DMA Parameters

DMA Channels	Data Width	System Resources
Channel 0	8 or 16 bits	Available
Channel 1	8 or 16 bits	Crystal Audio Card
Channel 2	8 or 16 bits	Floppy Controller
Channel 3	8 or 16 bits	Parallel Port for ECP function
Channel 4		Cascade Channel
Channel 5	16 bits	Available
Channel 6	16 bits	Available
Channel 7	16 bits	Available

Interrupts

Two interrupt controllers are provided by the Intel PIIX3 PCI chipset. Sixteen interrupts are provided as follows:

Table A–12. Interrupt Functions

IRQ No	Function
0	Interval Timer
1	Keyboard
2	Cascade Interrupt from PIC
3	Serial Port 2
4	Serial Port 1
5	Available
6	Floppy Drive
7	Parallel Port
8	Real Time Clock
9	Available
10	Available
11	Available
12	PS/2 Mouse
13	Numeric Processor
14	Primary IDE
15	Secondary IDE

Counter/Timer

There is a counter/timer in the Intel PIIX3 PCI chipset which contains three independent counters. All three counters are driven from a 14.318 MHz oscillator through a divide-by-12 counter. The output of Counter 0 is connected to the interrupt controller. It is intended to be used as a multi-level interrupt to the system. The following programmable counter/timers are supported:

Table A–13. Programmable Counter/Timers

Channel Number	Function
0	Supports system time
1	Supports refresh cycles
2	Supports the tone generation for the speaker

Time of Day Clock/CMOS RAM and Battery

The CMOS-RAM contents and Real Time are maintained by an external 3.0V lithium battery. All CMOS RAM is reserved for BIOS use. The Real Time Clock will keep time to an accuracy of + 1 minute per month or +/- 2 seconds per day.

Mass Storage

The system contains three drive bays, one supports a 3.5 inch 1.44MB floppy disk drive, one a 3.5-inch IDE hard drive ,and one the optional slim CD-ROM.

The power supply provides one standard 4 pin, one mini 4 pin, female power connector, and one customized power connector for the mass storage devices.

Floppy Disk Drives

A floppy cable supports one built-in 3.5" 3-Mode floppy disk drive. A 34 pin header is available on the motherboard for connecting the floppy drive.

Table A–14. Floppy Port Parameters

Pin	Description	In/Output
2	-RED_WR	Output
4	NC	
6	DRATEO	Output
8	-INDEX#	Input
10	-MOT_A	Output
12	-DRV_B	Output
14	-DRV_A	
16	-MOT_B	Output
18	-DIR	Output
20	-STEP	Output
22	-WR_DT	Output
24	-WR_EN	Output
26	-TRACK0	Input
28	-WR_PROT	Input
30	-RD_DATA	Input
32	-HEAD0	Output
34	-DISK_CHK	Input
All odd pins	GND	

IDE Hard Disk and CD-ROM Interface Configuration

The VT82C586A controller supports an IDE transfer rate of up to 22MB/second to cover PIO mode 4 and Multi-word DMA mode 2 drivers and beyond. There are two IDE headers on the board, one primary and one secondary. IDE 1 is the primary connector which support the 32-bit Local Bus IDE interface, and IDE 2 is the secondary connector which supports the CD-ROM drive. The IDE pin definitions are shown in the following table.

Table A–15. IDE Parameters

Pin	Descrption	In/Output
1	-BRESDRV	Output
2	GND	
3	DD7	Bi-directional
4	DD8	Bi-directional
5	DD6	Bi-directional
6	DD9	Bi-directional
7	DD5	Bi-directional
8	DD10	Bi-directional
9	DD4	Bi-directional
10	DD11	Bi-directional
11	DD3	Bi-directional
12	DD12	Bi-directional
13	DD2	Bi-directional
14	DD13	Bi-directional
15	DD1	Bi-directional
16	DD14	Bi-directional
17	DD0	Bi-directional
18	DD15	Bi-directional

continued

Table A–15. IDE Parameters (cont.)

Pin	Descrption	In/Output
19	GND	
20	NC	
21	DDRQ0	Output
22	GND	
23	-DIOW	Output
24	GND	
25	-DIOR	Output
26	GND	
27	IODRY	Input
28	PULL-UP	
29	-DDAK0	Input
30	GND	
31	HD_IRQ1*	Input
32	NC	
33	DA1	Output
34	NC	
35	DA0	Output
36	DA2	Output
37	-CS1P	Output
38	-CS3P	Output
39	LED	Input
40	GND	

Video Subsystem

The onboard S3 Trio64 + PCI Video Controller comes with two 32x32 EDO 1MB Video Memory chips installed. You can upgrade to two 32x32 EDO 2MB Video Memory chips.

Video Pin Assignments

The pin assignments for the for the VGA, 15 pin, micro D-type, female video connector are shown in the following table.

Table A–16. VGA Connector Parameters

Pin	Signal	In/Output
1	RED	Output
2	GREEN	Output
3	BLUE	Output
4	NC	
5	GND	
6	RED Return	
7	GREEN Return	
8	BLUE Return	
9	NC	
10	GND	
11	NC	
12	NC	
13	HSYNC	Output
14	VSYNC	Output
15	NC	

Power Supply Assembly

The power supply assembly provides 80 watts of DC power. The DC output is sufficient to power the system board, three internal mass storage devices, the optional sound module, and up to two PC-AT/PCI compatible expansion boards. Power is distributed from the power supply through one twelve-pin connector cable to the system board. Additionally, +5VDC and +12VDC power is supplied to mass storage devices through one standard 4 pin connector.

Table A–17. Power Supply Voltages

Voltage	Range	Current	Load	Max Ripple/
(Vdc)	(%)	Min. (A)	Max. (A)	Noise (mV p-p)
+5V	+5.25/+4.75	3.0	10.0	50
+12V	+12.6/+11.4	0.5	2.0	120
-12V	+13.2/-10.8	0.0	0.5	120
+5V	-4.5/-5.5	0.0	0.5	120

The voltage selection is automatic. You do not have to select the voltage because it is a universal power supply.

The power supply supports input Voltage ranging from 90VAC to 260VAC. The input frequency can range from 47Hz to 63Hz.

The power supply assembly includes a built-in fan to provide cooling for the system electronics as well as cooling for the power supply circuitry. The thermally controlled fan provides air flow through the power supply at up to 17CFM.

Table A–18. CN1 Power Supply Parameters

Pin	Description	In/Output
1	PG -(Power-good)	Input
2	+5V	Input
3	+12V	Input
4	-12V	Input
5	GND	
6	GND	
7	GND	
8	GND	
9	-5V	Input
10	+5V	Input
11	+5V	Input
12	+5v	Input

On/Off Switch

The power On/Off switch is located on the left side of the back panel.

Fan

System cooling is accomplished by one ball bearing fan that is located inside the power supply assembly. The fan has a capacity of 17CFM.

Reset Button

The reset button is located on the front panel. Press it to reboot the system without turning the power on or off.

Suspend Button

The suspend button is located on the front panel. Press it to enter the suspend mode. If the system is in the suspend mode, press it to restore the system to full power mode.

Speaker

The mother board contains a built-in mini-speaker.

Dimensions

The dimensions and weight of your system are shown in the following table.

Table A–19. Dimensions and Weights

Product				Packaged Product			
L	W	H	WT	L	W	H	WT
12.56 in	9.81 in	2.88 in	10 lb.	21 in	18.625 in	10.31 in	24 lb.

Printed Circuit Board

The printed circuit board has four layers.

Security Lock

This system has a security lock on the back panel.

Maximum Size for Add-On Cards

Your system supports ISA cards and PCI cards of the following dimensions:

ISA CARDS:

Length—190.5mm/7.5in.

Width—101.6mm/4.0in.

PCI CARDS:

Slot 1:

Length—144.8mm/5.7in. (w/CD-ROM)

Length—190.5mm/7.5in. (w/o CD-ROM)

Width—101.6mm/4.0in.

Slot 2:

Length—134.6mm/5.3in.

Width—85.1mm/3.35in.

Note: *BNC connectors on feature boards may cause installation problems*

Supported Operating Systems

MS-DOS 6.22

Microsoft MS-DOS version 6.22 is supported

Windows for Workgroups 3.11

Microsoft Windows for Workgroups 3.11 is supported.

OS/2

IBM OS/2 operating system, version 2.1 and Microsoft Presentation Manager services are supported. The system is certified by the OS/2 certification program.

SCO UNIX

SCO UNIX version 3.2.4.2, SCO Open Desktop 3.0.0, and SCO OpenServer Release 5.0 (IDE or SCSI CD-ROM required) are supported. The system is certified by the SCO UNIX certification program.

Netware 3.12 and 4.10

The system supports the latest version of Novell Netware. The system is certified by the Novell certification program.

Windows NT 3.51/ 4.0

The system supports the latest version of Windows NT 3.51 and 4.0. The system is certified by the Windows NT certification program.

Windows 95

The system supports the latest version of Windows 95. The system is certified by the Windows 95 certification program, and the PC 97 Hardware Certification program.

Unixware

The system supports the latest version of Unixware.

Operating Environment

The following are the conditions under which you can turn on and operate your system without damage to any of its components. Exceeding these parameters may cause damage to your system.

Table A–20. Operating Environment

Description	Range
Temperature	+55.4° F to +95° F (+13° C to +35° C)
Thermal change	18° F per hour (10° C per hour)
Relative humidity	10% to 80% noncondensing
Altitude	Sea level to 8,000 ft (2,438.4 m)
Maximum vibration	0.02 in. (0.05 cm) displacement from 5 to 16 Hz; 0.25 G from 16 to 300 Hz, with a sweep rate of 0.5 octaves per minute.
Shock	4 Gs amplitude with a 10 ms duration, half sine wave.

Non-Operating Environment

The following are the conditions under which your system will not sustain damage, as long as it is turned off. Exceeding these parameters may cause damage to your system.

Table A–21. Non-operating Environment

Description	Range
Temperature	-40° F to +149° F (-40° C to +65° C)
Thermal change	54° F per hour (30° C per hour)
Relative humidity	0% to 95% noncondensing
Altitude	Sea level to 14,000 ft (4,267.2 m)
Maximum vibration	0.1 in. (0.254 cm) displacement from 5 to 12 Hz; 0.75 G from 12 to 300 Hz with a sweep rate of 0.5 octaves per minute.
Shock	20 Gs amplitude with a 10 ms duration, half sine wave.

Shipping Specifications

The following are conditions under which your system will not sustain damage, as long as it is properly packaged for shipping. These shipping specifications assume that you repack your equipment in its original container and use the original shipping material. Exceeding these parameters may cause damage to your system.

Table A–22. Shipping Specification

Description	Range
Temperature	-40° F to +149° F (-40° C to +65° C)
Thermal change	108° F per hour (60° C per hour)
Relative humidity	0% to 95%
Altitude	Sea level to 14,000 ft (4,267.2 m)
Maximum vibration	0.5 Gs input with a sweep rate of 5 to 200 Hz; 0.5 Gs dwell for 15 minutes at the four maximum resonant frequencies in three axes.

Table A–23. Shock Parameters

Shipping Weight	Maximum Drop
20 lb (9.1 kg) or less	36 in (91.4 cm)
40 lb (18.1 kg) or less	30 in (72.2 cm)
60 lb (27.2 kg) or less	24 in (61 cm)

Index

3

3.5-inch internal-access drive
  installing, 1-21

A

ac power connector, 1-23
adding drives, 1-19
audience, xi

B

BIOS
  main screen, 2-2
  System Configuration screen, 1-11
BIOS Setup utility
  how to start, 2-2, 2-3
  running the BIOS Setup utility, 2-1
BIOS shadowing, 3-6

C

cables
  connecting peripherals
    keyboard, 1-23
    monitor, 1-23
    mouse, 1-23
    parallel port equipment, 1-23
    serial port equipment, 1-23
  connecting to ac power, 1-23
cache memory
  installation, 1-16
  upgrade, 1-16
CMOS configuration, 3-4
component
  screws, 1-2
connecting cables, 1-23
connectors
  protecting, 1-2
conventions
  used in the manual, xii
cover
  removing, 1-4
  replacing, 1-4
CPU
  installation, 1-10
customer-replaceable components, 3-12

E

electrostatic discharge, 1-3
  precautions, 1-17
error messages
  troubleshooting, 3-7
ESD, 1-3
expansion slots, 1-16

F

feature boards
  configuration rules, 1-16
  upgrade, 1-16

I

installation
cache memory, 1-16
CPU, 1-10
feature boards, 1-16
processor, 1-7
SIMMs, 1-12, 1-14
system memory, 1-12
troubleshooting, 3-5
video memory, 1-15
ISA boards, 1-16

J

jumpers
configuration label, 1-10

K

keyboard connector, 1-23

M

manual
general information, xi
organization, xi
memory
cache installation, 1-16
DRAM installation, 1-12
video installation, 1-15
modular
system, 1-2
monitor connector, 1-23
mouse connector, 1-23

P

parallel port connector, 1-23
password
troubleshooting, 3-2
PCI boards, 1-16
POST, 3-3
beep codes, 3-13
messages, 3-14
Power LED, 3-8
Power On Self Test
messages, 3-14
preliminary notes, 1-2
preloaded software, 2-3, 2-4
processor
installation, 1-7
upgrade, 1-7

R

removing
SIMMs, 1-13
system unit cover, 1-4
replacing
system unit cover, 1-4
running the BIOS Setup utility, 2-1

S

second level cache
installation, 1-16
serial port connector, 1-23
shipping specifications, A-27
SIMMs
configuration rules, 1-12
installation, 1-12
installing, 1-14
removing, 1-13
startup sequence, 3-2
supplemental-drive bracket, 1-17
system
upgrades, 1-1
system memory
installation, 1-12
system memory upgrade, 1-12
system unit cover
removing, 1-4
replacing, 1-4

T

troubleshooting
- applications, 3-11
- boot problems, 3-10
- cluster problems, 3-11
- common problems, 3-7
- disk drive problems, 3-10, 3-11
- general discussion, 3-4
- installation problems, 3-5
- keyboard problems, 3-9
- monitor problems, 3-8
- mouse problems, 3-10
- operating system problems, 3-11
- power problems, 3-7

U

upgrading
- cache memory, 1-16
- DRAM, 1-12
- processor, 1-7
- video memory, 1-15

upgrading your system, 1-1

V

video memory
- installation, 1-15
- upgrade, 1-15