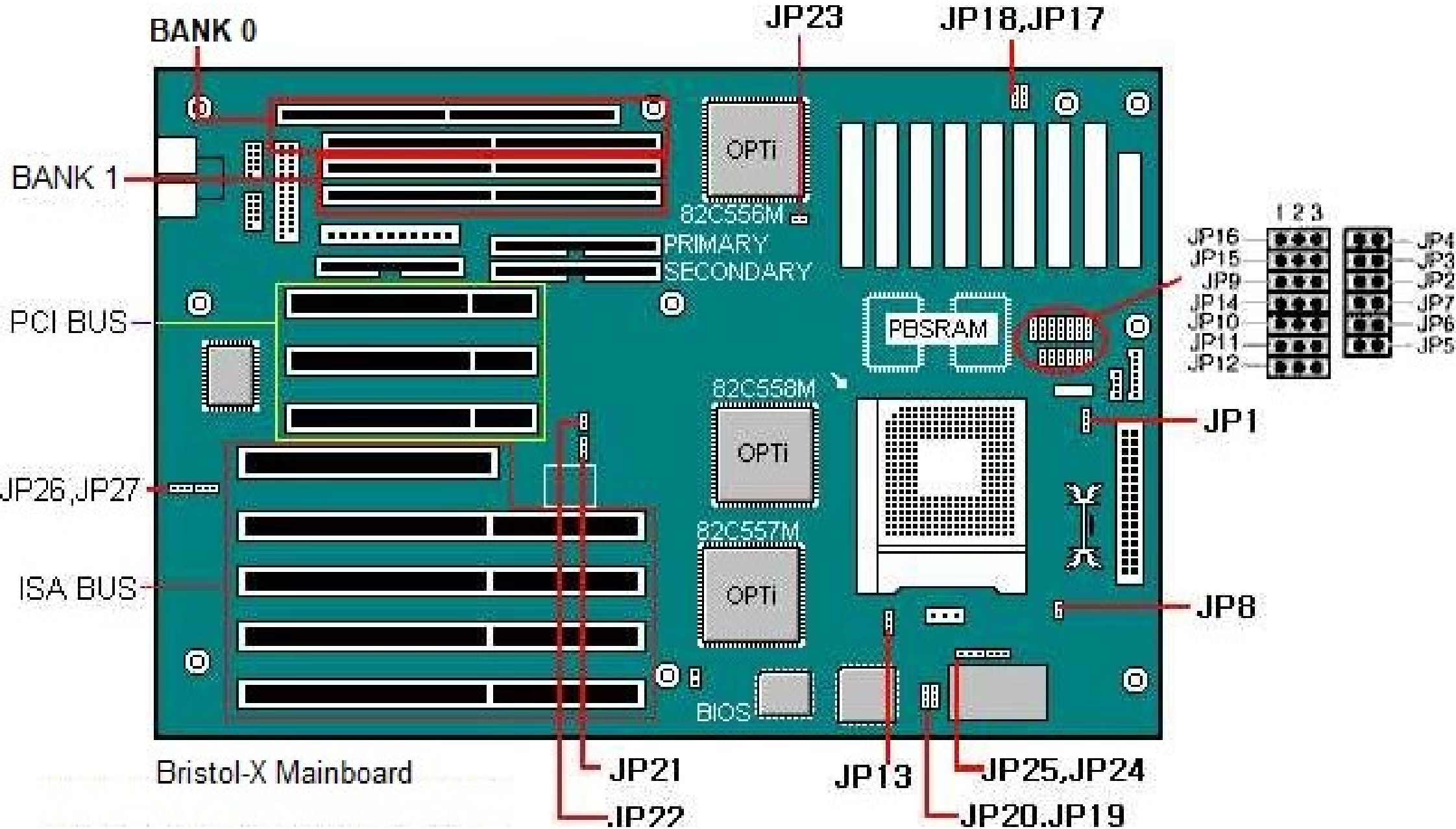

Bristol-X Mainboard

CPU Settings

jumper setting		Function
JP21,22	1-2, 1-2	System Clock: 50MHz (P54C/75MHz)
	2-3, 1-2	System Clock: 60MHz (P54C(S)/90,120MHz)
	2-3, 2-3	System Clock: 66.6MHz (P54C(S)/100, 133MHz)
JP 9,14	1-2, 1-2	System Clock: 50,60,66.6MHz (P54C/75,90,100MHz)
	2-3, 1-2	System Clock: 60,66.6MHz (P54C(S) 120/133MHz)
JP 2-8	CLOSE	not used
JP 19,20	DRAM selection	1-2 : Normal, 2-3 : EDO
JP 24	1-2	Do not initialize CMOS RAM
	2-3	Clear CMOS RAM
JP 25	1-2	Use the PASSWORD function
	2-3	Disable PASSWORD function

ECP/EPP DMA Channel selection

jumper	DREQ1 & DACK#1	DREQ3 & DACK#3
JP 26	1-2	2-3 (fixed, cannot change)
JP 27	1-2	2-3 (fixed, cannot change)

이전화면

Memory support for BRISTOL-X boards

cache memory	Expansion: up to 1MB Type: 28-pin or 32-pin DIP type (treated as a socket) Speed: 15ns
main memory	Type: 72-pin SIMM module, 70ns Socket: Provides 4 72-pin SIMM type module sockets Capacity: 1MB, 2MB,4MB,8MB, 16MB, 32MB available Expansion: up to 128MB Type : Single Side DRAM : 1MB, 4MB, 16MB Double Side DRAM: 2MB, 8MB, 32MB

memory size	bank 0		bank 1	
	SIMM1	SIMM2	SIMM3	SIMM4
8M	2M	2M	2M	2M
	4M	4M	--	--
10M	1M	1M	4M	4M
12M	2M	2M	4M	4M
16M	4M	4M	4M	4M
	8M	8M	--	--
18M	1M	1M	8M	8M
20M	2M	2M	8M	8M
24M	4M	4M	8M	8M
32M	8M	8M	8M	8M
	16M	16M	--	--
34M	1M	1M	16M	16M
36M	2M	2M	16M	16M
40M	4M	4M	16M	16M
48M	8M	8M	16M	16M
64M	16M	16M	16M	16M
	32M	32M	--	--
66M	1M	1M	32M	32M
68M	2M	2M	32M	32M
72M	4M	4M	32M	32M
80M	8M	8M	32M	32M
96M	16M	16M	32M	32M
128M	32M	32M	32M	32M

BRISTOL-X/X+/Y Main B/D CMOS SETUP

Press DEL KEY at bootup

Setup

Standard

Date/Time	Date and time setting
Floppy A	Not / 360K 5.¼/ 1.2M 5.¼ /720KB ½ / 1.44M ½ / 2.88M ½
Floppy B	
Master Disk	Not / 1-45 / User / ESDI / SCSI
Slave Disk	

Advanced

Starting Dream System Logo	On	On, Off
Quick Boot	On	On, Off
Typematic Rate (chars/Sec)	30	Disabled, 15, 20, 30
System Keyboard	Present	Absent, Present
Primary Display	VGA/EGA	Absent, VGA/EGA, CGA
PS/2 Mouse Support	Enable	Disabled, Enabled
System Boot Up Num Lock	On	On, Off
OS/2 Compatible Mode	Disabled	Disabled, Enabled
Floppy Drive Swapping	Disabled	Disabled, Enabled
System Boot Up Sequence	A:, C:	A:, C: C:, A:
External Cache	Enable	Disabled, Enabled
Internal Cache	Enable	Disabled, Enabled
Password Checking	Always	Setup, Always
Video Shadow C000, 32K	Disabled	Disabled, Enabled
Shadow(C800,CC00,D000, ...	Disabled	Disabled, Enabled
IDE Multi-Block Transfer Mode	Disabled	Disabled, 2S/B, 4S/B....
Pri. IDE 32Bit Mode	Enabled	Disabled, Enabled
Pri. IDE Master HDD LBA Mode	Enabled	Disabled, Enabled
Pri. IDE Slave HDD LBA Mode	Disabled	Disabled, Enabled
Number of HDD/CD In 2nd Cont.	None	None, 1HDD, 2HDD
Sec. IDE 32Bit Mode	Disabled	Disabled, Enabled
Sec. IDE Master HDD LBA Mode	Disabled	Disabled, Enabled
Sec. IDE Slave HDD LBA Mode	Disabled	Disabled, Enabled

Chipset

Boot to PnP Operating System	No	No, yes
PCI VGA Palette Snoop	Disabled	Disabled, Enabled
IRQ 9 used by ISA	Yes	No, yes
IRQ 10 used by ISA	Yes	No, yes
IRQ 11 used by ISA	No	No, yes

Power Ctrl

Wake-up Scheduler	Enabled	Disabled, Enabled
Wake-up Modem Ring	Enabled	Disabled, Enabled
Power Management (Timeout)	Enabled	Disabled, Enabled
IDE Drive Power Down	Disabled	Disabled, Enabled
VESA Video Power Down	Off	Disabled, Standby, Suspend, Off
Monitor VGA Activity	Disabled	Disabled, Enabled
Monitor IDE HDD, CD Activity	Disabled	Disabled, Enabled
Timeout Value	60 Min.	5, 10, 15, 30, 40, 45, ..75Min

Peripheral

Programming Mode	Auto	Auto, Manual

Parallel Port	378H	Disabled, 3BCH, 378H, 278H
OnBoard PCI IDE Controller	Enabled	Disabled, Enabled
Parallel Port Mode	Normal	Bi-Dir, EPP, ECP
Parallel Port DMA Channel	One	1, 3

Utility

DetectMaster	Automatically detects the capacity of the hard disk drive connected to the Primary IDE connector (hard disks connected to the Secondary IDE connector are automatically recognized without setting)	
DetectSlave	Automatically detects the capacity of the hard disk drive connected to the Primary IDE connector (hard disks connected to the Secondary IDE connector are automatically recognized without setting)	
Color Set	Sky, Army, Pastel, LCD	Setup screen color selection

Security

Password	Up to 6 alphanumeric characters can be entered
Anti-Virus	Virus protection function, write protection function to the boot sector of the hard drive

Default

Original	Corrected to the stage before the setup change
Optimal	Automatic setting function to optimal environment (Standard, Utility, Password are not changed)