GIGA-BYTE TECHNOLOGY CO., LTD.

GA-6LM7A (VER. 1.0)

Configuration

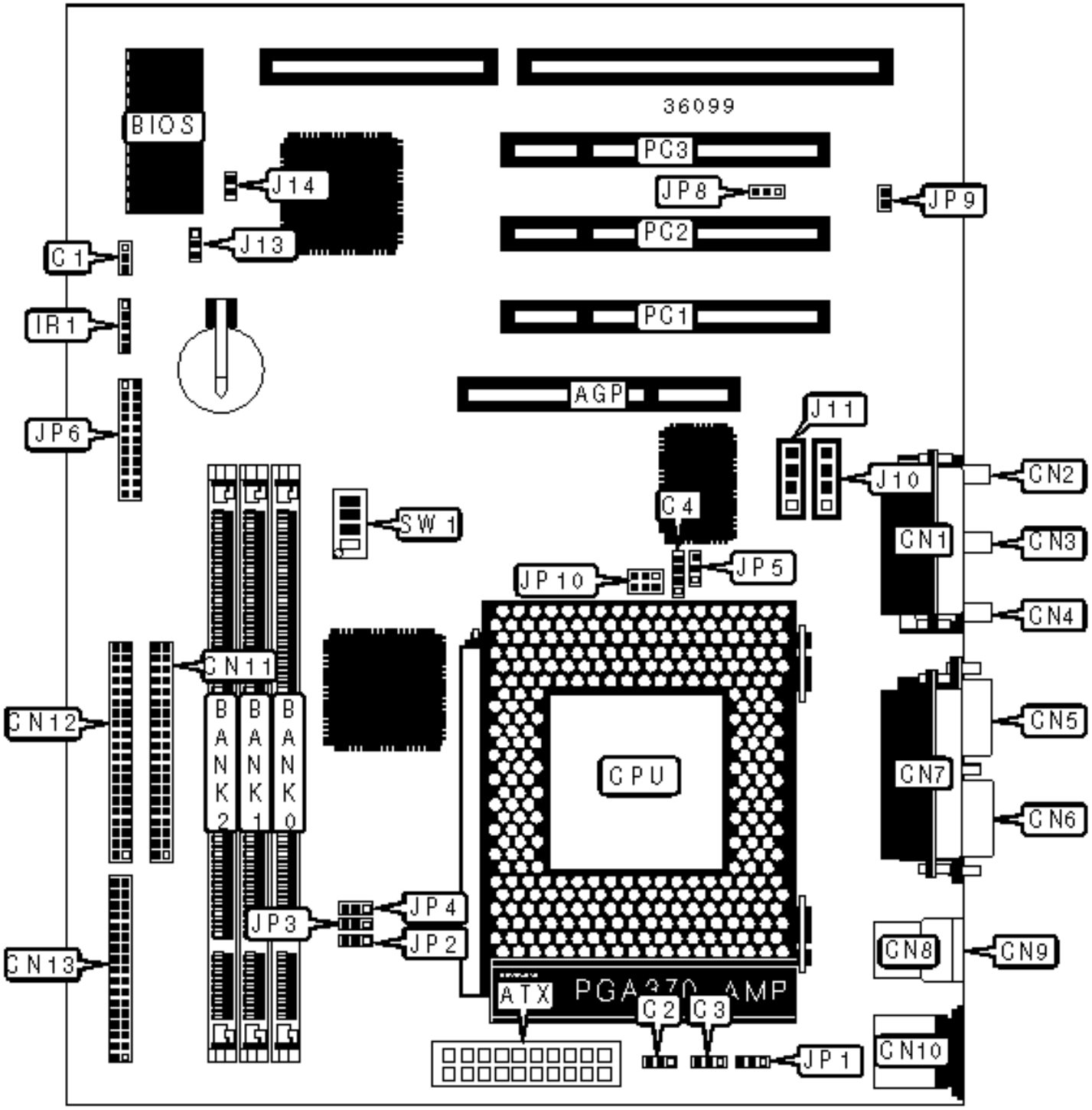

CONNECTIONS			
Purpose	Location	Purpose	Location
AGP slot	AGP	IDE interface 1	CN12
ATX power connector	ATX	Floppy drive interface	CN13
Chassis fan power	C1	IR connector	IR1
Power fan power	C2	Audio in - CD-ROM	J10
CPU fan power	C3	Audio in - CD-ROM	J11
Modem connector	C4	Wake on modem connector	J14
Game/MIDI port	CN1	Green PC LED	JP6/pins 1 & 12
Microphone in	CN2	Reset switch	JP6/pins 3 & 4
Line in	CN3	Speaker	JP6/pins 5 - 8
Line out	CN4	IDE interface LED	JP6/pins 9 & 20
Serial port 1	CN5	Green PC connector	JP6/pins 11 & 22
Serial port 2	CN6	Soft off power supply	JP6/pins 15 & 16
Parallel port	CN7	Power LED	JP6/pins 17 - 19
USB connector 1	CN8	Wake on LAN connector	JP8
USB connector 2	CN9	Case open connector	JP9
PS/2 mouse port	CN10	SB-link connector	JP10
IDE interface 2	CN11	32-bit PCI slots	PC1 - PC3

USER CONFIGURABLE SETTINGS			
Function		Label	Position
»	CMOS memory normal operation	J13	Pins 2 & 3 closed
	CMOS memory clear	J13	Pins 1 & 2 closed
»	Keyboard power on disabled	JP1	Pins 2 & 3 closed
	Keyboard power on enabled	JP1	Pins 1 & 2 closed

	On board sound enabled	JP5	Pins 1 & 2 closed
	On board sound disabled	JP5	Pins 2 & 3 closed

DIMM CONFIGURATION			
Size	Bank 0	Bank 1	Bank 2
8MB	(1) 1M x 64	None	None
16MB	(1) 2M x 64	None	None
16MB	(1) 1M x 64	(1) 1M x 64	None
24MB	(1) 2M x 64	(1) 1M x 64	None
24MB	(1) 1M x 64	(1) 1M x 64	(1) 1M x 64
32MB	(1) 4M x 64	None	None
32MB	(1) 2M x 64	(1) 1M x 64	(1) 1M x 64
32MB	(1) 2M x 64	(1) 2M x 64	None
40MB	(1) 4M x 64	(1) 1M x 64	None
40MB	(1) 2M x 64	(1) 2M x 64	(1) 1M x 64
48MB	(1) 4M x 64	(1) 1M x 64	(1) 1M x 64
48MB	(1) 4M x 64	(1) 2M x 64	None
48MB	(1) 2M x 64	(1) 2M x 64	(1) 2M x 64

DIMM CONFIGURATION (CON'T)			
Size	Bank 0	Bank 1	Bank 2
56MB	(1) 4M x 64	(1) 2M x 64	(1) 1M x 64
64MB	(1) 8M x 64	None	None
64MB	(1) 4M x 64	(1) 2M x 64	(1) 2M x 64
64MB	(1) 4M x 64	(1) 4M x 64	None
72MB	(1) 8M x 64	(1) 1M x 64	None

72MB	(1) 4M x 64	(1) 4M x 64	(1) 1M x 64
80MB	(1) 8M x 64	(1) 1M x 64	(1) 1M x 64
80MB	(1) 8M x 64	(1) 2M x 64	None
80MB	(1) 4M x 64	(1) 4M x 64	(1) 2M x 64
88MB	(1) 8M x 64	(1) 2M x 64	(1) 1M x 64
96MB	(1) 8M x 64	(1) 2M x 64	(1) 2M x 64
128MB	(1) 16M x 64	None	None
128MB	(1) 8M x 64	(1) 4M x 64	(1) 4M x 64
128MB	(1) 8M x 64	(1) 8M x 64	None
136MB	(1) 16M x 64	(1) 1M x 64	None
144MB	(1) 8M x 64	(1) 8M x 64	(1) 2M x 64
152MB	(1) 16M x 64	(1) 2M x 64	(1) 1M x 64
160MB	(1) 16M x 64	(1) 2M x 64	(1) 2M x 64
160MB	(1) 16M x 64	(1) 4M x 64	None
160MB	(1) 8M x 64	(1) 8M x 64	(1) 4M x 64
168MB	(1) 16M x 64	(1) 4M x 64	(1) 1M x 64
176MB	(1) 16M x 64	(1) 4M x 64	(1) 2M x 64
192MB	(1) 16M x 64	(1) 4M x 64	(1) 4M x 64
192MB	(1) 16M x 64	(1) 8M x 64	None
192MB	(1) 8M x 64	(1) 8M x 64	(1) 8M x 64
256MB	(1) 32M x 64	None	None
256MB	(1) 16M x 64	(1) 8M x 64	(1) 8M x 64
264MB	(1) 32M x 64	(1) 1M x 64	None
272MB	(1) 32M x 64	(1) 1M x 64	(1) 1M x 64
272MB	(1) 32M x 64	(1) 2M x 64	None
288MB	(1) 32M x 64	(1) 2M x 64	(1) 2M x 64

288MB	(1) 32M x 64	(1) 4M x 64	None
384MB	(1) 32M x 64	(1) 16M x 64	None
384MB	(1) 16M x 64	(1) 16M x 64	(1) 16M x 64
512MB	(1) 32M x 64	(1) 16M x 64	(1) 16M x 64
512MB	(1) 32M x 64	(1) 32M x 64	None
768MB	(1) 32M x 64	(1) 32M x 64	(1) 32M x 64
384MB	(1) 16M x 64	(1) 16M x 64	(1) 16M x 64
Note: Board accepts EDO & SDRAM memory. Maximum SDRAM is 384MB. Maximum EDO is 768MB.			

CACHE CONFIGURATION

Note: 128KB cache is located on the Celeron CPU.

CPU SPEED SELECTION

CPU speed	Clock speed	Multiplier	JP2	JP3	JP4
300MHz	66MHz	4.5x	2 & 3	2 & 3	2 & 3
333MHz	66MHz	5x	2 & 3	2 & 3	2 & 3
366MHz	66MHz	5.5x	2 & 3	2 & 3	2 & 3
400MHz	66MHz	6x	2 & 3	2 & 3	2 & 3
433MHz	66MHz	6.5x	2 & 3	2 & 3	2 & 3
Note: Pins designated should be in the closed position.					

CPU SPEED SELECTION (CON'T)

CPU speed	Clock speed	Multiplier	SW1/1	SW1/2	SW1/3	SW1/4
300MHz	66MHz	4.5x	Off	On	Off	On
333MHz	66MHz	5x	On	Off	Off	On
366MHz	66MHz	5.5x	Off	Off	Off	On

400MHz	66MHz	6x	On	On	On	Off
433MHz	66MHz	6.5x	Off	On	On	Off