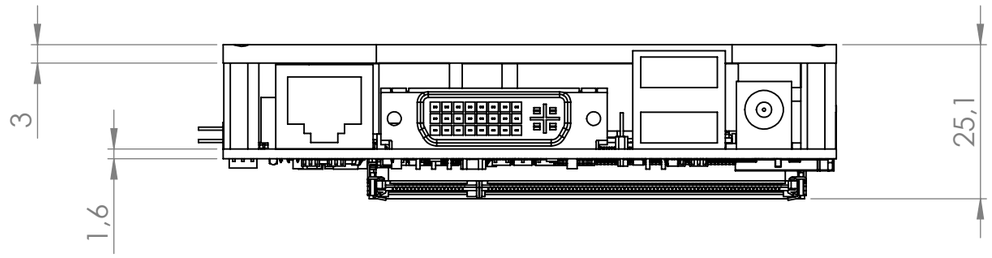

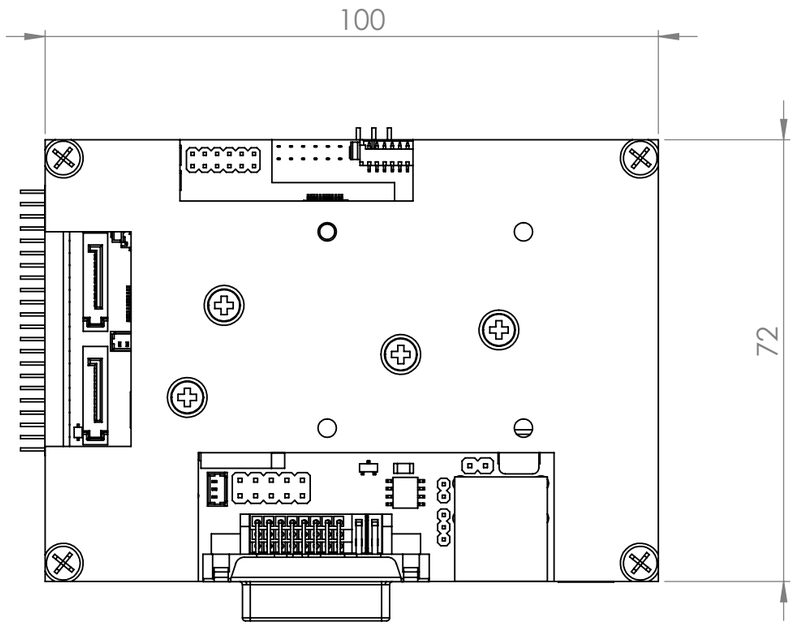

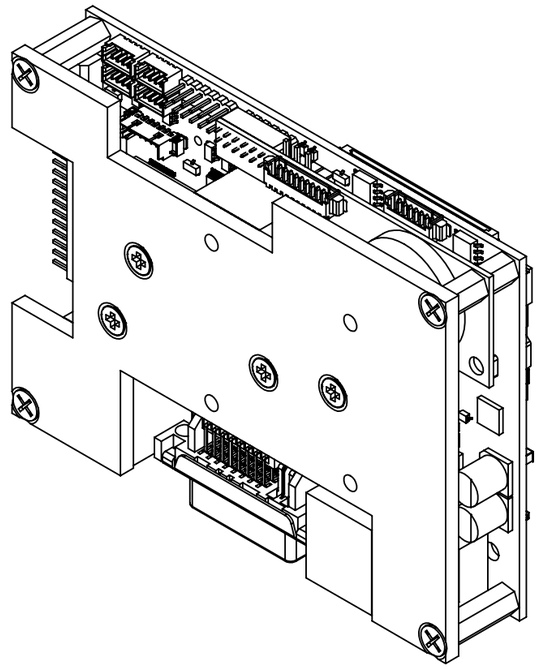

preliminary

kontron

Unit: mm

REVISION 0.4.0

Rev.	Descrip.	Date	Name
1	new version	19.05.2010	HAM

TITLE:

pITX-SP with mounted heatspreader

DWG NO.

A3

WEIGHT:

SCALE:1:1

SHEET 1 OF 4

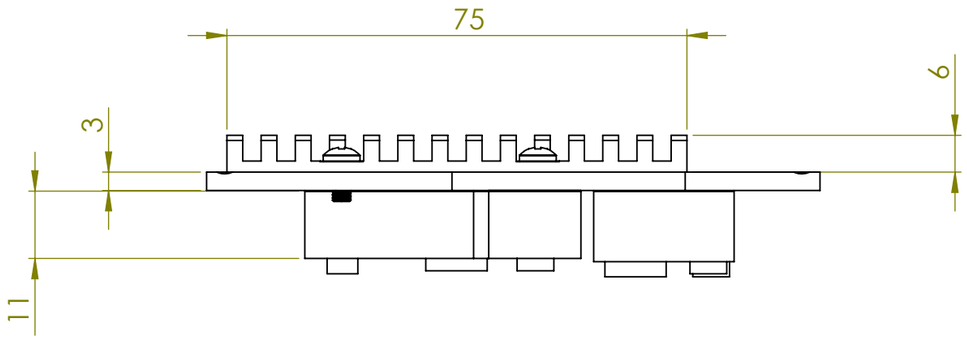

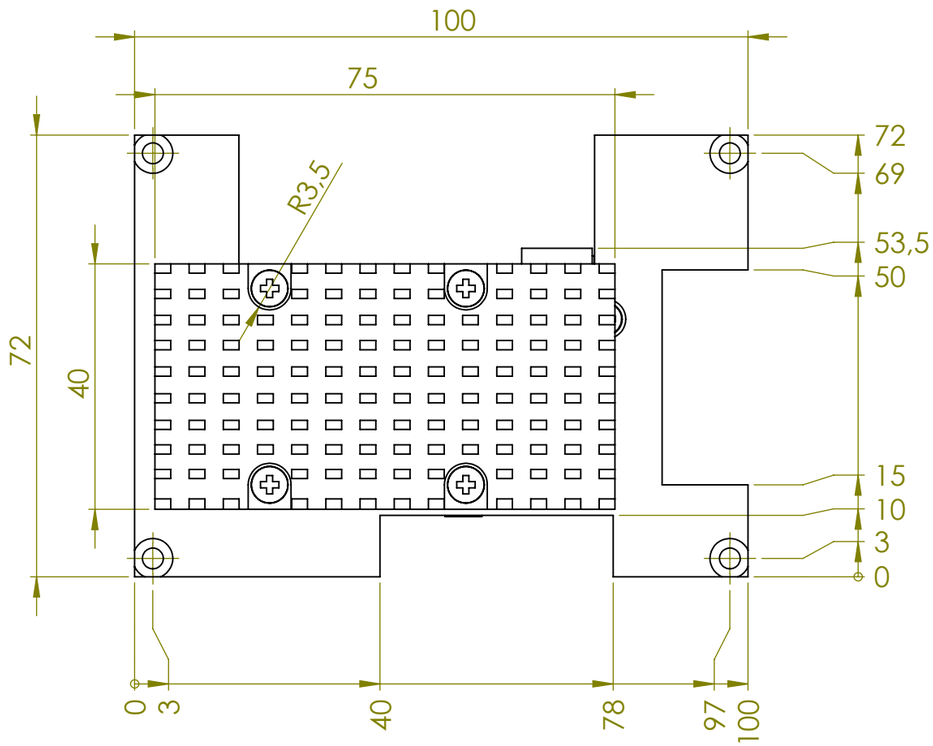

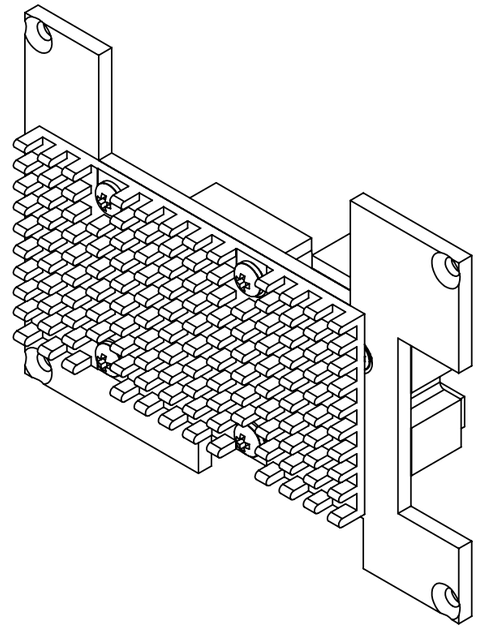

preliminary

kontron

Unit: mm

REVISION 0.4.0

Rev.	Descrip.	Date	Name
1	new version	19.05.2010	HAM

TITLE:

pITX-SP heatspreader

DWG NO.

A3

WEIGHT:

SCALE:1:1

SHEET 2 OF 4

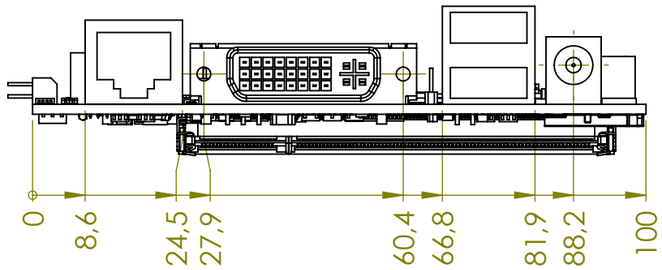

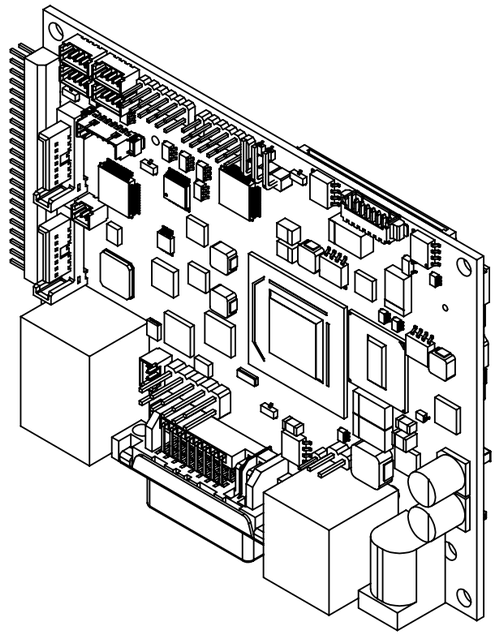

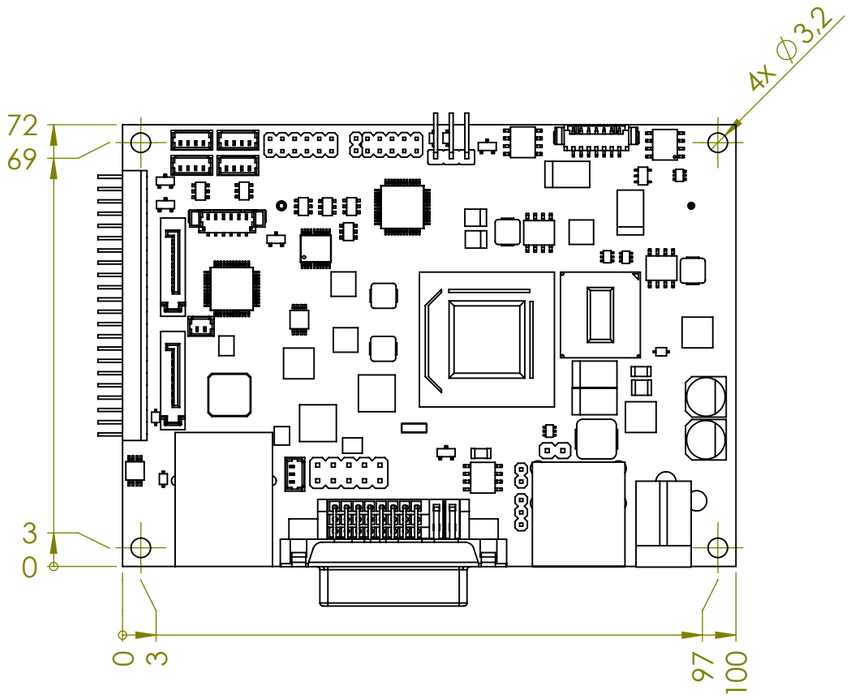

preliminary

kontron

Unit: mm

REVISION 0.4.0

Rev.	Descrip.	Date	Name
1	new version	19.05.2010	HAM

TITLE:

pITX-SP without heatspreader

DWG NO.

A3

WEIGHT:

SCALE:1:1

SHEET 3 OF 4

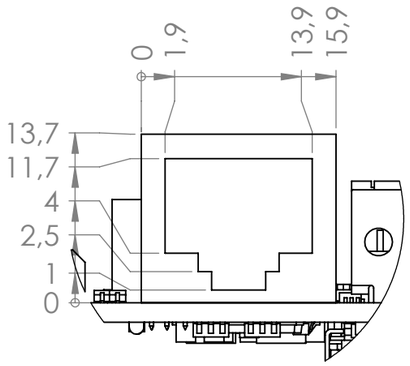

DETAIL A
SCALE 2 : 1

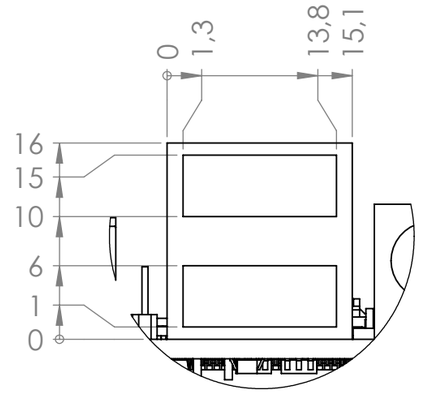

DETAIL C
SCALE 2 : 1

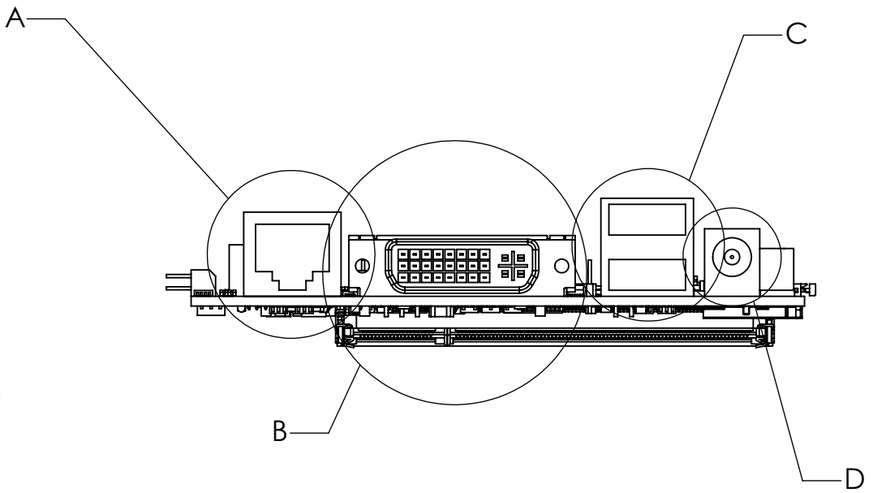

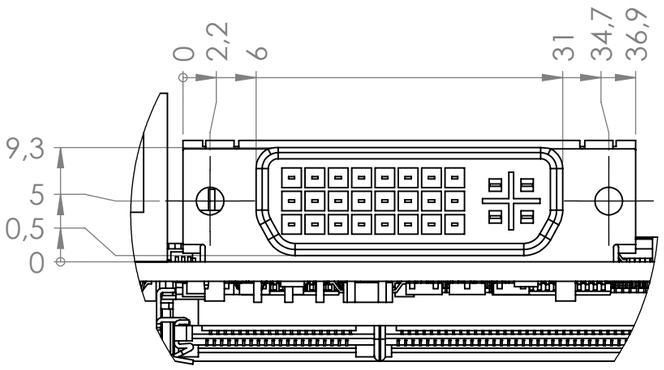

DETAIL B
SCALE 2 : 1

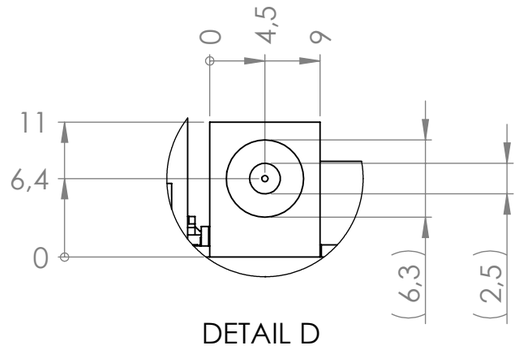

DETAIL D
SCALE 2 : 1

preliminary

kontron

Unit: mm

REVISION 0.4.0

Rev.	Descrip.	Date	Name
1	new version	16.05.2010	HAM

TITLE:

pITX-SP without heatspreader

DWG NO.

A3

WEIGHT:

SCALE:1:1

SHEET 4 OF 4