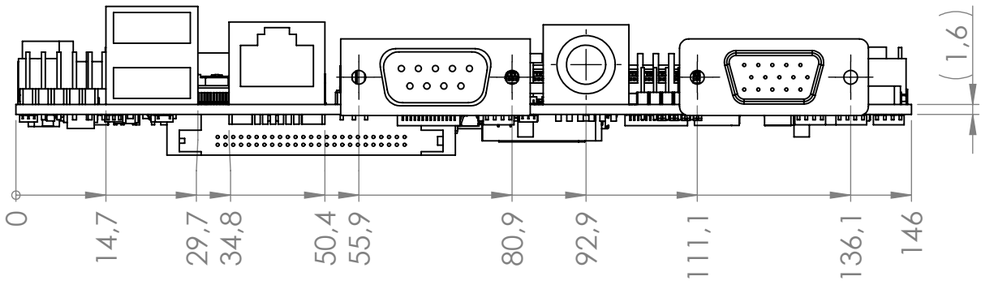

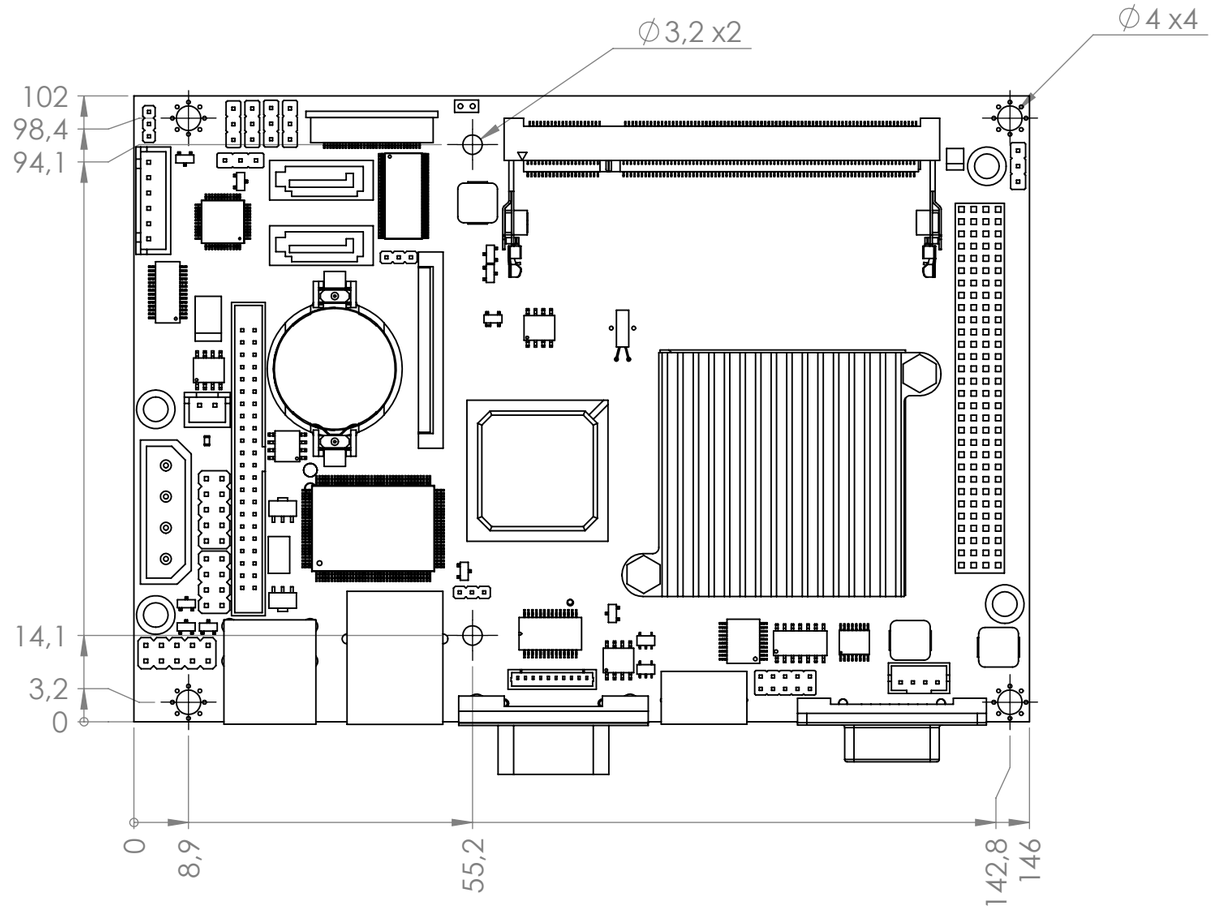

preliminary

kontron

Unit: mm

REVISION ?.?.?

Rev.	Descrip.	Date	Name
1	1. Edit	28.09.2009	LST

TITLE:

JRex plus-LX

DWG NO.

A3

WEIGHT:

SCALE:1:1

SHEET 1 OF 2

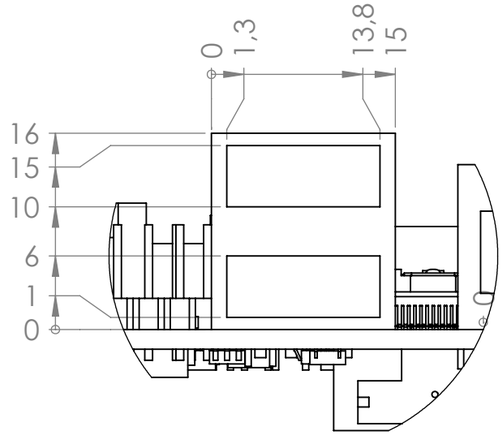

DETAIL A
MAßSTAB 2 : 1

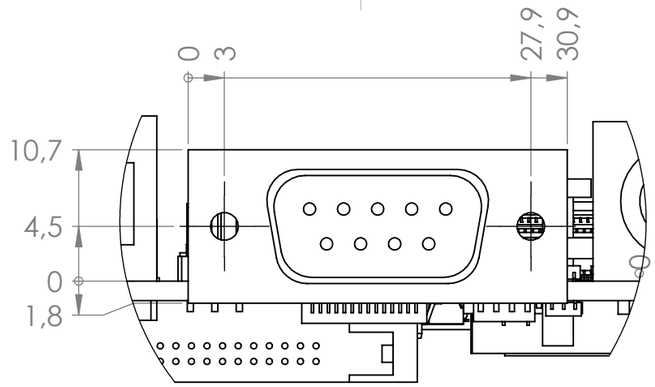

DETAIL C
MAßSTAB 2 : 1

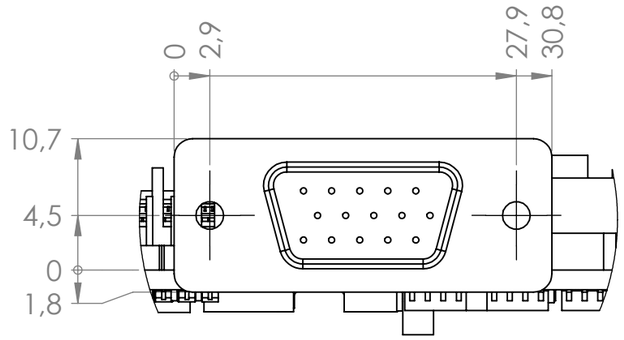

DETAIL E
MAßSTAB 2 : 1

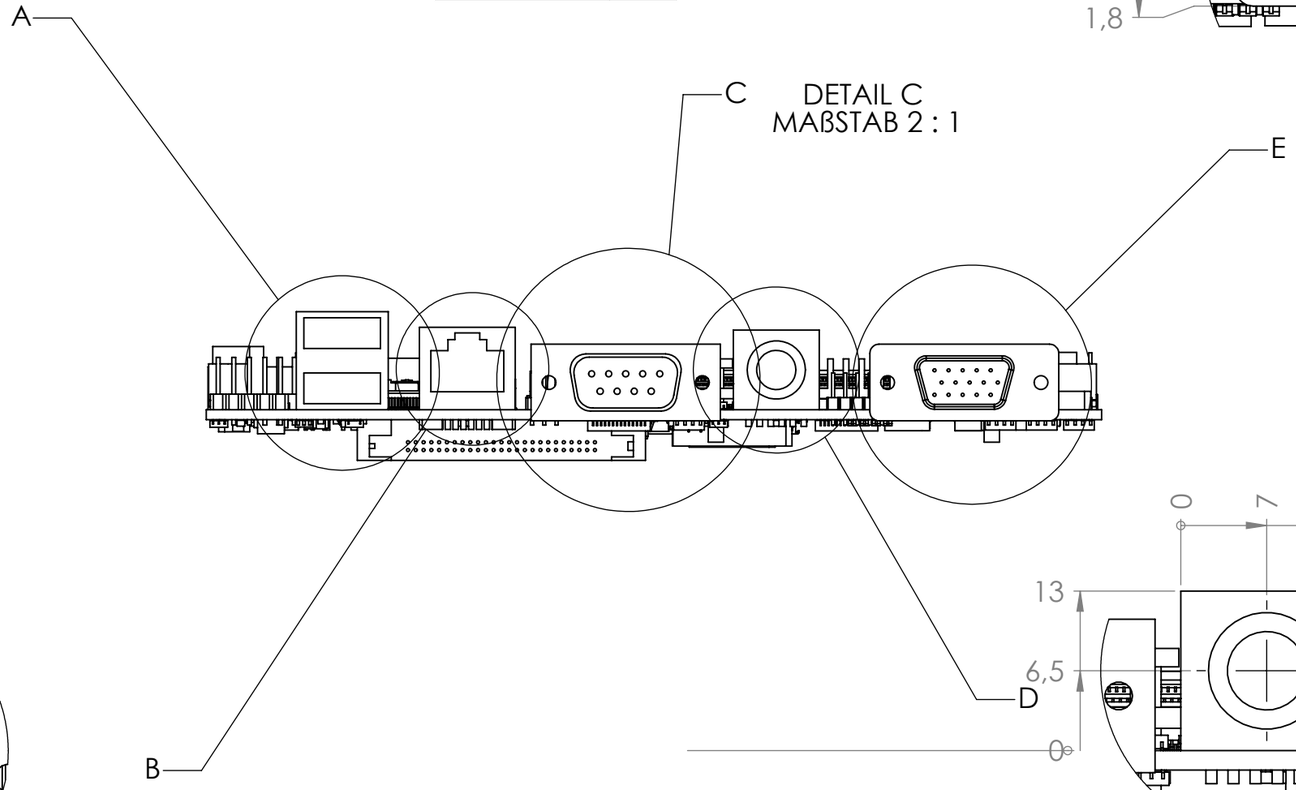

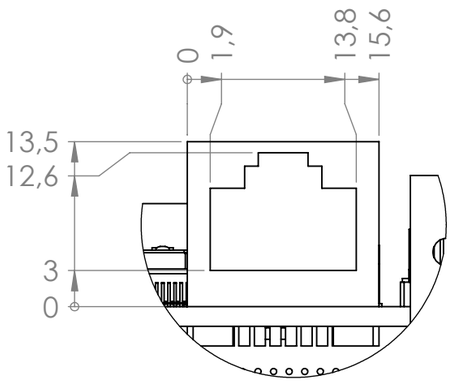

DETAIL B
MAßSTAB 2 : 1

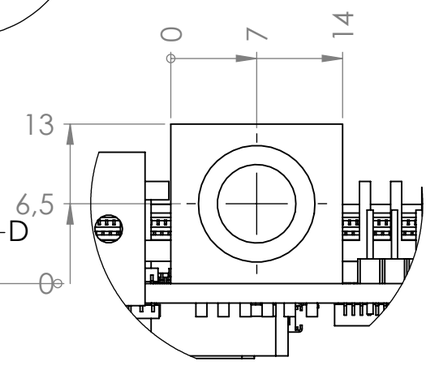

DETAIL D
MAßSTAB 2 : 1

preliminary

kontron

Unit: mm

REVISION ?.?.?

Rev.	Descrip.	Date	Name
1	1. Edit	28.09.2009	LST

TITLE:

JRex plus-LX

DWG NO.

A3

WEIGHT:

SCALE:1:1

SHEET 2 OF 2