TCI (Trident Computer)
ET4W32L1 VLB

Card Type	Video card
Video Chip Set	ET4000W32i
Maximum Video Memory	2MB RAM
Data Bus	32-bit VESA Local Bus
Video Types Supported	XVGA
Highest Resolution Supported	1280 x 1024

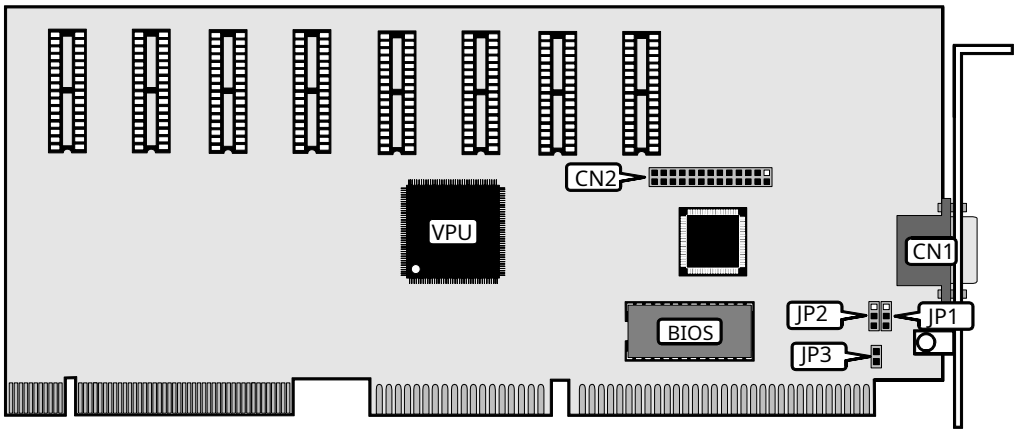

CONNECTIONS			
Function	Label	Function	Label
15-pin analog video port	CN1	Feature connector	CN2

USER CONFIGURABLE SETTINGS		
Setting	Label	Position
í IRQ9 enabled	JP3	Closed
IRQ9 disabled	JP3	Open
í Memory WS 4 I/O WS 4		JP1 2-3,JP2 2-3
Memory WS 3 I/O WS 3		JP1 2-3,JP2 1-2
í Memory WS 2 I/O WS 4		JP1 1-2,JP2 2-3
Memory WS 1 I/O WS 3		JP1 1-2,JP2 1-2