Data Technology Corporation

DTC-5150BX

DISK CONTROLLER INSTALLATION GUIDE

2775 Northwestern Parkway
Santa Clara, CA 95051
Telephone (408) 496-0434
TWX 910-338-2044

09-00134-Rev-02
APRIL 20, 1984

DATA TECHNOLOGY CORPORATION

5150BX DISK CONTROLLER

INSTALLATION GUIDE

DTC part number 09-00134. Revision 02, 20-April-84.

Data Technology Corporation

Main Office:

2775 Northwestern Parkway
Santa Clara, CA 95051
(408) 496-0434

Eastern Region Sales Office:

15 Wiggins Avenue
Bedford, MA 01730
(617) 275-4044

A Note on Compatibility

In this manual, reference will be made to use of the DTC-5150BX in an "IBM PC or XT". Some early models of the IBM PC do not contain ROM BIOS code to allow you to boot DOS from the hard disk. Otherwise, the DTC-5150BX will function correctly in any IBM PC or XT.

The DTC-5150BX will also operate properly in most "IBM-compatible" computers. Please contact DTC if you have questions on this subject.

Software Driver SD-52 is available from DTC to allow convenient use of the 5150BX with the earlier models of IBM PC and with some compatibles. Contact your vendor or DTC for more information.

A Note on FORMAT Programs

It has been demonstrated that PC-DOS 2.0 has an error in its FORMAT program, which is used in section 4 of this manual. The program is supposed to flag media defects on the disk. However, this feature may not work correctly. This would result in corrupted data.

The FORMAT program in PC-DOS 2.1 does not have this problem and will correctly map out any defects on the disk up to a maximum capacity of 16 megabytes per drive.

Still, when using larger capacity drives (over 16 megabytes), caution should be taken when using PC-DOS 2.1. Defects in the area past 16 megabytes may cause errors in execution of the FORMAT program.

The DTC-5150BX with driver version BXD5 and later allows one physical drive to be divided into two logical drives. This will make one drive look like both C: and D: drives to DOS. Since each will be half the total capacity, a single drive with up to 32 megabytes can be used safely with this feature, using the PC-DOS 2.1 FORMAT program. See Appendix B for details on the "split" feature.

TABLE OF CONTENTS

FIGURES

1.0 Introduction

1.1 System Overview

The DTC-5150BX Hard Disk Controller allows use of one or two ST-506 type industry standard Winchester disk drives under IBM PC DOS V2.0 on an IBM PC or XT.

This document provides the procedure for installation and use of the controller and drive in such a system.

1.2 Minimum System Requirements

The following is the minimum set of hardware for operation of the system:

a. IBM 5150 Personal Computer (or equivalent)
b. one 5-1/4 inch floppy diskette drive
c. IBM 5-1/4 inch diskette drive installation manual (in Section 5 of the IBM PC "Guide to Operations")
d. an available system expansion slot in the computer (The leftmost slot is not acceptable. See section 2.4)
e. DTC-5150BX controller
f. industry standard ST-506 type Winchester disk drive
g. appropriate cables to connect disk drive to DTC-5150BX (see Section 2.3a)

The following is the minimum set of software for operation of the system:

a. IBM PC DOS V2.0 and appropriate documentation

WARNING!

1. YOU MUST HAVE THE MINIMUM RESOURCES LISTED ABOVE FOR THE SYSTEM TO WORK PROPERLY. PLEASE DO NOT ATTEMPT TO PROCEED WITHOUT THE PROPER RESOURCES.

2. PLEASE READ THIS INSTALLATION GUIDE CAREFULLY BEFORE STARTING INSTALLATION.

3. MANY DISK DRIVES REQUIRE MORE POWER THAN THE IBM PC CAN SUPPLY. YOUR ADD-IN DRIVE PLUS THE DTC-5150BX CONTROLLER MUST NOT REQUIRE MORE THAN THE SPARE CAPACITY OF THE COMPUTER POWER SUPPLY. The DTC-5150BX Controller draws approximately 1.8 amps at +5 volts. Check Hardware Reference manuals for other equipment on your system to determine total current draw for the system, and compare with the capacity of your power supply.

2.0 Hardware Installation

Note: Please refer to the publication DTC-5150BX Disk Controller Specification for detailed information on the functionality of the controller. The Specification is the final definition of the function and performance of this device.

2.1 Preliminary Setup

a. Remove diskettes from all drives.

b. Power down any external system components.

c. Power down IBM PC.

d. Unplug all system components from wall sockets.

e. Disconnect all cables from the back of the IBM PC System Unit. You may wish to label each cable with a piece of masking tape to remind you where it will be reconnected.

2.2 Opening the System Unit

a. Remove the two cover mounting screws found at the rear of the System Unit at the left and right bottom corners. Retain the screws.

b. Slide the top cover forward until it stops, and then tilt the front up and remove. Set the top cover aside.

2.3 Initial Setup of DTC-5150BX Board

a. Check that you have the correct ribbon cables, according to the following situations:

1. Mounting one drive internal to System Unit:
   one 20-conductor cable
   one 34-conductor cable

2. Mounting one drive external to System Unit:
   one 20-conductor cable, 36" minimum
   one 34-conductor cable, 36" minimum

3. Mounting two drives internal to System Unit:
   two 20-conductor cables
   one 34-conductor daisy-chain cable

4. Mounting two drives external to System Unit:
   two 20-conductor cables, 36" minimum
   one 34-conductor daisy-chain cable, 36" minimum

b. Plug the 34-pin (J1) cable in the 34-pin connector on the DTC-5150BX. If you are connecting two hard disks, use a daisy-chain cable which has connectors for two drives. The red stripe on all cables should be toward the bottom of the connector, corresponding to pin number one on the controller (See Figure 1). The cable extends in the direction of the end of the board.

c. Plug the 20-pin (J2 or J3) cable into either one of the 20-pin connectors on the DTC-5150BX, also oriented with the red stripe on the bottom. If you are connecting two drives, plug in both 20-pin cables.

Note: The drive Logical Unit Number (which will determine the DOS access letter, among other things) is determined by a setting on the disk drive, not by the choice of cable connector. See Section 2.5.
Note: The following items are intended to check for correct positions of switches and jumpers on the DTC-5150BX. These instructions only refer to default positions for these items. If you are using the controller in a nondefault way, please refer to the DTC-5150BX Disk Controller Specification for additional information.

d. Check for PROM Enable Jumper W18 (See Figure 1) installed.

e. Refer to Appendices A and B to see how to set the drive select switches (8-position switch SW1, see Figure 1). These switches must be set according to the characteristics of the drive(s) you will attach.

2.4 Connection of DTC-5150BX in System Unit

a. Look inside the System Unit. In the left rear are five expansion slots (See Figure 2). Some may already be filled. Choose one of the empty slots, avoiding the leftmost slot. Cabling is easiest from the slots toward the right, as shown in Figure 3.

WARNING: Installation of the DTC-5150BX in the leftmost slot will cause improper operation because it is partially blocked by the speaker.

b. Remove the corresponding system expansion slot cover screw, and pull out the cover (See Figure 2). Save both items.

c. Pop the plastic card guide into the predrilled holes in the front of the System Unit which correspond to that expansion slot. (See Figure 3).

d. Slide the DTC-5150BX vertically into the expansion slot, using the card guide.

e. Replace the screw in the expansion slot cover attached to the DTC-5150BX, thus securing the board into the System Unit.

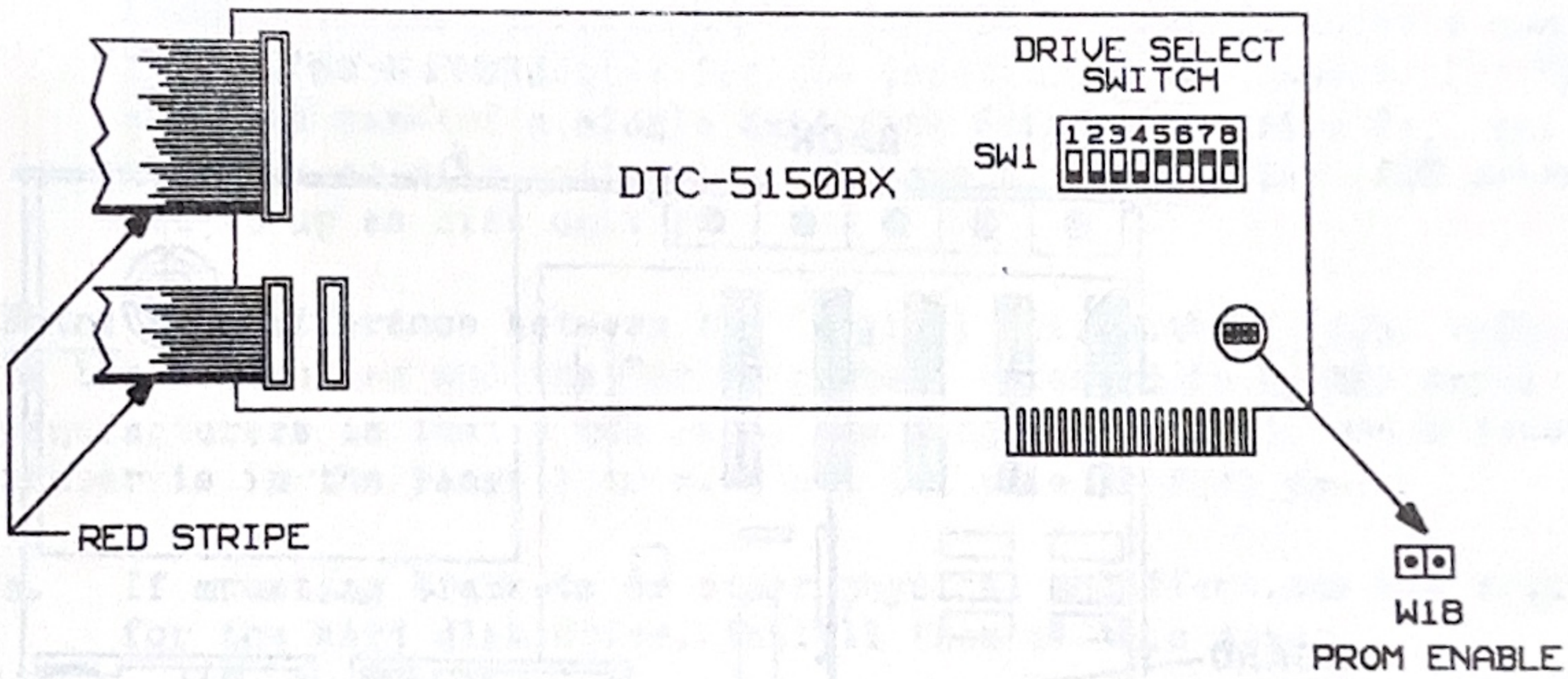

FIGURE 1. LOCATION OF JUMPERS AND SWITCHES ON DTC-5150BX

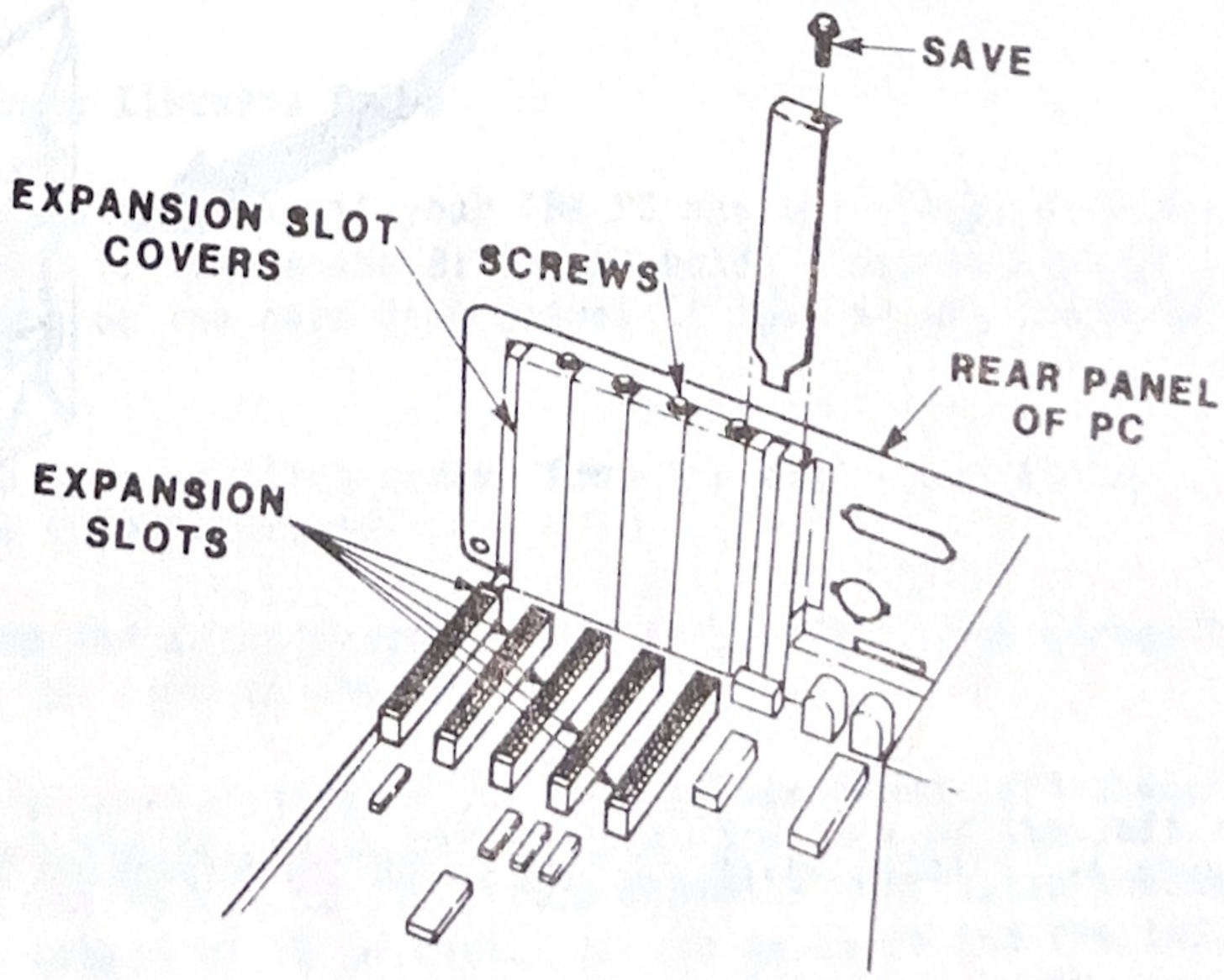

Figure 2. Expansion Slots in System Unit

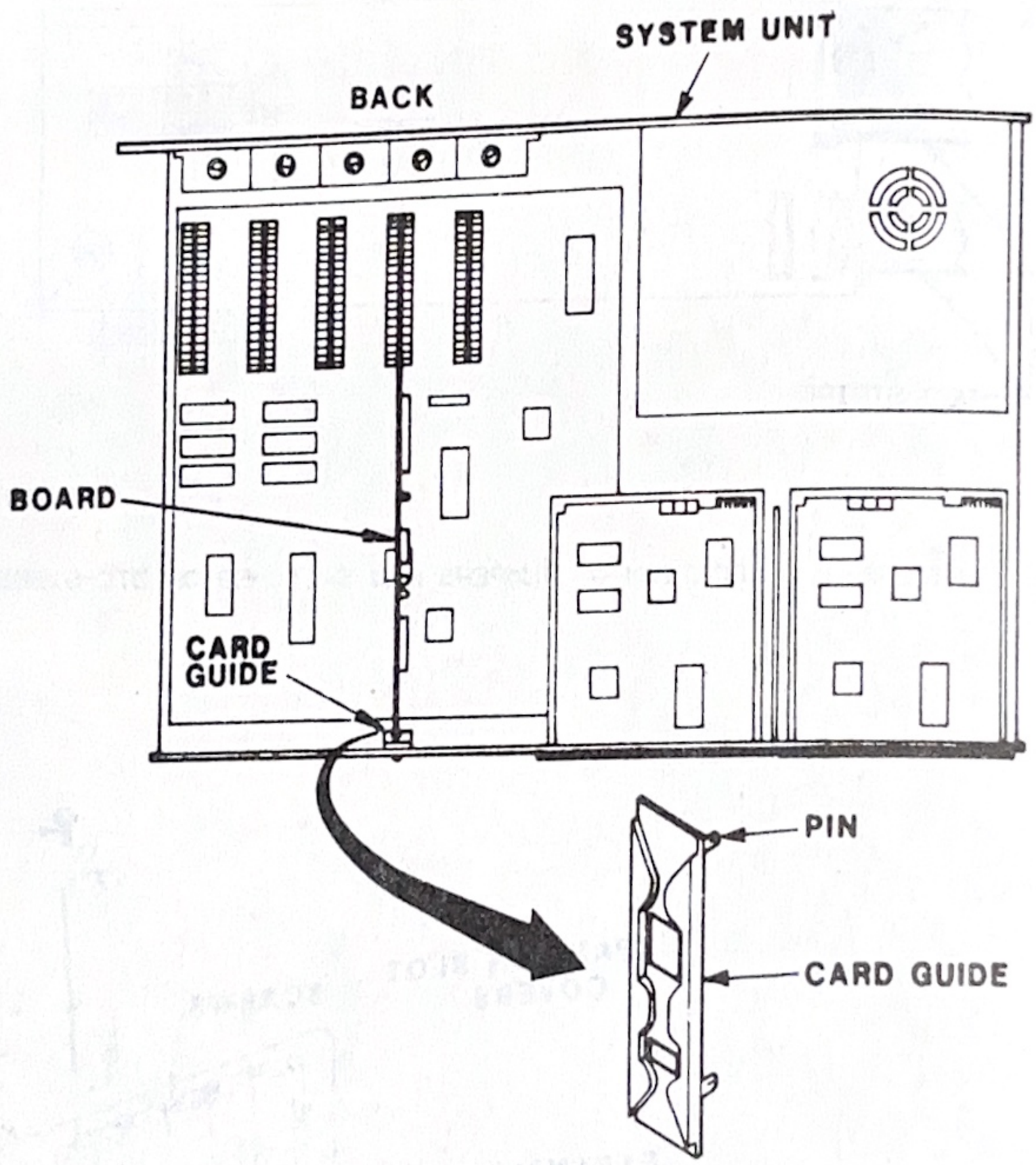

Figure 3. Installation of Card Guide for Expansion Slot

2.5 Setup of Hard Disk Unit

Note: This section applies in general to setup of hard disk units. Please refer to instructions supplied by the manufacturer of your drive for more detailed setup information.

a. Select the appropriate drive number on the hard disk drive(s). This usually takes the form of a jumper that connects two pins on the drive's printed circuit board. Consult the manufacturer's manual for the hard disk drive for the location of the jumper. For the standard case of a single hard disk drive (DOS drive C:), set up the disk as disk unit 1. If you have a second drive (DOS drive D:), set it up as disk unit 2.

Note: The difference between the "logical unit number" (LUN) referred to by the controller and the "drive number" referred to by the drive manufacturers is that a LUN is in the range 0 to (n-1), and a drive number is in the range 1 to n. Don't let this confuse you!

b. If mounting brackets or other physical modifications are required for the hard disk drive, install them at this time.

IMPORTANT: The following step must be performed to prevent damage to the drive.

c. Your drive was probably shipped with a "tie-down" pin or clip on the positioning mechanism to prevent movement of the heads during shipping. CAREFULLY REMOVE THE TIE-DOWN AT THIS TIME.

2.6 Removal of Floppy Diskette Drive

Note: This section applies only if your IBM PC has two floppy diskette drives and you intend to remove the B: (right-hand) drive to allow internal installation of the hard disk drive. If this is not the case, skip to Section 2.7.

a. Remove the two side mounting screws from the right-hand floppy diskette drive (See Figure 4).

b. Carefully slide the drive forward about an inch to allow access to the cables at the rear of the drive.

c. Unplug the large connector from the back of the right-hand diskette drive. This cable will remain connected to the back of the left (A:) diskette drive, and to the floppy diskette controller board. Put the slack length of cable neatly in the space behind the left diskette drive. Take care to prevent the cable from pressing against the switches on the System Board below.

d. Unplug the black-yellow-red power supply connector from the right-hand diskette drive. This is sometimes a tight fit; do not force it.

e. Carefully slide the drive the rest of the way out of the System Unit. It is a good idea to keep the drive in its original packing material (if available). If not, put it in a plastic bag to keep dust out. Store the removed drive in a safe place for future use.

f. Configure the IBM PC System Unit for single-floppy disk support. This is done by setting appropriate switches on the PC System Board to indicate that one drive is installed. Refer to the "5-1/4 Inch Diskette Drive" section of the "Guide to Operations" which came with your IBM PC for detailed instructions on setting these switches.

Note: The switches referred to in section 2.6f should be set to the number of floppy disk drives which will be present on the system, not including hard disk drives.

2.7 Installation of Hard Disk Unit

IMPORTANT:
- If you are mounting the hard disk drive inside the IBM PC System Unit, follow the instructions in Section 2.7.1.
- If you are mounting the hard disk drive external to the System Unit, follow the instructions in Section 2.7.2.

2.7.1 Internal Installation

This section contains instructions for placing a hard disk drive within the IBM PC System Unit cabinet, in the place normally held by the right-hand floppy diskette drive. Follow these instructions only if:

- you have no right-hand floppy drive in your PC (See Section 2.6)
- the size of the hard disk drive is appropriate to fit there
- the PC System Board is configured for a single-floppy system (See Section 2.6f)
- compatibility with the IBM PC power supply has been calculated (See Section 1.2)

WARNING: MANY DISK DRIVES REQUIRE MORE POWER THAN THE IBM PC CAN SUPPLY. YOUR ADD-IN DRIVE PLUS THE DTC-5150BX CONTROLLER MUST NOT REQUIRE MORE THAN THE SPARE CAPACITY OF THE IBM POWER SUPPLY. IF YOU REQUIRE MORE CAPACITY, YOU MUST USE AN EXTERNAL POWER SUPPLY FOR THE HARD DISK DRIVE.

a. Route cables around the other expansion cards, then around the back of the left-hand floppy disk drive, and into the area behind the hard disk (See Figure 5). Carefully bend the cables as necessary to allow access to the rear of the hard disk drive.

Note: Follow the next step (2.7b) only if a blank panel is present in front of the right-hand drive area. If you have just removed a diskette drive from this area, skip to step 2.7c.

b. On the inside of the black metal panel which covers the front of the empty area, there are two metal clips which hold it in place. The clips slide off easily if rotated to a vertical position. Rotate and remove the clips. Remove the panel.

c. Carefully insert the rear of the hard disk drive through the hole where the panel was. Slide it in most of the way.

d. In the right rear of the System Unit is a metal box with a fan hole in the top. This is the IBM PC power supply. On the left side of the box is a bundle of wires. Find the set of four wires (red, black, black, yellow) which is not in use. (There is a similar set connected to the floppy diskette drive.) This is the power cable for the drive. The power connector is keyed so as to only allow the correct mating with the connector on the drive. Plug the IBM PC power cable into the connector on your hard disk drive. If the plug does not go in easily, try turning it over.

e. Connect the two cables (one 34-pin and one 20-pin) from the DTC-5150BX controller to the hard disk drive. Be very careful of their orientation! The red stripe must correspond to pin number one on each connector.

f. Carefully slide the hard disk drive the rest of the way into the System Unit.

g. Fasten the drive in place with the two side screws (See Figure 4).

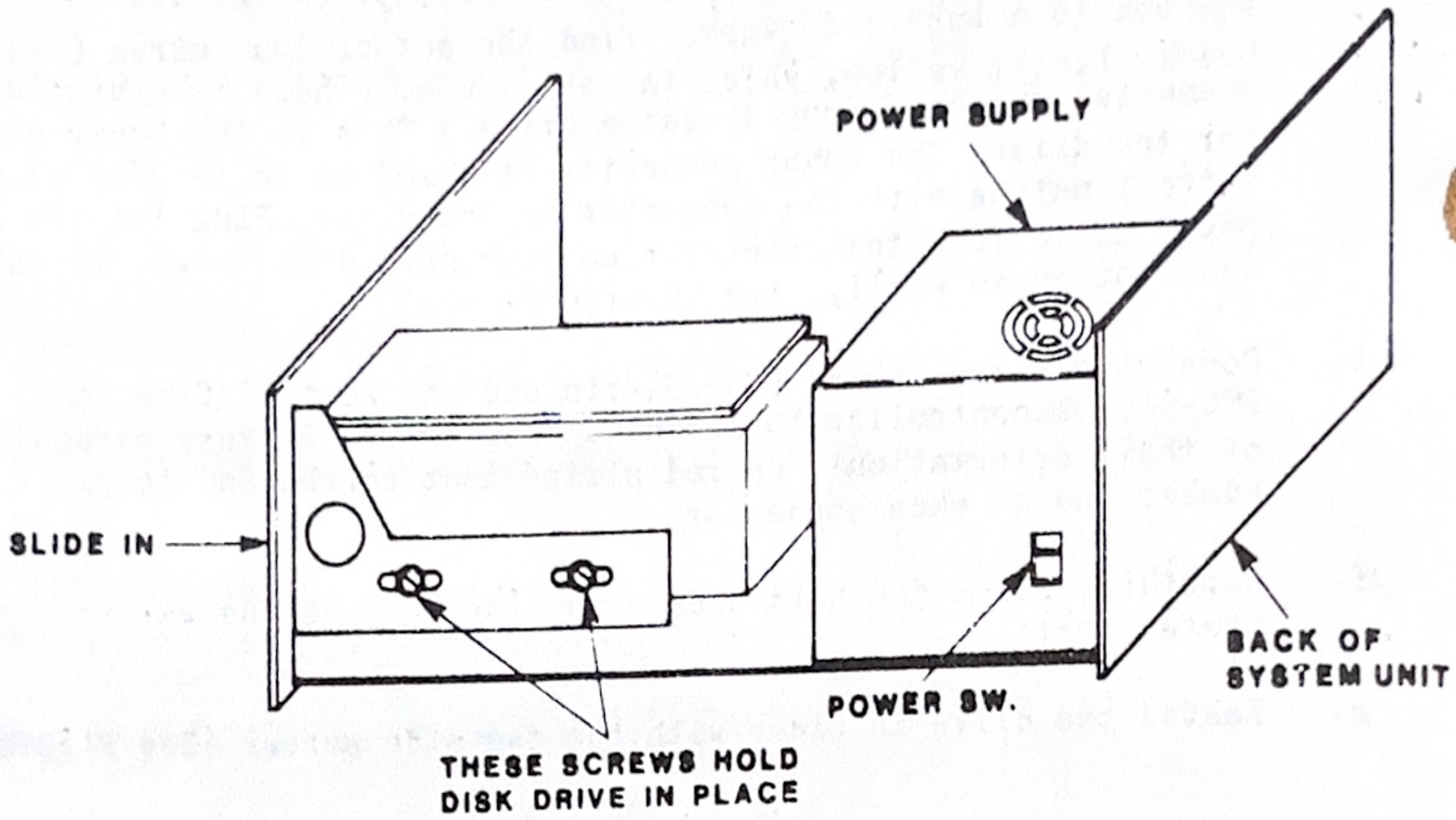

Figure 4. Fastening Internally-Mounted Drive in Place

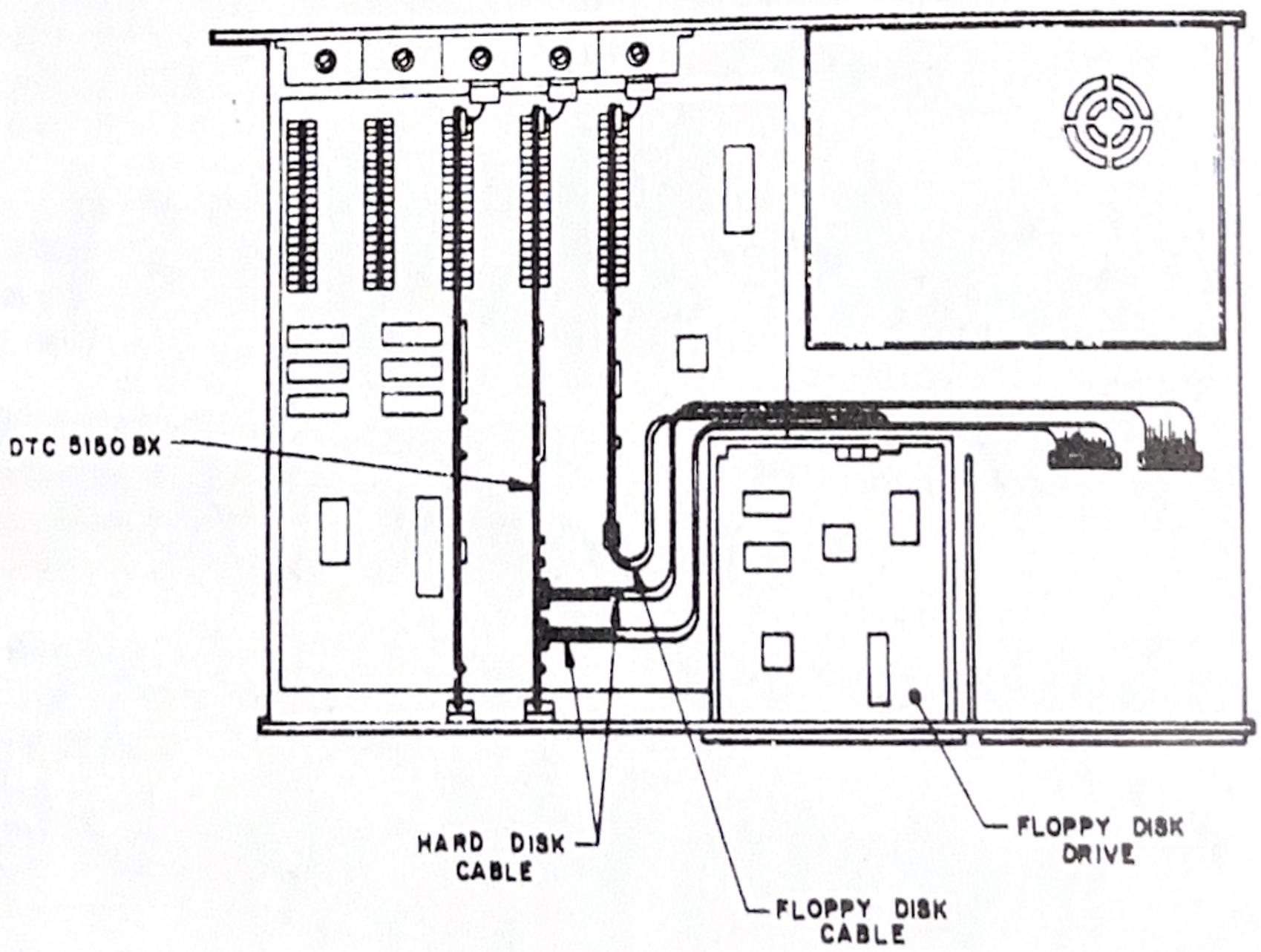

Figure 5. Routing of Cables for Internal Mounting

2.7.2 External Installation

Note: This section gives instructions for external installation assuming the use of ribbon cable, which is not in compliance with FCC Rule 47 CFR Part 15.

a. Bend the flat cables to exit from the top of the expansion slot area.

b. Run each cable horizontally over the expansion cards, so that the cables come out of the back of the System Unit above the expansion slot cover area.

c. Connect the 20-pin and 34-pin cables from the DTC-5150BX board to the hard disk drive. Be very careful of their orientation! The red stripe must correspond to pin number one on each connector. If you are installing two hard disk drives, each gets its own 20-pin cable (it does not matter which one), and the 34-pin cable is connected to both drives (See Figure 6).

d. Connect power cables to the hard disk drive from an external power supply if necessary. Consult the instruction manual for your particular disk drive for additional information.

2.8 Closing the System Unit

a. Put the top cover of the System Unit back on its tracks.

b. Slide the cover toward the rear of the unit until it is back in place. TAKE CARE THAT IT DOES NOT CATCH ON THE RIBBON CABLES.

c. Replace the two cover screws which you removed in step 2.2a.

2.9 Reconnection of Cables to External Devices

a. Reconnect all cables which you removed in step 2.1. Refer to IBM's Guide to Operations Section 2, "Setup", if you have trouble recabling the system.

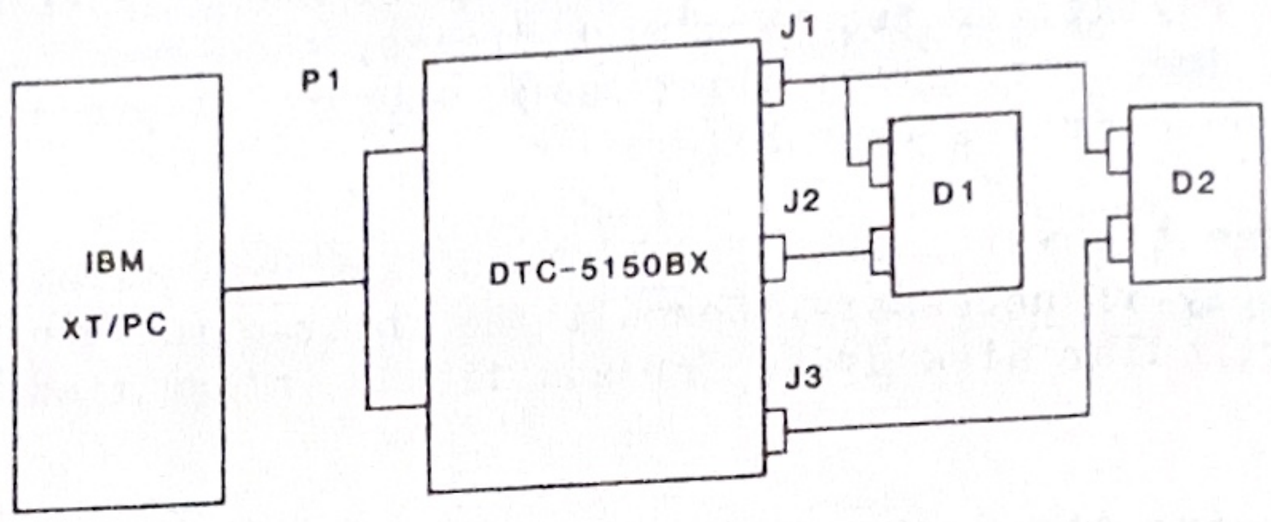

D1 & D2 - 5-1/4 INCH DISK DRIVES

J1 - DRIVE CONTROL CONNECTOR

J2 & J3 - READ/WRITE CONNECTOR

P1 - IBM XT EDGECARD CONNECTOR

Figure 6. Connection of Cables for Two-Drive System

3.0 Initial Power-Up

a. Place a copy of your normal IBM DOS 2.0 in diskette drive A.

WARNING! Do not use the original IBM release diskette; use only a copy. (Refer to DOS Manual, DISKCOPY command for information on creating a copy of a diskette.)

b. Power up the system in the normal sequence. If you have an external power supply for the hard disk, be sure it is on too.

c. Does the system come up with a message indicating the correct number of hard disks (such as "1 Hard Disk"), followed the DOS 2.0 prompt?

YES: proceed with Section 4.0, Formatting the Disk

NO: check:

- appropriate switches (wall switch, CRT) on
- recabling of system correct
- appropriate diskette installed in diskette drive

If this step cannot be successfully completed, do not continue!

Note: The hard disk will not be an active part of your system at this point; the system should behave as it did before installation.

d. If further troubleshooting is required, remove power from the system. Open the cabinet. Check cable orientation. Check switch and jumper settings on DTC-5150BX. If this does not allow the system to operate, remove the DTC-5150BX from the expansion slot and see if the system is back to normal. This will isolate the problem to the DTC-5150BX or the hard disk drive.

WARNING! Always remove power from any piece of equipment in your computer system before modifying it.

4.0 Formatting the Disk

Warning! The DTC Hard Disk Formatting Utility will erase all data on the hard disk! It should only be run once, the first time you install your hard disk.

a. After starting DOS successfully, execute the command:
   DEBUG
(If your DOS came on two diskettes, the DEBUG program may be on the second diskette.) Debug will respond with a "-" prompt.

b. Respond to the "-" prompt with the command:
   G=C800:5

c. This should initiate the Hard Disk Formatting Utility (See Figure 7). Respond to its prompt by entering the number of the hard disk you wish to format. The first hard disk is 1, the second is 2.

d. The light on the hard disk drive should come on and remain on for about a minute (depending on the size of the disk). If you get an error message, be sure you entered the correct disk number and that the disk power is on.

e. The program will exit to DOS and you will receive the normal "A>" prompt.

f. If you have more than one hard disk, repeat this procedure.

g. Proceed with the normal DOS procedure for bringing up a hard disk using the FDISK and FORMAT commands. See the DOS 2.0 Manual for further instructions.

Note: Subsequent operation of the system should be exactly as defined in the DOS 2.0 Manual for the IBM XT system.

```
A>debug
-g=c800:5
DTC-5150BX Hard Disk Formatting Utility v1.0
This program will erase all data on the specified hard disk.
Enter a hard disk number (1 to 8) or press "0" to quit: 1

Creating DTC Format...
Disk is formatted successfully.
Now, proceed to FDISK and FORMAT. (Refer to DOS manual.)

A>
```

Figure 7. Execution of Formatting Program

Appendix A Drivetype Switch Settings

The following information pertains to the DTC-5150BX when used with DTC's BXD software prom. Customer-developed software may have different characteristics. This information refers to DTC software release BXD-5.

Refer to Appendix B for instructions on how to set up the switches.

Key: OP = open = off = (1)
CL = closed = on = (0)
xx = don't care

Drive Number is shown as 1 or 2 and corresponds to the Drive Select Jumper on the disk drive. When two drives are used, combine the switch settings according to drive number. **(See Switch Setting DTC #F for special function).**

Drive	Drive Number	Switch Settings 1	2	3	4	5	6	7	8
IBM #0: 5MB, 2 heads, *	1	xx	xx	CL	CL	xx	xx	CL	CL
306 cyl	2	CL	CL	xx	xx	CL	CL	xx	xx
IBM #1: 26MB, 8 heads,	1	xx	xx	OP	CL	xx	xx	CL	CL
375 cyl	2	OP	CL	xx	xx	CL	CL	xx	xx
IBM #2: 15MB, 6 heads,	1	xx	xx	CL	OP	xx	xx	CL	CL
306 cyl	2	CL	OP	xx	xx	CL	CL	xx	xx
IBM #3: 10MB, 4 heads,	1	xx	xx	OP	OP	xx	xx	CL	CL
306 cyl	2	OP	OP	xx	xx	CL	CL	xx	xx
DTC #4: 5MB, 2 heads, *	1	xx	xx	CL	CL	xx	xx	OP	CL
306 cyl	2	CL	CL	xx	xx	OP	CL	xx	xx
DTC #5: 28MB, 5 heads,	1	xx	xx	OP	CL	xx	xx	OP	CL
640 cyl	2	OP	CL	xx	xx	OP	CL	xx	xx
DTC #6: 20MB, 8 heads,	1	xx	xx	CL	OP	xx	xx	OP	CL
306 cyl	2	CL	OP	xx	xx	OP	CL	xx	xx
DTC #7: Reserved for non-	1	xx	xx	OP	OP	xx	xx	OP	CL
standard drives.	2	OP	OP	xx	xx	OP	CL	xx	xx
Contact DTC for information.									
DTC #8: 18MB, 4 heads,	1	xx	xx	CL	CL	xx	xx	CL	OP
512 cyl	2	CL	CL	xx	xx	CL	OP	xx	xx
DTC #9: 27MB, 6 heads,	1	xx	xx	OP	CL	xx	xx	CL	OP
512 cyl	2	OP	CL	xx	xx	CL	OP	xx	xx
DTC #A: 10MB, 2 heads,	1	xx	xx	CL	OP	xx	xx	CL	OP
612 cyl	2	CL	OP	xx	xx	CL	OP	xx	xx

*** NOTE: For improved performance, use drive #4 instead of #0 with drives having buffered step capability.**

(Appendix A, Drivetype Switch Settings, continued from previous page)

Drive	Drive Number	Switch Settings 1	2	3	4	5	6	7	8
DTC #B: 22MB, 4 heads, 640 cyl	1	xx	xx	OP	OP	xx	xx	CL	OP
	2	OP	OP	xx	xx	CL	OP	xx	xx
DTC #C: 18MB, 3 heads, 697 cyl	1	xx	xx	CL	CL	xx	xx	OP	OP
	2	CL	CL	xx	xx	OP	OP	xx	xx
DTC #D: 30MB, 5 heads, 697 cyl	1	xx	xx	OP	CL	xx	xx	OP	OP
	2	OP	CL	xx	xx	OP	OP	xx	xx
DTC #E: 33MB, 6 heads, 640 cyl	1	xx	xx	CL	OP	xx	xx	OP	OP
	2	CL	OP	xx	xx	OP	OP	xx	xx
DTC #F: Special setting. See Appendix B.	1	(n.a.)							
	2	OP	OP	xx	xx	OP	OP	xx	xx

1 2 3 4 5 6 7 8

C O C O C C C C

* Note: For improved performance, use drive #4 instead of #0 with drives having buffered step capability.

Appendix B Drivetype Switch Setup Instructions

Choose the situation which applies to your system, and follow the corresponding instructions.

1. Single-Drive System, 16 Megabytes or Less

a. Locate your drive in the table in Appendix A, according to its parameters.

b. Move across to the "Drive Number 1" setting.

c. Set switches 3, 4, 7, and 8 according to the chart.

2. Single-Drive System, "Split"

Note 1: Internal limitations in DOS 2.0 prevent a single drive letter (such as "C:") from accessing over 16 megabytes of disk space without use of special software. DTC's BXD-5 provides a way around this for users of drives with higher capacities. When the switches are set as indicated below, the system will view a single drive as if it was two drives. The physical space on the drive will be split into two halves. For example, a 30 megabyte drive will appear to be two 15 megabyte drives, called "C:" and "D:". This method allows support of drives with up to 32 megabytes of storage.

Note 2: This mode can optionally be used for drives with capacities under 16 megabytes, as well as those over 16 megabytes.

a. Locate your drive in the table in Appendix A, according to its parameters.

b. Move across to the "Drive Number 1" setting.

c. Set switches 3, 4, 7, and 8 according to the chart.

d. Set switches 1, 2, 5, and 6 to the open (off) position.

3. Two-Drive System, Each 16 Megabytes or Less

a. Locate your first drive in the table in Appendix A, according to its parameters. This drive should be set for Drive Select 1.

b. Move across to the "Drive Number 1" setting.

c. Set switches 3, 4, 7, and 8 according to the chart.

d. Locate your second drive in the table in Appendix A, according to its parameters. This drive should be set for Drive Select 2.

e. Move across to the "Drive Number 2" setting.

f. Set switches 1, 2, 5, and 6 according to the chart.

DTC