BI-039B MATE-I/O 2SPG/2FDC/AHDC CARD

1.0 BOARD OUTLINE

The BI-039B provides TWO SERIALS, GAME, PARALLEL, two drives, FDC, and AT BUS HDC interfaces for IBM PC/AT or compatible computers.

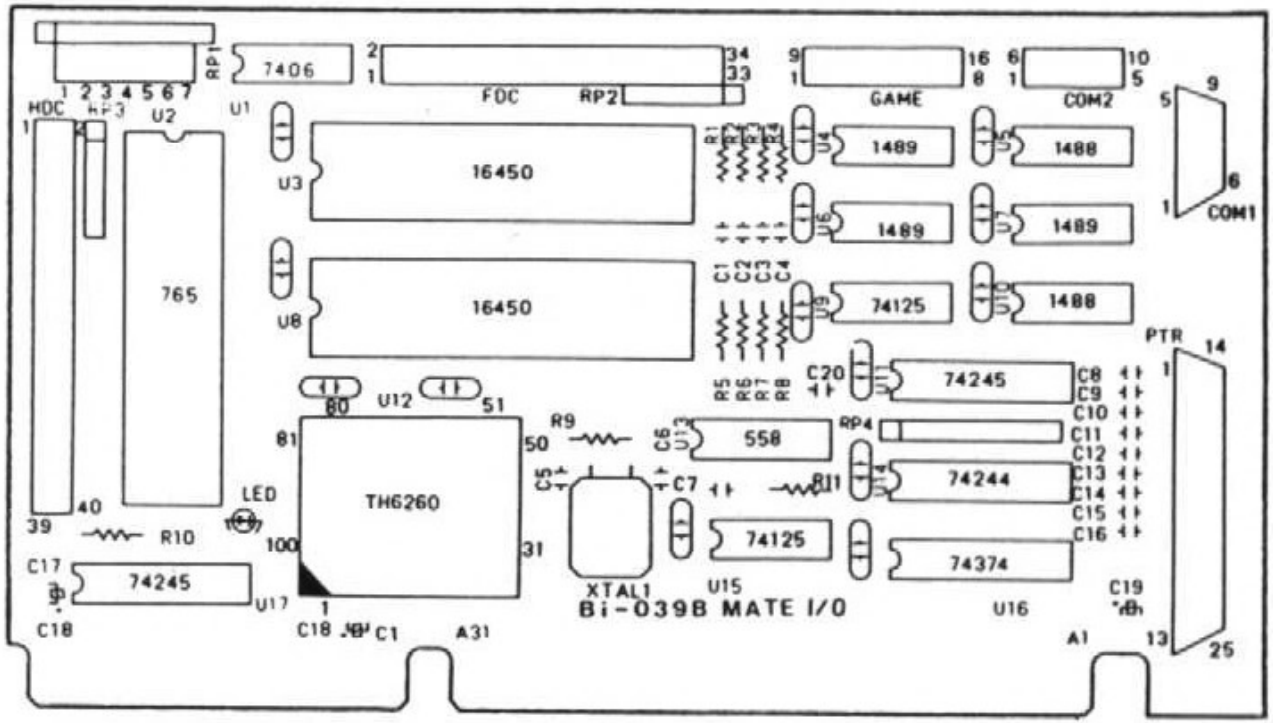

LED: AT BUS HARD DISK LED

2.0 FUNCTIONAL DESCRIPTION

1. Two built-in RS-232 Serial Ports.
2. One built-in Parallel Printer Port.
3. IBM Compatible game port.
4. FLOPPY DISK DRIVE CONTROL UNIT:
   It can control 2 floppy drives, each from 360K to 1.44M, both 5.25" and 3.5".
5. STANDARD AT BUS HDC INTERFACE:
   It can control two 3.5" AT BUS Hard disk drives.

3.0 JUMPER CONFIGURATION

JP1: SECOND SERIAL PORT ENABLE/DISABLE

JP1	COM2 port
ON	Enable
OFF	Disable

JP2: FIRST SERIAL PORT ENABLE/DISABLE

JP2	COM1 port
ON	Enable
OFF	Disable

3.0 FUNCTIONAL DESCRIPTION (CONT.)

JP3: FLOPPY DISK DRIVE CONTROL ENABLE/DISABLE

JP3	FDC
ON	Enable
OFF	Disable

JP4: HARD DISK DRIVE CONTROL ENABLE/DISABLE

JP4	HDC
ON	Enable
OFF	Disable

JP5: GAME PORT ENABLE/DISABLE

JP5	GAME PORT
ON	Enable
OFF	Disable

3.0 FUNCTIONAL DESCRIPTION (CONT.)

JP6,7: PRINTER PORT SETTING

JP6	JP7	GAME PORT
OFF	OFF	Enable
ON	OFF	3BCH
ON	ON	378H
OFF	ON	278H

4.0 HDD/FDD INTERFACE

HARD DISK DRIVE INTERFACE

Pin	Signal	Pin	Signal
1	-Reset	2	Ground
3	D7	4	D8
5	D6	6	D9
7	D5	8	D10
9	D4	10	D11
11	D3	12	D12
13	D2	14	D13
15	D1	16	D14
17	D0	18	D15
19	Ground	20	Unused
21	Unused	22	Ground
23	-IOW	24	Ground
25	-IOR	26	Ground
27	-IOCHRDY	28	ALE
29	Unused	30	Ground
31	IRQBUS	32	-IOCS16
33	A1	34	Unused
35	A0	36	A2
37	-cs0	38	-cs1
39	SLV ACT	40	Ground

FLOPPY DISK DRIVE INTERFACE

Pin	Signal	Pin	Signal
1	Signal Ground	2	-Height Density
3	Reserved	4	Unused
5	Signal Ground	6	Unused
7	Signal Ground	8	-Index
9	Signal Ground	10	-Motor Enable A
11	Signal Ground	12	-Drive Select B
13	Signal Ground	14	-Drive Select A
15	Signal Ground	16	-Motor Enable B
17	Signal Ground	18	-Direction
19	Signal Ground	20	-Step Pulse
21	Signal Ground	22	-Write Data
23	Signal Ground	24	-Write Enable
25	Signal Ground	26	-Track 0
27	Signal Ground	28	-Write Protect
29	Signal Ground	30	-Read Data
31	Signal Ground	32	-Select Head 1
33	Signal Ground	34	-Diskette Change

BI-039B MATE-I/O 2SPG/2FDC/AHDC CARD

5.0 PORTS PINS OUT

SERIAL PORT (COM1, COM2)

Pin	Signal	Pin	Signal
1	Carrier Detect	6	Data Set Ready
2	Received Data	7	Request to Send
3	Transmitted Data	8	Clear to Send
4	Data Terminal Ready	9	Ring Indicator
5	Signal Ground	10	

GAME PORT

Pin	Signal	Pin	Signal
1	+5V	1	+5V
2	D4	2	D6
3	D0	3	D2
4	Ground	4	Ground
5	Ground	5	D3
6	D1	6	D7
7	D5	7	+5V
8	+5V	8	Ground

BI-039B MATE-I/O 2SPG/2FDC/AHDC CARD

PARALLEL PRINTER PORT

Pin	Signal	Pin	Signal
1	-STORE	14	-AUTO FEED XT
2	D0	15	-ERROR
3	D1	16	-INIT
4	D2	17	-SLCT IN
5	D3	18	Ground
6	D4	19	Ground
7	D5	20	Ground
8	D6	21	Ground
9	D7	22	Ground
10	-ACK	23	Ground
11	BUSY	24	Ground
12	PE	25	Ground
13	SLCT		