BEST DATA PRODUCTS, INC.
SMART ONE 336VF, SMART ONE 336SP

Card Type	Modem (asynchronous)
Chipset	Unidentified
I/O Options	Voice, speakerphone (Smart One 336SP only), microphone in, line in, speaker out
Maximum Data Rate	33.6Kbps
Maximum Fax Rate	14.4Kbps
Data Bus	16-bit ISA
Fax Class	Class I & II
Data Modulation	Bell 103A/212A ITU-T V.21, V.22, V.22bis, V.23, V.32, V.32bis, V.34 Rockwell V.FC
Fax Modulation	ITU-T V.17, V.21CH2, V.27ter, V.29
Error Correction/Compression	MNP5, MNP10EC, V.42, V.42bis

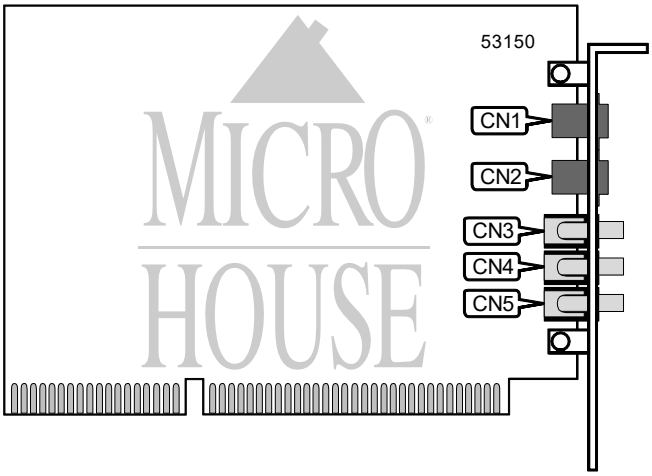

CONNECTIONS			
Function	**Label**	**Function**	**Label**
Telephone line out	CN1	Music-on-hold line in	CN4
Telephone line in	CN2	Microphone in	CN5
Speaker out	CN3		

SUPPORTED STANDARD COMMANDS
Basic AT Commands
+++, ‘comma’, A/
A, B, D, E, H, L, M, N, O, P, Q, T, V, W, X, Y, Z
&C, &D, &F, &G, &K, &Q, &R, &S, &T, &V, &W, &X, &Y, &Z
Extended AT Commands
\A, \B, \G, \K, \N
%C, %E, %L, %Q
Special AT Commands
#CID, :E, *H, -K, -Q, @M, +MS
S-Registers
S0, S1, S2, S3, S4, S5, S6, S7, S8, S9, S10, S11, S12, S14, S16, S18, S21, S22, S23, S24, S25, S26
S28, S29, S30, S31, S32, S33, S36, S38, S39, S40, S41, S46, S48, S82, S86, S91, S92, S95
Note: See MHI documentation for complete information.

Continued on next page. . .

. . . continued from previous page

UNIDENTIFIED COMMANDS	
Command	**Default**
S37	0
S201	Unidentified

Proprietary AT Command Set

DISPLAY INFORMATION	
Type:	Immediate
Format:	AT [cmds] I*n* [cmds]
Description:	Displays information requested about the modem.
Command	**Function**
I0	Displays product identification code.
I1	Displays ROM checksum.
I2	Tests and reports ROM checksum.
I3	Displays firmware model, revision, and interface.
I4	Displays modem model number.
I5	Displays country code.
I6	Displays data pump model and revision.
I7	Displays the DAA code.

See BEST DATA PRODUCTS, INC. SMART ONE 2834F for a full command summary.