UNIDENTIFIED
SNB-C037

Q4/92

Data bus:	16-bit, ISA
Size:	Half-length, full-height card
Hard drives supported:	Two IDE Interface (AT) drives
Floppy drives supported:	Two 360KB, 720KB, 1.2MB, or 1.44MB

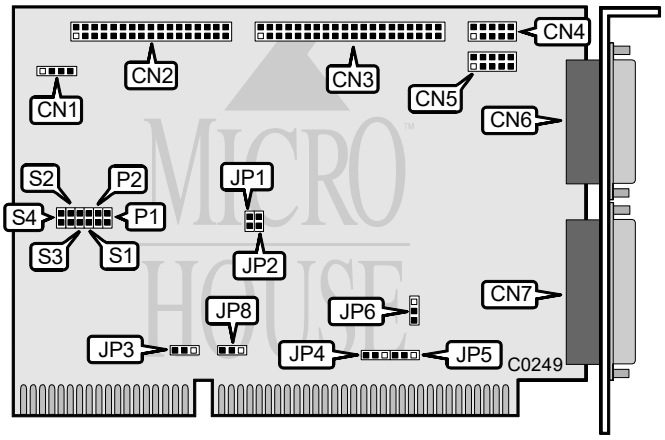

CONNECTIONS	
Function	Location
4-pin connector-drive active LED	CN1
34-pin control cable connector-floppy drive	CN2
40-pin IDE Interface (AT) connector	CN3
9-pin serial port 1 (COM1/3/4)-internal	CN4
9-pin serial port 2 (COM2/3/4)-internal	CN5
15-pin game port-external	CN6
25-pin parallel port-external	CN7

Continued on next page . . .

Copyright © 1991, 1992, 1993 by Micro House Int'l (800) 926-8299. Research Dept. (303) 443-389.

UNIDENTIFIED
SNB-C037

. . . continued from previous page

USER CONFIGURABLE SETTINGS		
Function	Location	Setting
í Floppy drive enabled	JP1	open
Floppy drive disabled	JP1	closed
í Hard drive enabled	JP2	open
Hard drive disabled	JP2	closed
í IRQ14 enabled without Active control	JP3	pins 2 & 3 closed
IRQ14 enabled with Active control	JP3	pins 1 & 2 closed
í Serial Port 1 (CN4) is set to IRQ4 (COM1)	JP4	pins 2 & 3 closed
Serial Port 1 (CN4) is set to IRQ3 (COM4)	JP4	pins 1 & 2 closed
í Serial Port 2 (CN5) is set to IRQ3 (COM2/4)	JP5	pins 1 & 2 closed
Serial Port 2 (CN5) is set to IRQ4 (COM3)	JP5	pins 2 & 3 closed
í Parallel Port (CN7) is set to IRQ7 (LPT2)	JP6	pins 1 & 2 closed
Parallel Port (CN7) is set to IRQ5 (LPT3)	JP6	pins 2 & 3 closed
í 16-bit data transfer with buffer output	JP8	pins 1 & 2 closed
16-bit data transfer without buffer output	JP8	pins 2 & 3 closed

SERIAL PORT 2 (CN5) CONFIGURATION		
COM	S2	S4
í COM2 (2F8-2FF)	closed	open
COM3 (3E8-3EF)	closed	closed
COM4 (2E8-2EF)	open	closed
Disabled	open	open

SERIAL PORT 1 (CN4) CONFIGURATION		
COM	P2	S3
í COM1 (3F8-3FF)	closed	open
COM3 (3E8-3EF)	open	closed
COM4 (2E8-2EF)	closed	closed
Disabled	open	open

PARALLEL PORT (CN7) CONFIGURATION		
LPT	P1	S1
í LPT2 (378-37F)	closed	open
LPT3 (278-27F)	open	closed
Disabled	open	open

Copyright © 1991, 1992, 1993 by Micro House Int'l (800) 926-8299. BBS (303) 443-9957.