IBM VGA®-COMPATIBLE VIDEO GRAPHICS CONTROLLER

FEATURES

- Single-chip VGA video graphics device that is completely compatible in the following systems:
  - –IBM PC/AT-compatible
  - –IBM PC/XT-compatible
  - –IBM PS/2-compatible
- Fully compatible with IBM VGA in all modes
- Fully compatible with IBM basic input/output system (BIOS)
- Provides 800 x 600 element high-resolution graphics with 256 colors
- Flicker-free operation in all video modes
- Hardware mouse cursor feature

DESCRIPTION

The VL82C037/OTI-037 VGA-compatible Video Graphics Controller is a single-chip, high-integration, high resolution graphics device intended for use in IBM PS/2® Model 30-compatible systems as well PC/AT- and PC/XT-compatible systems. It provides high resolution graphics of 800 x 600 elements with 256 colors.

The VL82C037/OTI-037 is fully compatible with IBM VGA in all modes, as well as being fully compatible with Hercules graphics. VL82C037/OTI-037 compatibility also extends to IBM EGA BIOS® (basic input/output system), CGA and MDA. The VL82C037/OTI-037 automatically switches among the CGA, MDA, and Hercules graphic protocols.

The VLSI/OTI VGA-compatible device allows split-screen operattion with independent scrolling and panning. It is also flicker-free in all modes. It supports an external digital-to-analog lookup table as well as additional video memory for high resolution operation with 256 colors. The VL82C037 is available from both VLSI Technology Inc. and Oak Technology, Inc. in an industry-standard plastic 100 pin flat pack.

SYSTEM BLOCK DIAGRAM

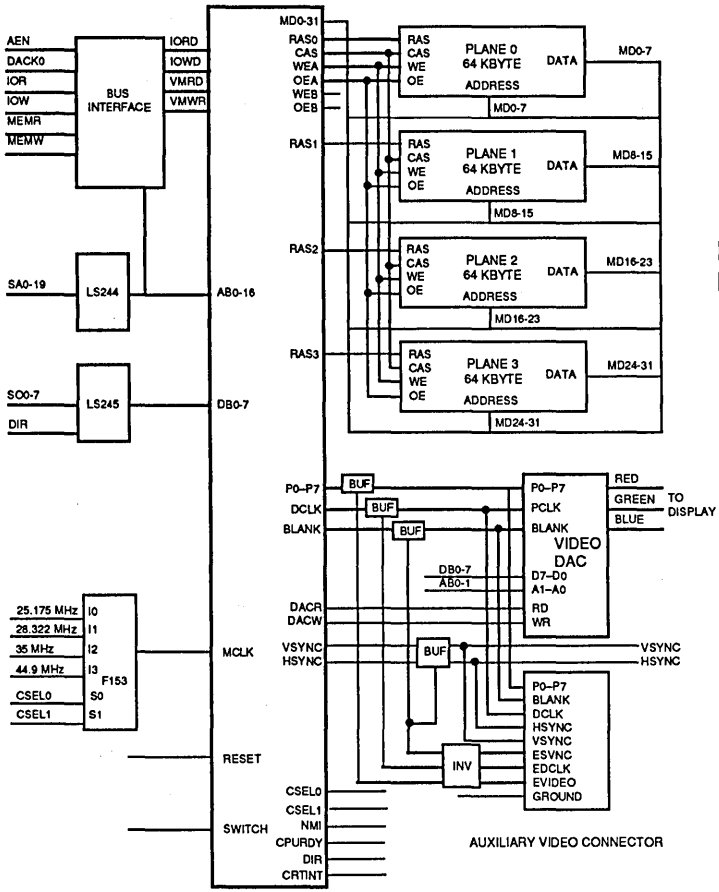

PLEASE CONSULT DATA SHEET FOR DETAILED INFORMATION

ORDER INFORMATION

Part Number	Package
VL82C037-FC	Plastic Flat Pack

Notes: Operating temperature range is 0°C to +70°C.

IBM PS/2®, IBM VGA®, and IBM BIOS® are registered trademarks of IBM Corp.