W 24 1993

MUSIC SEMICONDUCTORS

MU9C4870, 4870V DIRECT COLOR GRAPHICS PALETTE

PRODUCT INFORMATION

DISTINCTIVE CHARACTERISTICS

- **Combination Look-up table and triple Video DAC**
- **Adds Direct Color capability to standard VGA controllers**
- **Direct Color mode displays up to 64K colors with four selectable mappings, including TARGA™ and XGA™**
- **Displays 256 colors from a palette of 256K colors**
- **Pixel-by-pixel mix of 256 Look-up Table or 32K Direct colors**
- **Compatible with Tseng Labs ET4000 Graphics Controller High Color mode**
- **Directly drives single- or double-terminated 75-ohm transmission line**
- **VGA, Super VGA, VESA, TIGA™, and 8514/A compatible with enhanced features**
- **Two reduced-power Sleep modes**
- **Internal/external voltage reference (MU9C4870V) or external current reference (MU9C4870)**
- **Monitor Sense comparators detect monitor connection**
- **Setup and Sync for video monitor compatibility**
- **Asynchronous Microprocessor Interface**
- **Pixel Replicate™ suppresses display noise when Look-up Table or Mask Register accessed during active display time**
- **Industry-standard 28-pin PDIP (MU9C4870) and 44-pin PLDCC packages (MU9C4870 and MU9C4870V)**
- **Available in 125-, 110-, 80-, and 66-MHz Pixel Rates**
- **High-performance, TTL-compatible CMOS for low power**

GENERAL DESCRIPTION

The MU9C4870 and MU9C4870V monolithic Graphics Color Palettes include a 256-word by 18-bit Look-up table, Direct Color bypass, three six-bit Video DACs, Monitor Sense comparators, and two Sleep modes. The Look-up table accepts up to eight bits per pixel from a frame buffer and performs a translation into three six-bit values for conversion into Red, Green, and Blue analog signals. Each of the Video DACs can directly drive a double-terminated 75-ohm transmission line. The MU9C4870 sets the DAC output current with an external current reference. The MU9C4870V sets the DAC output current by using an internal or external voltage reference.

The MU9C4870 and MU9C4870V are fully compatible with VGA, Super-VGA, VESA, TIGA™ and 8514/A industry standards while providing many enhanced features. Direct Color operation bypasses the Look-up table to provide 64K (16-bit) or 32K (15-bit) displayable colors in four mappings. Two Direct Color clocking schemes are available; one scheme is fully compatible with the Tseng Labs ET4000 High Color mode, and the other allows Direct Color displays with any VGA controller's 256-color modes. Simultaneous display of Pseudo-color and Direct Color data is supported. Sync pulses and a programmable pedestal are available on all three outputs. Monitor Sense comparators permit the detection of color, monochrome, or no monitor connection. Sleep mode reduces power consumption in battery-powered applications. These devices also incorporate a proprietary Pixel Replicate™ feature that allows Look-up table read and write operations to occur during the active portion of the display.

The MU9C4870 and MU9C4870V are compatible with industry standard devices providing Direct Color capability, including key-sequence access. They are available in industry standard 28-pin PDIP (MU9C4870 only) and 44-pin PLDCC packages, and permit the direct upgrade of systems using many different VGA controllers. They support screen resolutions up to 1280 by 1024 with the color capability necessary for high-performance Desktop and Notebook Personal Computer and Desktop Publishing systems.

BLOCK DIAGRAM

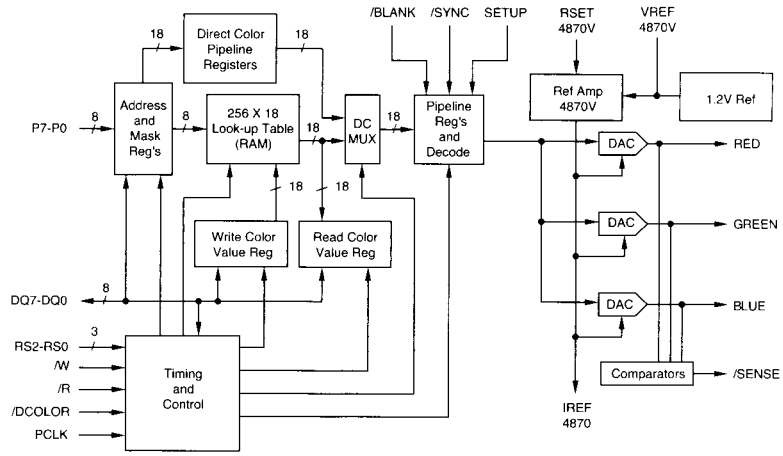

The phrase "MUSIC Semiconductors" and the MUSIC logo are registered trademarks of MUSIC Semiconductors. Pixel Replicate and MUSIC are trademarks of MUSIC Semiconductors. TIGA is a trademark of Texas Instruments. TARGA is a trademark of Truevision, Inc. XGA is a trademark of IBM.

April 23, 1993, Rev. 1

MU9C4870/V

PINOUT DIAGRAMS

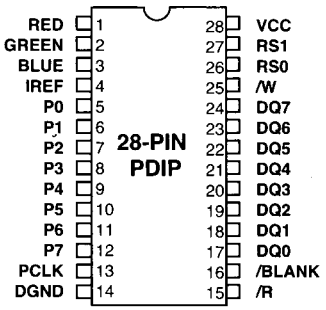

MU9C4870

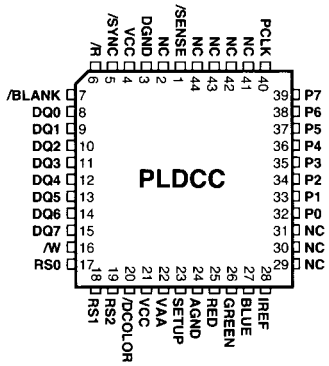

MU9C4870

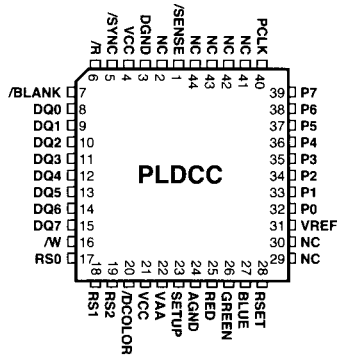

MU9C4870V

ORDERING INFORMATION

PART NUMBER	SPEED	REFERENCE	PACKAGE	TEMPERATURE RANGE
MU9C4870-YYPC		CURRENT	28-PIN PDIP	0-70° C
MU9C4870-YYDC		CURRENT	44-PIN PLDCC	0-70° C
MU9C4870V-YYDC		VOLTAGE	44-PIN PLDCC	0-70° C
YY=66	66 MHz			
YY=80	80 MHz			
YY=11	110 MHz			
YY=12	125 MHz			

MUSIC Semiconductors®

USA Headquarters
MUSIC Semiconductors
1150 Academy Park Loop, Suite 202
Colorado Springs, CO 80910
USA
Tel: (1) 719-570-1550
Fax: (1) 719-570-1555
Tel within USA: (1) 800-933-1550

European Headquarters
MUSIC Semiconductors
Torenstraat 28
PO Box 184
6470 ED Eygelshoven
The Netherlands
Tel: +31-45-467878
Fax: +31-45-467822

Far East Headquarters
MUSIC Semiconductors
Km. 22, East Service Road
South Superhighway
Cupang, Muntinlupa, Metro Manila
Philippines
Tel: +63-2-834-2156
Fax: +63-2-833-3959

MUSIC Semiconductors agent or distributor:

MUSIC Semiconductors reserves the right to make changes to its products and specifications at any time in order to improve on performance, manufacturability, or reliability. Information furnished by MUSIC is believed to be accurate, but no responsibility is assumed by MUSIC Semiconductors for the use of said information, nor for any infringements of patents or of other third-party rights which may result from said use. No license is granted by implication or otherwise under any patent or patent rights of any MUSIC company.

© Copyright 1993, MUSIC Semiconductors

037755