DAVICOM Semiconductor, Inc.

DM9010B

10/100 Mbps Single Chip Ethernet Controller With General Processor Interface

DATA SHEET

Preliminary
Version: DM9010B-DS-P01
September 5, 2007

Content

1. GENERAL DESCRIPTION 7
2. BLOCK DIAGRAM 7
3. FEATURES 8
4. PIN CONFIGURATION 9
4.1 PIN CONFIGURATION I: WITH MII INTERFACE 9
4.2 PIN CONFIGURATION II: WITH 32-BIT DATA BUS 10
5. PIN DESCRIPTION 11
5.1 MII INTERFACE 11
5.2 PROCESSOR INTERFACE 11
5.3 EEPROM INTERFACE 13
5.4 CLOCK INTERFACE 13
5.5 LED INTERFACE 13
5.6 10/100 PHY/FIBER 14
5.7 MISCELLANEOUS 14
5.8 POWER PINS 15
5.9 STRAP PINS TABLE 15
6. VENDOR CONTROL AND STATUS REGISTER SET 16
6.1 NETWORK CONTROL REGISTER (00H) 18
6.2 NETWORK STATUS REGISTER (01H) 18
6.3 TX CONTROL REGISTER (02H) 18
6.4 TX STATUS REGISTER I (03H) FOR PACKET INDEX I 19
6.5 TX STATUS REGISTER II (04H) FOR PACKET INDEX I I 19
6.6 RX CONTROL REGISTER (05H) 19
6.7 RX STATUS REGISTER (06H) 20
6.8 RECEIVE OVERFLOW COUNTER REGISTER (07H) 20
6.9 BACK PRESSURE THRESHOLD REGISTER (08H) 21
6.10 FLOW CONTROL THRESHOLD REGISTER (09H) 21
6.11 RX/TX FLOW CONTROL REGISTER (0AH) 21
6.12 EEPROM & PHY CONTROL REGISTER (0BH) 22

6.13 EEPROM & PHY ADDRESS REGISTER (0CH) 22
6.14 EEPROM & PHY DATA REGISTER (EE_PHY_L：0DH EE_PHY_H：0EH) 22
6.15 WAKE UP CONTROL REGISTER (0FH) 22
6.16 PHYSICAL ADDRESS REGISTER (10H~15H) 23
6.17 MULTICAST ADDRESS REGISTER (16H~1DH) 23
6.18 GENERAL PURPOSE CONTROL REGISTER (1EH) 23
6.19 GENERAL PURPOSE REGISTER (1FH) 23
6.20 TX SRAM READ POINTER ADDRESS REGISTER (22H~23H) 24
6.21 RX SRAM WRITE POINTER ADDRESS REGISTER (24H~25H) 24
6.22 VENDOR ID REGISTER (28H~29H) 24
6.23 PRODUCT ID REGISTER (2AH~2BH) 24
6.24 CHIP REVISION REGISTER (2CH) 24
6.25 TRANSMIT CONTROL REGISTER 2 (2DH) 24
6.26 OPERATION TEST CONTROL REGISTER (2EH) 25
6.27 SPECIAL MODE CONTROL REGISTER (2FH) 25
6.28 EARLY TRANSMIT CONTROL/STATUS REGISTER (30H) 25
6.29 TRANSMIT CHECK SUM CONTROL REGISTER (31H) 26
6.30 RECEIVE CHECK SUM CONTROL STATUS REGISTER (32H) 26
6.31 EXTERNAL PHYCEIVER ADDRESS REGISTER (33H) 26
6.32 GENERAL PURPOSE CONTROL REGISTER 2 (34H) 27
6.33 GENERAL PURPOSE REGISTER 2 (35H) 27
6.34 GENERAL PURPOSE CONTROL REGISTER 3 (36H) 27
6.35 GENERAL PURPOSE REGISTER 3 (37H) 27
6.36 PROCESSOR BUS CONTROL REGISTER (38H) 27
6.37 INT PIN CONTROL REGISTER (39H) 28
6.38 MONITOR REGISTER 1 (40H) 28
6.39 MONITOR REGISTER 2 (41H) 28
6.40 SYSTEM CLOCK TURN ON CONTROL REGISTER (50H) 28
6.41 RESUME SYSTEM CLOCK CONTROL REGISTER (51H) 28
6.42 MEMORY DATA PRE-FETCH READ COMMAND WITHOUT ADDRESS INCREMENT REGISTER (F0H) 28
6.43 MEMORY DATA READ COMMAND WITHOUT ADDRESS INCREMENT REGISTER (F1H) 29
6.44 MEMORY DATA READ COMMAND WITH ADDRESS INCREMENT REGISTER (F2H) 29
6.45 MEMORY DATA READ ADDRESS REGISTER (F4H~F5H) 29
6.46 MEMORY DATA WRITE COMMAND WITHOUT ADDRESS INCREMENT REGISTER (F6H) 29

6.47 MEMORY DATA WRITE COMMAND WITH ADDRESS INCREMENT REGISTER (F8H) 29
6.48 MEMORY DATA WRITE ADDRESS REGISTER (FAH~FBH) 29
6.49 TX PACKET LENGTH REGISTER (FCH~FDH) 29
6.50 INTERRUPT STATUS REGISTER (FEH) 30
6.51 INTERRUPT MASK REGISTER (FFH) 30

7. EEPROM FORMAT 31

8. MII REGISTER DESCRIPTION 32

8.1 BASIC MODE CONTROL REGISTER (BMCR) - 00 33
8.2 BASIC MODE STATUS REGISTER (BMSR) - 01 34
8.3 PHY ID IDENTIFIER REGISTER #1 (PHYID1) - 02 35
8.4 PHY ID IDENTIFIER REGISTER #2 (PHYID2) - 03 35
8.5 AUTO-NEGOTIATION ADVERTISEMENT REGISTER (ANAR) - 04 35
8.6 AUTO-NEGOTIATION LINK PARTNER ABILITY REGISTER (ANLPAR) – 05 36
8.7 AUTO-NEGOTIATION EXPANSION REGISTER (ANER) - 06 37
8.8 DAVICOM SPECIFIED CONFIGURATION REGISTER (DSCR) - 16 38
8.9 DAVICOM SPECIFIED CONFIGURATION AND STATUS REGISTER (DSCSR) - 17 39
8.10 10BASE-T CONFIGURATION/STATUS (10BTCSR) - 18 40
8.11 POWER DOWN CONTROL REGISTER (PWDOR) - 19 41
8.12 (SPECIFIED CONFIG) REGISTER – 20 41

9. FUNCTIONAL DESCRIPTION 42

9.1 HOST INTERFACE 42
9.2 DIRECT MEMORY ACCESS CONTROL 42
9.3 PACKET TRANSMISSION 42
9.4 PACKET RECEPTION 42
9.5 100BASE-TX OPERATION 43
9.5.1 4B5B Encoder 43
9.5.2 Scrambler 43
9.5.3 Parallel to Serial Converter 43
9.5.4 NRZ to NRZI Encoder 43
9.5.5 MLT-3 Converter 43
9.5.6 MLT-3 Driver 43
9.5.7 4B5B Code Group 44

9.6 100BASE-TX RECEIVER **45**
9.6.1 Signal Detect *45*
9.6.2 Adaptive Equalization *45*
9.6.3 MLT-3 to NRZI Decoder *45*
9.6.4 Clock Recovery Module *45*
9.6.5 NRZI to NRZ *45*
9.6.6 Serial to Parallel *45*
9.6.7 Descrambler *45*
9.6.8 Code Group Alignment *46*
9.6.9 4B5B Decoder *46*
9.7 10BASE-T OPERATION **46**
9.8 COLLISION DETECTION **46**
9.9 CARRIER SENSE **46**
9.10 AUTO-NEGOTIATION **46**
9.11 POWER REDUCED MODE **47**
9.11.1 Power Down Mode *47*
9.11.2 Reduced Transmit Power Mode *47*
10. DC AND AC ELECTRICAL CHARACTERISTICS **48**
10.1 ABSOLUTE MAXIMUM RATINGS **48**
10.1.1 OPERATING CONDITIONS **48**
10.2 DC ELECTRICAL CHARACTERISTICS (VDD = 3.3V) **48**
10.3 AC ELECTRICAL CHARACTERISTICS & TIMING WAVEFORMS **49**
10.3.1 TP Interface *49*
10.3.2 Oscillator/Crystal Timing *49*
10.3.3 Power On Reset Timing *49*
10.3.4 Processor I/O Read Timing *50*
10.3.5 Processor I/O Write Timing *51*
10.3.6 External MII Interface Transmit Timing *52*
10.3.7 External MII Interface Receive Timing *52*
10.3.8 MII Management Interface Timing *53*
10.3.9 EEPROM Interface Timing *53*
11. APPLICATION NOTES **54**

11.1 NETWORK INTERFACE SIGNAL ROUTING 54
11.2 10BASE-T/100BASE-TX HP AUTO-MDIX APPLICATION 54
11.3 10BASE-T/100BASE-TX (NON HP AUTO-MDIX TRANSFORMER APPLICATION) 55
11.4 POWER DECOUPLING CAPACITORS 56
11.5 GROUND PLANE LAYOUT 57
11.6 POWER PLANE PARTITIONING 58
11.7 MAGNETICS SELECTION GUIDE 59
11.8 CRYSTAL SELECTION GUIDE 59
11.9 APPLICATION OF REVERSE MII 60
12. PACKAGE INFORMATION 61
13. ORDERING INFORMATION 62

1. GENERAL DESCRIPTION

The DM9010B is a fully integrated and cost-effective single chip Fast Ethernet MAC controller with a general processor interface, a 10/100M PHY and 16K Byte SRAM. It is designed with low power and high performance process that support 3.3V with 5V tolerance.

The DM9010B also provides a MII interface to connect HPNA device or other transceivers that support MII interface.

The DM9010B supports 8-bit, 16-bit and 32-bit uP interfaces to internal memory accesses for different processors. The PHY of the DM9010B can interface to the UTP3, 4, 5 in 10Base-T and UTP5 in 100Base-TX. It is fully compliant with the IEEE 802.3u Spec. Its auto-negotiation function will automatically configure the DM9010B to take the maximum advantage of its abilities. The DM9010B also supports IEEE 802.3x full- duplex flow control. This programming of the DM9010B is very simple, so user can port the software drivers to any system easily.

2. BLOCK DIAGRAM

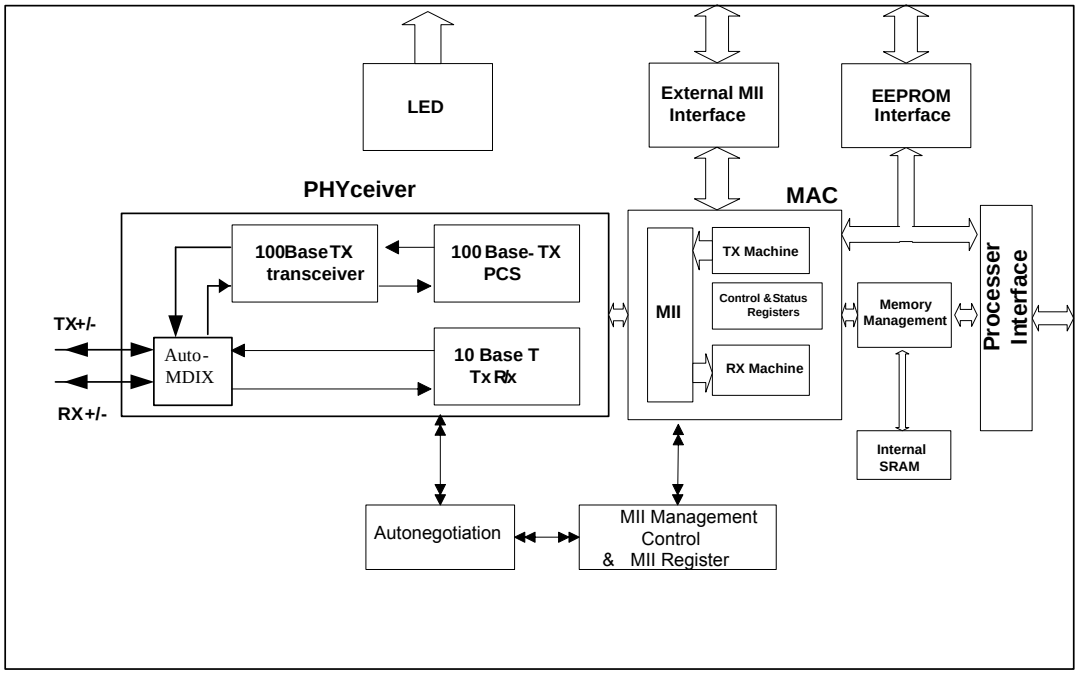

3. FEATURES

- 100-pin LQFP.
- Supports processor interface: Byte/word/Dword of I/O command to internal memory data operation
- Integrated 10/100M transceiver with HP Auto-MDIX
- Supports MII and reverses MII interface
- Supports back pressure mode for half-duplex mode flow control
- IEEE802.3x flow control for full-duplex mode
- Supports wakeup frame, link status change and magic packet events for remote wake up
- Integrated 16K Byte SRAM
- Build in 3.3V to 1.8V regulator
- Supports early Transmit
- Supports IP/TCP/UDP checksum generation and checking
- Supports automatically load vendor ID and product ID from EEPROM
- Supports 7 or 23 GPIO pins
- Optional EEPROM configuration
- Very low power consumption mode:
  - Power reduced mode (cable detection)
  - Power down mode
  - Selectable TX drivers for 1:1 or 1.25:1 transformers for additional power reduction.
  - 1: 1 transformers only when HP Auto-MDIX Enable.
- Compatible with 3.3V and 5.0V tolerant I/O

4. PIN CONFIGURATION

4.1 Pin Configuration I: with MII Interface

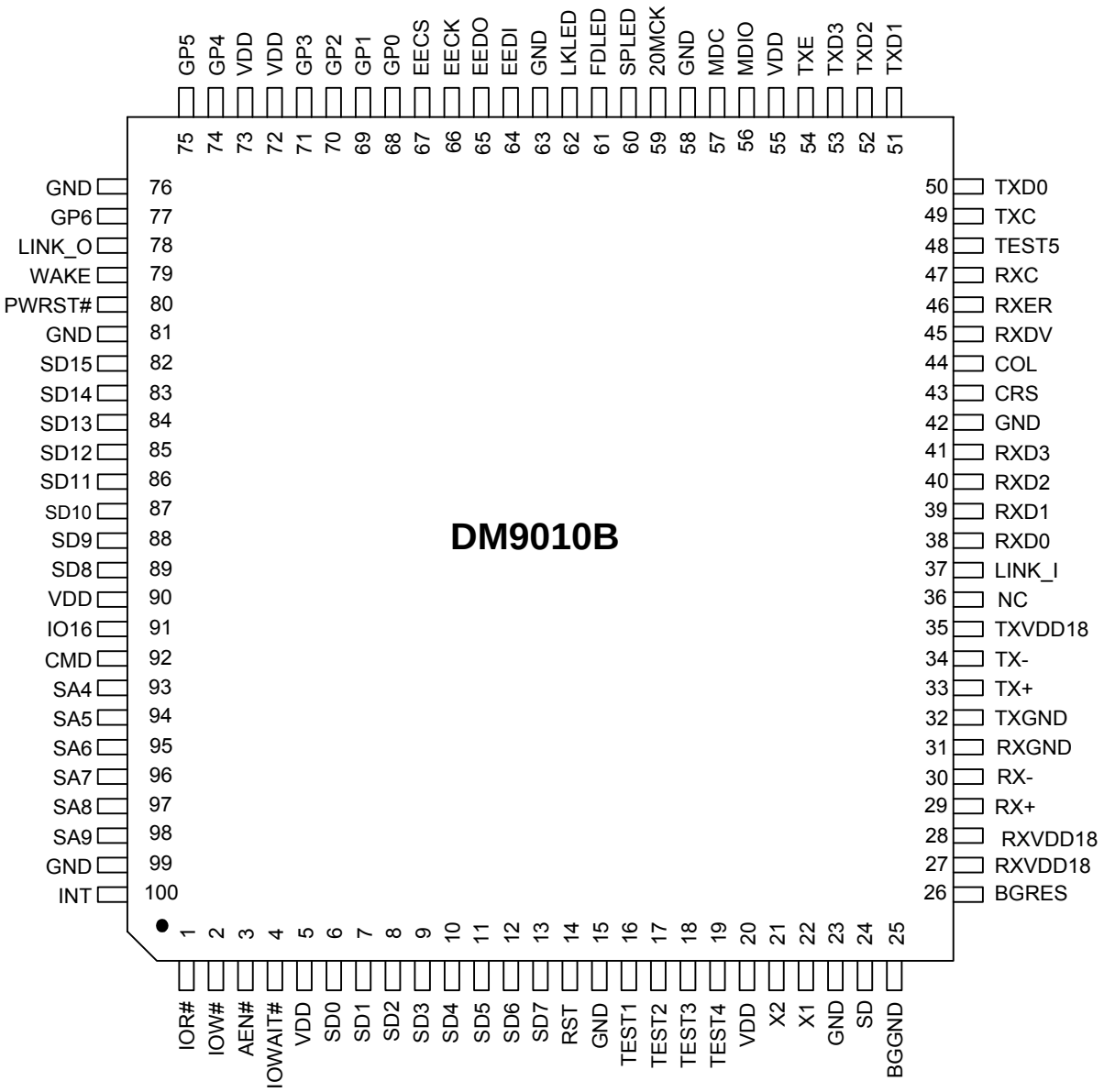

4.2 Pin Configuration II: with 32-Bit Data Bus

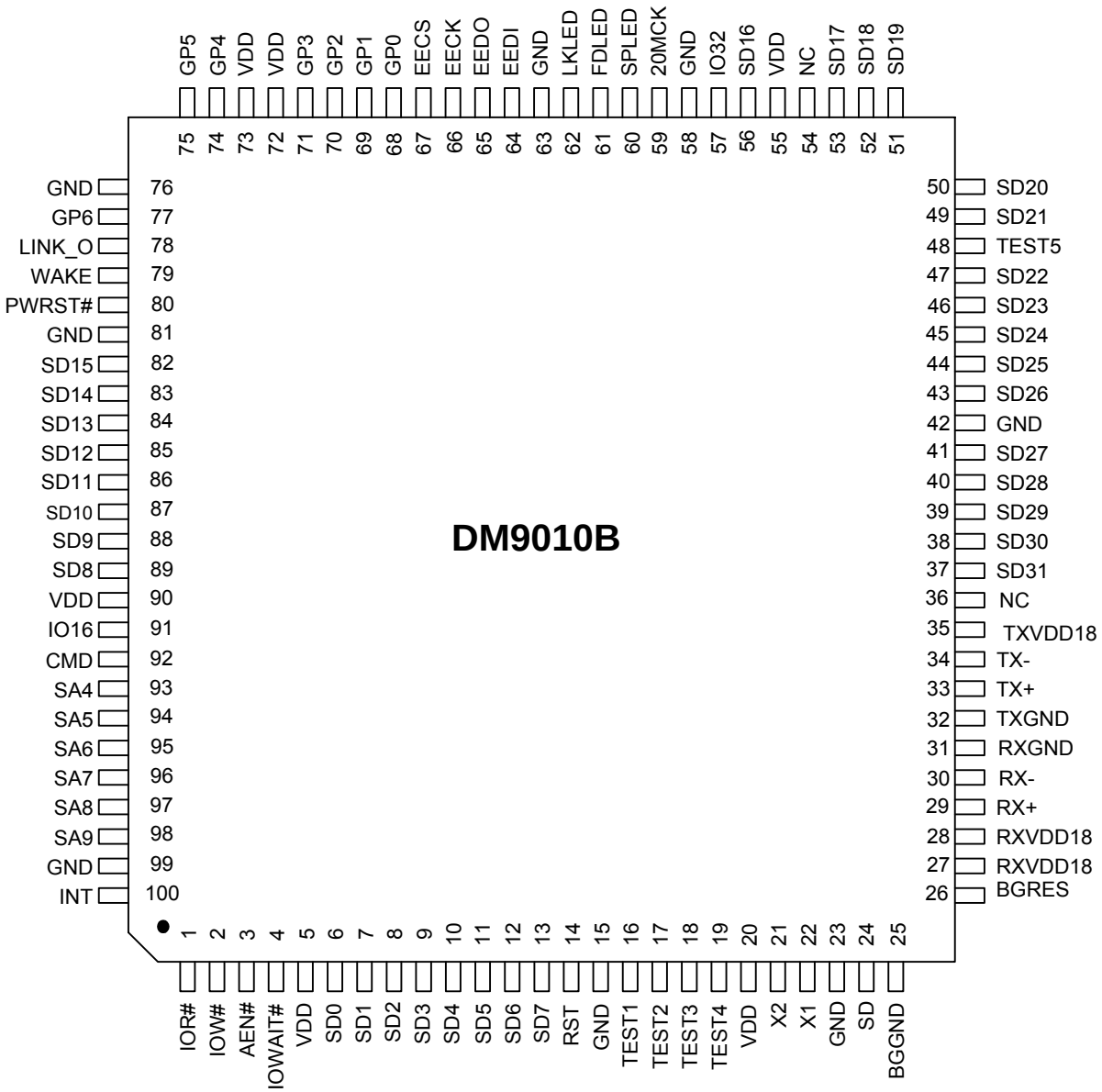

5. PIN DESCRIPTION

I= Input, O=Output, I/O= Input/Output, O/D= Open Drain, P= Power,

LI= reset Latch Input, #= asserted low, PD=internal pull-low about 60K ohm, PU=internal pull-high

5.1 MII Interface

Pin No.	Pin Name	I/O	Description
37	LINK_I	I,PD	External MII device link status
41,40,39, 38	RXD [3:0]	I,PD	External MII Receive Data 4-bit nibble data input (synchronous to RXCLK) when in 10/100 Mbps. MII mode
43	CRS	I/O,PD	External MII Carrier Sense Active high to indicate the pressure of carrier, due to receive or transmit activities in 10 Base-T or 100 Base-TX modes. This pin is output in reverse MII interface.
44	COL	I/O,PD	External MII Collision Detect. This pin is output in reverse MII interface.
45	RX_DV	I,PD	External MII Receive Data Valid
46	RX_ER	I,PD	External MII Receive Error
47	RX_CLK	I,PD	External MII Receive Clock
49	TX_CLK	I/O,PD	External MII Transmit Clock. This pin in output in MII interfaces.
53,52,51, 50	TXD [3:0]	O,PD	External MII Transmit Data 4-bit nibble data outputs (synchronous to the TX_CLK) when in 10/100Mbps nibble mode TXD [2:0] is also used as the strap pins of IO base address. IO base = (strap pin value of TXD [2:0]) * 10H + 300H
54	TX_ EN	O,PD	External MII Transmit Enable
56	MDIO	I/O,PD	MII Serial Management Data
57	MDC	O,PD	MII Serial Management Data Clock This pin is also used as the strap pin of the polarity of the INT pin When the MDC pin is pulled high, the INT pin is low active; otherwise the INT pin is high active

5.2 Processor Interface

1	IOR#	I,PD	Processor Read Command This pin is low active at default; its polarity can be modified by EEPROM setting. See the EEPROM content description for detail
2	IOW#	I,PD	Processor Write Command This pin is low active at default; its polarity can be modified by EEPROM setting. See the EEPROM content description for detail
3	AEN	I,PD	Address Enable A low active signal used to select the DM9010B.
4	IOWAIT	O,PD	Processor Command Ready When a command is issued before last command is completed, the IOWAIT will be pulled low to indicate the current command is waited The polarity and output type can be updated by EEPROM. The default is Open-Drain output and low active.

14	RST	I	Hardware Reset Command, active high to reset the DM9010B
6,7,8,9,10, 11,12,13, 89,88,87, 86,85,84, 83,82	SD0~15	I/O,PD	Processor Data Bus bit 0~15
93,94,95, 96,97,98	SA4~9	I,PD	Address Bus 4~9 These pins are used to select the DM9010B. When SA9 and SA8 are in high states, and SA7 and AEN are in low states, and SA6~4 are matched with strap pins TXD2~0, the DM9010B is selected.
92	CMD	I,PD	Command Type When high, the access of this command cycle is DATA port When low, the access of this command cycle is INDEX port
91	IO16	O	Word Command Indication When the access of internal memory is word or Dword width, this pin will be asserted This pin is low active at default; its polarity can be modified by EEPROM setting. See the EEPROM content description for detail
100	INT	O,PD	Interrupt Request This pin is high active at default, its polarity can be modified by EEPROM setting or strap pin MDC. See the EEPROM content description for detail
56,53,52, 51,50,49, 47,46,45, 44,43,41, 40,39,38 37	SD16~31 (in double word mode)	I/O,PD	Processor Data Bus bit 16~31 These pins are used as data bus bits 16~31 when the DM9010B is set to double word mode (the straps pin EEDO is pulled high and WAKE is not pull-high)
57	IO32 (in double word mode)	O,PD	Double Word Command Indication This pins is used as the double word command indication when the DM9010B is set to double data word mode, and this pin will be asserted when the access of internal memory is double word width This pin is low active at default; its polarity can be modified by EEPROM setting. See the EEPROM content description for detail When the IO32 pin is pulled high, the INT pin is low active; otherwise the INT pin is high active

5.3 EEPROM Interface

64	EEDI	I	Data from EEPROM
65	EEDO	O,PD	Data to EEPROM This pin is also used as a strap pin. It combines with strap pin WOL, and it can set the data width of the internal memory access The decoder table is the following, where the logic 1 means the strap pin is pulled high WAKE EEDO data width 0 0 16-bit 0 1 32-bit 1 0 8-bit 1 1 reserved
66	EECK	O,PD	Clock to EEPROM
67	EECS	O,PD	Chip Select to EEPROM This pin is also used as a strap pin to define the LED modes. When it is pulled high, the LED mode is mode 1; Otherwise it is mode 0

Note: The pins EECS, EECK and EEDO are all have a pulled down resistor about 60 k ohms internally

5.4 Clock Interface

21	X2_25M	O	Crystal 25MHz Out
22	X1_25M	I	Crystal 25MHz In
59	CLK20MO	I/O,PD	20Mhz Clock Output It is used as the clock signal for the external MII device's clock is 20MHz This pin has a pulled down resistor about 60k ohm internally. When pin TEST5 state is high, this pin acts as the system clock.

5.5 LED Interface

60	SPLED	O	Speed LED Its low output indicates that the internal PHY is operated in 100M/S, or it is floating for the 10M mode of the internal PHY
61	FDLED	O	Full-duplex LED In LED mode 1, Its low output indicates that the internal PHY is operated in full-duplex mode, or it is floating for the half-duplex mode of the internal PHY In LED mode 0, Its low output indicates that the internal PHY is operated in 10M mode, or it is floating for the 100M mode of the internal PHY
62	LKLED	O	Link / Active LED In LED mode 1, it is the combined LED of link and carrier sense signal of the internal PHY In LED mode 0, it is the LED of the carrier sense signal of the internal PHY only

5.6 10/100 PHY/Fiber

24	SD	I	Fiber-optic Signal Detect PECL signal, which indicates whether or not the fiber-optic receive pair is receiving valid levels
25	BGGND	P	Band gap Ground, need to connect to AGND.
26	BGRES	I/O	Band gap Pin
27,28	RXVDD18	P	Internal regulator 1.8V output for TP RX
29	RXI+	I/O	TP RX Input
30	RXI-	I/O	TP RX Input
31	RXGND	P	RX Ground
32	TXGND	P	TX Ground
33	TXO+	I/O	TP TX Output
34	TXO-	I/O	TP TX Output
35	TXVDD18	P	Internal regulator 1.8V output for TP TX

5.7 Miscellaneous

16,17,18, 19	TEST1~TEST4	I	Operation Mode Test 1, 2, 3, 4 = (1, 1, 0, 0) in normal application
48	TEST5	I,PD	Internal system clock source 0: use internal 50MHz clock *(Suggestion) 1: use CLK20MO pin
68,69,70, 71, 74,75,77	GP0~6	I/O,PD	General I/O Ports Registers GPCR and GPR can program these pins The GPIO0 is an output mode, and output data high at default is to power down internal PHY and other external MII device GP1~3 defaults are input ports, GP 0, 4~6 force to output ports.
78	LINK_O	O,PD	Cable Link Status Output. Active High This pin is also used as a strap pin to define whether the MII interface is a reversed MII interface (pulled high) or a normal MII interface (not pulled high). This pin has a pulled down resistor about 60k ohm internally.
79	WAKE	O,PD	Issue a wake up signal when wake up event happens This pin has a pulled down resistor about 60k ohm internally.
80	PW_RST#	I	Power on Reset Active low signal to initiate the DM9010B The DM9010B is ready after 5us when this pin deasserted
36	NC	NC	NC

5.8 Power Pins

5,20,55, 72,90,73	DVDD	P	Digital VDD
15,23,42, 58,63,81, 99,76	GND	P	Digital GND

5.9 strap pins table

1: pull-high 1K~10K, 0: floating. (Default)

Pin No.	Pin Name	Description
57	MDC	Polarity of INT 1: INT pin low active; 0: INT pin high active
65	EEDO	DATA Bus Width
79	WAKE	WAKE EEDO data width 0 0 16-bit 0 1 32-bit 1 0 8-bit 1 1 reserved
67	EECS	LED Mode When it is pulled high, the LED mode is mode 1; Otherwise it is mode 0
52,51, 50	TXD[2:0]	IO base address. (not available in 32-bit mode) IO base = (strap pin value of TXD [2:0]) * 10H + 300H
78	LINK_O	Reverse MII 1: Reverse MII mode 0: normal MII mode
53	TXD[3]	External MII mode (not available in 32-bit mode) force to external MII mode , mapping to bit 5 of REG. 2EH and set register NCR Bit7 “1”,
54	TXEN	Disable to load EEPROM after power on reset.
74	GPIO4	PHY Power-Up. 1: PHY is power-up after power-ON 0: PHY is power-down after power-ON
75	GPIO5	Output Type of INT 1: INT pin is Open-Collect 0: INT pin is force output
77	GPIO6	HP Auto-MDIX 0: HP Auto-MDIX turn ON 1: HP Auto-MDIX turn OFF

6. VENDOR CONTROL AND STATUS REGISTER SET

The DM9010B implements several control and status registers, which can be accessed by the host. These CSRs are byte aligned. All CSRs are set to their default values by hardware or software reset unless they are specified

Register	Description	Offset	Default value after reset
NCR	Network Control Register	00H	00H
NSR	Network Status Register	01H	00H
TCR	TX Control Register	02H	00H
TSR I	TX Status Register I	03H	00H
TSR II	TX Status Register II	04H	00H
RCR	RX Control Register	05H	00H
RSR	RX Status Register	06H	00H
ROCR	Receive Overflow Counter Register	07H	00H
BPTR	Back Pressure Threshold Register	08H	37H
FCTR	Flow Control Threshold Register	09H	38H
FCR	RX Flow Control Register	0AH	00H
EPCR	EEPROM & PHY Control Register	0BH	00H
EPAR	EEPROM & PHY Address Register	0CH	40H
EPDRL	EEPROM & PHY Low Byte Data Register	0DH	XXH
EPDRH	EEPROM & PHY High Byte Data Register	0EH	XXH
WCR	Wake Up Control Register	0FH	00H
PAR	Physical Address Register	10H-15H	Determined by EEPROM
MAR	Multicast Address Register	16H-1DH	XXH
GPCR	General Purpose Control Register	1EH	01H
GPR	General Purpose Register	1FH	XXH
TRPAL	TX SRAM Read Pointer Address Low Byte	22H	00H
TRPAH	TX SRAM Read Pointer Address High Byte	23H	00H
RWPAL	RX SRAM Write Pointer Address Low Byte	24H	00H
RWPAH	RX SRAM Write Pointer Address High Byte	25H	0CH
VID	Vendor ID	28H-29H	0A46H
PID	Product ID	2AH-2BH	9000H
CHIPR	CHIP Revision	2CH	12H
TCR2	TX Control Register 2	2DH	00H
OCR	Operation Control Register	2EH	00H
SMCR	Special Mode Control Register	2FH	00H
ETXCSR	Early Transmit Control/Status Register	30H	00H
TCSCR	Transmit Check Sum Control Register	31H	00H
RCSCSR	Receive Check Sum Control Status Register	32H	00H
EPADR	External PHY address	33H	01H
GPCR2	General Purpose Control Register 2	34H	00H
GPR2	General Purpose Register 2	35H	00H
GPCR3	General Purpose Control Register 3	36H	00H
GPR3	General Purpose Register 3	37H	00H

BUSCR	Processor Bus Control Register	38H	01H
INTCR	INT Pin Control Register	39H	00H
MONIR1	Monitor Register 1	40H	XXH
MONIR2	Monitor Register 2	41H	XXH
SCCR	System Clock Turn ON Control Register	50H	00H
RSCCR	Resume System Clock Control Register	51H	XXH
MRCMDX	Memory Data Pre-Fetch Read Command Without Address Increment Register	F0H	XXH
MRCMDX1	Memory Data Read Command With Address Increment Register	F1H	XXH
MRCMD	Memory Data Read Command With Address Increment Register	F2H	XXH
MRRL	Memory Data Read_ address Register Low Byte	F4H	00H
MRRH	Memory Data Read_ address Register High Byte	F5H	00H
MWCMDX	Memory Data Write Command Without Address Increment Register	F6H	XXH
MWCMD	Memory Data Write Command With Address Increment Register	F8H	XXH
MWRL	Memory Data Write_ address Register Low Byte	FAH	00H
MWRH	Memory Data Write _ address Register High Byte	FBH	00H
TXPLL	TX Packet Length Low Byte Register	FCH	XXH
TXPLH	TX Packet Length High Byte Register	FDH	XXH
ISR	Interrupt Status Register	FEH	00H
IMR	Interrupt Mask Register	FFH	00H

Key to Default

In the register description that follows, the default column takes the form:
<Reset Value>, <Access Type>
Where：
<Reset Value>:
1 Bit set to logic one
0 Bit set to logic zero
X No default value
P = power on reset default value
H = hardware reset default value
S = software reset default value
E = default value from EEPROM
T = default value from strap pin
<Access Type>:
RO = Read only
RW = Read/Write
R/C = Read and Clear
RW/C1=Read/Write and Cleared by write 1
WO = Write only
Reserved bits are shaded and should be written with 0.
Reserved bits are undefined on read access.

6.1 Network Control Register (00H)

Bit	Name	Default	Description
7	EXT_PHY	PH0,RW	Selects external PHY when set. Selects Internal PHY when clear. This bit will not be affected after software reset
6	WAKEEN	P0,RW	Wakeup Event Enable When set, it enables the wakeup function. Clearing this bit will also clears all wakeup event status This bit will not be affected after a software reset
5	RESERVED	0,RO	Reserved
4	FCOL	PHS0,RW	Force Collision Mode, used for testing
3	FDX	PHS0,RW	Full-Duplex Mode. Read only on Internal PHY mode. R/W on External PHY mode
2:1	LBK	PHS00, RW	Loopback Mode Bit 2 1 0 0 Normal 0 1 MAC Internal Loopback 1 0 Internal PHY 100M mode digital Loopback 1 1 (Reserved)
0	RST	PH0,RW	Software reset and auto clear after 10us

6.2 Network Status Register (01H)

Bit	Name	Default	Description
7	SPEED	X,RO	Media Speed 0:100Mbps 1:10Mbps, when Internal PHY is used. This bit has no meaning when LINKST=0
6	LINKST	X,RO	Link Status 0:link failed 1:link OK, when Internal PHY is used
5	WAKEST	P0, RW/C1	Wakeup Event Status. Clears by read or write 1 This bit will not be affected after software reset
4	RESERVED	0,RO	Reserved
3	TX2END	PHS0, RW/C1	TX Packet 2 Complete Status. Clears by read or write 1 Transmit completion of packet index 2
2	TX1END	PHS0, RW/C1	TX Packet 1 Complete status. Clears by read or write 1 Transmit completion of packet index 1
1	RXOV	PHS0,RO	RX FIFO Overflow
0	RESERVED	0,RO	Reserved

6.3 TX Control Register (02H)

Bit	Name	Default	Description
7	RESERVED	0,RO	Reserved
6	TJDIS	PHS0,RW	Transmit Jabber Disable When set, the transmit Jabber Timer (2048 bytes) is disabled. Otherwise it is Enable
5	EXCECM	PHS0,RW	Excessive Collision Mode Control : 0:aborts this packet when excessive collision counts more than 15, 1: still tries to transmit this packet
4	PAD_DIS2	PHS0,RW	PAD Appends Disable for Packet Index 2
3	CRC_DIS2	PHS0,RW	CRC Appends Disable for Packet Index 2
2	PAD_DIS1	PHS0,RW	PAD Appends Disable for Packet Index 1
1	CRC_DIS1	PHS0,RW	CRC Appends Disable for Packet Index 1
0	TXREQ	PHS0,RW	TX Request. Auto clears after sending completely

6.4 TX Status Register I (03H) for packet index I

Bit	Name	Default	Description
7	TJTO	PHS0,RO	Transmit Jabber Time Out It is set to indicate that the transmitted frame is truncated due to more than 2048 bytes are transmitted
6	LC	PHS0,RO	Loss of Carrier It is set to indicate the loss of carrier during the frame transmission. It is not valid in internal Loopback mode
5	NC	PHS0,RO	No Carrier It is set to indicate that there is no carrier signal during the frame transmission. It is not valid in internal Loopback mode
4	LC	PHS0,RO	Late Collision It is set when a collision occurs after the collision window of 64 bytes
3	COL	PHS0,RO	Collision Packet It is set to indicate that the collision occurs during transmission
2	EC	PHS0,RO	Excessive Collision It is set to indicate that the transmission is aborted due to 16 excessive collisions
1:0	RESERVED	0,RO	Reserved

6.5 TX Status Register II (04H) for packet index I I

Bit	Name	Default	Description
7	TJTO	PHS0,RO	Transmit Jabber Time Out It is set to indicate that the transmitted frame is truncated due to more than 2048 bytes are transmitted
6	LC	PHS0,RO	Loss of Carrier It is set to indicate the loss of carrier during the frame transmission. It is not valid in internal Loopback mode
5	NC	PHS0,RO	No Carrier It is set to indicate that there is no carrier signal during the frame transmission. It is not valid in internal Loopback mode
4	LC	PHS0,RO	Late Collision It is set when a collision occurs after the collision window of 64 bytes
3	COL	PHS0,RO	Collision packet, collision occurs during transmission
2	EC	PHS0,RO	Excessive Collision It is set to indicate that the transmission is aborted due to 16 excessive collisions
1:0	RESERVED	0,RO	Reserved

6.6 RX Control Register (05H)

Bit	Name	Default	Description
7	HASHALL	PHS0,RW	Filter All address in Hash Table
6	WTDIS	PHS0,RW	Watchdog Timer Disable When set, the Watchdog Timer (2048 bytes) is disabled. Otherwise it is enabled
5	DIS_LONG	PHS0,RW	Discard Long Packet Packet length is over 1522byte
4	DIS_CRC	PHS0,RW	Discard CRC Error Packet
3	ALL	PHS0,RW	Pass All Multicast
2	RUNT	PHS0,RW	Pass Runt Packet
1	PRMSC	PHS0,RW	Promiscuous Mode
0	RXEN	PHS0,RW	RX Enable

6.7 RX Status Register (06H)

Bit	Name	Default	Description
7	RF	PHS0,RO	Runt Frame It is set to indicate that the size of the received frame is smaller than 64 bytes
6	MF	PHS0,RO	Multicast Frame It is set to indicate that the received frame has a multicast address
5	LCS	PHS0,RO	Late Collision Seen It is set to indicate that a late collision is found during the frame reception
4	RWTO	PHS0,RO	Receive Watchdog Time-Out It is set to indicate that it receives more than 2048 bytes
3	PLE	PHS0,RO	Physical Layer Error It is set to indicate that a physical layer error is found during the frame reception
2	AE	PHS0,RO	Alignment Error It is set to indicate that the received frame ends with a non-byte boundary
1	CE	PHS0,RO	CRC Error It is set to indicate that the received frame ends with a CRC error
0	FOE	PHS0,RO	FIFO Overflow Error It is set to indicate that a FIFO overflow error happens during the frame reception

6.8 Receive Overflow Counter Register (07H)

Bit	Name	Default	Description
7	RXFU	PHS0,R/C	Receive Overflow Counter Overflow This bit is set when the ROC has an overflow condition
6:0	ROC	PHS0,R/C	Receive Overflow Counter This is a statistic counter to indicate the received packet count upon FIFO overflow

6.9 Back Pressure Threshold Register (08H)

Bit	Name	Default	Description
7:4	BPHW	PHS3, RW	Back Pressure High Water Overflow Threshold. MAC will generate the jam pattern when RX SRAM free space is lower than this threshold value Default is 3K-byte free space. Please do not exceed SRAM size (1 unit=1K bytes)
:0	JPT	PHS7, RW	Jam Pattern Time. Default is 200us bit3 bit2 bit1 bit0 time 0 0 0 0 5us 0 0 0 1 10us 0 0 1 0 15us 0 0 1 1 25us 0 1 0 0 50us 0 1 0 1 100us 0 1 1 0 150us 0 1 1 1 200us 1 0 0 0 250us 1 0 0 1 300us 1 0 1 0 350us 1 0 1 1 400us 1 1 0 0 450us 1 1 0 1 500us 1 1 1 0 550us 1 1 1 1 600us

6.10 Flow Control Threshold Register (09H)

Bit	Name	Default	Description
7:4	HWOT	PHS3, RW	RX FIFO High Water Overflow Threshold Send a pause packet with pause_ time=FFFFH when the RX RAM free space is less than this value., If this value is zero, its means no free RX SRAM space. Default is 3K-byte free space. Please do not exceed SRAM size (1 unit=1K bytes)
3:0	LWOT	PHS8, RW	RX FIFO Low Water Overflow Threshold Send a pause packet with pause time=0000 when RX SRAM free space is larger than this value. This pause packet is enabled after the high water pause packet is transmitted. Default SRAM free space is 8K-byte. Please do not exceed SRAM size (1 unit=1K bytes)

6.11 RX/TX Flow Control Register (0AH)

Bit	Name	Default	Description
7	TXP0	HPS0,RW	TX Pause Packet Auto clears after pause packet transmission completion. Set to TX pause packet with time = 0000h
6	TXPF	HPS0,RW	TX Pause packet Auto clears after pause packet transmission completion. Set to TX pause packet with time = FFFFH
5	TXPEN	HPS0,RW	Force TX Pause Packet Enable Enables the pause packet for high/low water threshold control

4	BKPA	HPS0,RW	Back Pressure Mode This mode is for half duplex mode only. It generates a jam pattern when any packet comes and RX SRAM is over BPHW
3	BKPM	HPS0,RW	Back Pressure Mode This mode is for half duplex mode only. It generates a jam pattern when a packet's DA matches and RX SRAM is over BPHW
2	RXPS	HPS0,R/C	RX Pause Packet Status, latch and read clearly
1	RXPCS	HPS0,RO	RX Pause Packet Current Status
0	FLCE	HPS0,RW	Flow Control Enable Set to enable the flow control mode (i.e. to disable TX function)

6.12 EEPROM & PHY Control Register (0BH)

Bit	Name	Default	Description
7:6	RESERVED	0,RO	Reserved
5	REEP	PH0,RW	Reload EEPROM. Driver needs to clear it up after the operation completes
4	WEP	PH0,RW	Write EEPROM Enable
3	EPOS	PH0,RW	EEPROM or PHY Operation Select When reset, select EEPROM; when set, select PHY
2	ERPRR	PH0,RW	EEPROM Read or PHY Register Read Command. Driver needs to clear it up after the operation completes.
1	ERPRW	PH0,RW	EEPROM Write or PHY Register Write Command. Driver needs to clear it up after the operation completes.
0	ERRE	PH0,RO	EEPROM Access Status or PHY Access Status When set, it indicates that the EEPROM or PHY access is in progress

6.13 EEPROM & PHY Address Register (0CH)

Bit	Name	Default	Description
7:6	PHY_ADR	PH01,RW	PHY Address bit 1 and 0; the PHY address bit [4:2] is force to 0. Force to 01 if internal PHY is selected
5:0	EROA	PH0,RW	EEPROM Word Address or PHY Register Address

6.14 EEPROM & PHY Data Register (EE_PHY_L：0DH EE_PHY_H：0EH)

Bit	Name	Default	Description
7:0	EE_PHY_L	PH0,RW	EEPROM or PHY Low Byte Data This data is made to write low byte of word address defined in Reg. CH to EEPROM or PHY
7:0	EE_PHY_H	PH0,RW	EEPROM or PHY High Byte Data This data is made to write high byte of word address defined in Reg. CH to EEPROM or PHY

6.15 Wake up Control Register (0FH)

Bit	Name	Type	Description
7:6	RESERVED	0,RO	Reserved
5	LINKEN	P0,RW	When set, it enables Link Status Change Wake up Event This bit will not be affected after software reset
4	SAMPLEEN	P0,RW	When set, it enables Sample Frame Wake up Event This bit will not be affected after software reset
3	MAGICEN	P0,RW	When set, it enables Magic Packet Wake up Event

			This bit will not be affected after software reset
2	LINKST	P0,RO	When set, it indicates that Link Change and Link Status Change Event occurred This bit will not be affected after software reset
1	SAMPLEST	P0,RO	When set, it indicates that the sample frame is received and Sample Frame Event occurred. This bit will not be affected after software reset
0	MAGICST	P0,RO	When set, indicates the Magic Packet is received and Magic packet Event occurred. This bit will not be affected after a software reset

6.16 Physical Address Register (10H~15H)

Bit	Name	Default	Description
7:0	PAB5	E,RW	Physical Address Byte 5 (15H)
7:0	PAB4	E,RW	Physical Address Byte 4 (14H)
7:0	PAB3	E,RW	Physical Address Byte 3 (13H)
7:0	PAB2	E,RW	Physical Address Byte 2 (12H)
7:0	PAB1	E,RW	Physical Address Byte 1 (11H)
7:0	PAB0	E,RW	Physical Address Byte 0 (10H)

6.17 Multicast Address Register (16H~1DH)

Bit	Name	Default	Description
7:0	MAB7	X,RW	Multicast Address Byte 7 (1DH)
7:0	MAB6	X,RW	Multicast Address Byte 6 (1CH)
7:0	MAB5	X,RW	Multicast Address Byte 5 (1BH)
7:0	MAB4	X,RW	Multicast Address Byte 4 (1AH)
7:0	MAB3	X,RW	Multicast Address Byte 3 (19H)
7:0	MAB2	X,RW	Multicast Address Byte 2 (18H)
7:0	MAB1	X,RW	Multicast Address Byte 1 (17H)
7:0	MAB0	X,RW	Multicast Address Byte 0 (16H)

6.18 General purpose control Register (1EH)

Bit	Name	Default	Description
7	RESERVED	0,RO	Reserved
6:4	GPC64	PH, 111,RO	General Purpose Control 6~4 Define the input/output direction of pins GPIO6~4 respectively. These bits are all forced to “1”s, so pins GPIO6~4 are output only.
3:1	GPC31	PH, 000,RW	General Purpose Control 3~1 Define the input/output direction of pins GPIO 3~1 respectively. When a bit is set 1, the direction of correspondent bit of General Purpose Register is output. Other defaults are input
0	GPC0	PH1,RO	General Purpose Control 0 This bit defines the input/output direction of pin GPIO0. These bits are forced to “1”, so pin GPIO0 is output only. Pin GPIO0 is forced to output for internal PHYceiver power down function.

6.19 General purpose Register (1FH)

Bit	Name	Default	Description
7	RESERVED	0,RO	Reserved
6:4	GEPIO6-4	PH0,RW	General Purpose Data 6~4 These bits are reflect to pin GEPIO6~4 respectively.

3:1	GEPIO3-1	PH0,RW	General Purpose 3~1 When the correspondent bit of General Purpose Control Register is 1, the value of the bit is reflected to pin GEPIO3-1 When the correspondent bit of General Purpose Control Register is 0, the value of the bit to be read is reflected from correspondent pins of GEPIO3-1 The GEPIOs are mapped to pins GEPIO3 to GEPIO1 respectively
0	GEPIO0	ET1,RW	General Purpose 0 The value of the bit is the output to pin GEPIO0 This bit also defines the power down status of Internal PHYceiver. Driver needs to clear this bit by writing "0" when it wants internal PHYceiver to be power up. This default value can be programmed by strap pin GPIO4 or EEPROM. Please refer to the EEPROM description

6.20 TX SRAM Read Pointer Address Register (22H~23H)

Bit	Name	Default	Description
7:0	TRPAH	PS0,RO	TX SRAM Read Pointer Address High Byte (23H)
7:0	TRPAL	PS0.RO	TX SRAM Read Pointer Address Low Byte (22H)

6.21 RX SRAM Write Pointer Address Register (24H~25H)

Bit	Name	Default	Description
7:0	RWPAH	PS,0CH,RO	RX SRAM Write Pointer Address High Byte (25H)
7:0	RWPAL	PS,04H.RO	RX SRAM Write Pointer Address Low Byte (24H)

6.22 Vendor ID Register (28H~29H)

Bit	Name	Default	Description
7:0	VIDH	PHE,0AH,RO	Vendor ID High Byte (29H)
7:0	VIDL	PHE,46H.RO	Vendor ID Low Byte (28H)

6.23 Product ID Register (2AH~2BH)

Bit	Name	Default	Description
7:0	PIDH	PHE,90H,RO	Product ID High Byte (2BH)
7:0	PIDL	PHE,00H.RO	Product ID Low Byte (2AH)

6.24 Chip Revision Register (2CH)

Bit	Name	Default	Description
7:0	CHIPR	12H,RO	CHIP Revision

6.25 Transmit Control Register 2 (2DH)

Bit	Name	Default	Description
7	LED	PH0,RW	Led Mode When set, the LED pins act as led mode 1. When cleared, the led mode is depending on strap pin or EEPROM setting.

6	RLCP	PH0,RW	Retry Late Collision Packet Re-transmit the packet with late-collision
5	DTU	PH0,RW	Disable TX Under run Retry Disable to re-transmit the underruned packet
4	ONEPM	PH0,RW	One Packet Mode When set, only one packet transmit command can be issued before transmit completed. When cleared, at most two packet transmit command can be issued before transmit completed.
3~0	IFGS	PH0,RW	Inter-Frame Gap Setting 0XXX: 96-bit 1000: 64-bit 1001: 72-bit 1010:80-bit 1011:88-bit 1100:96-bit 1101:104-bit 1110: 112-bit 1111:120-bit

6.26 Operation Test Control Register (2EH)

Bit	Name	Default	Description
7~6	SCC	PH0,RW	System Clock Control Set the internal system clock. 00: 50Mhz 01: 20MHz 10: 100MHz 11: 1KHz In external MII mode, only internal system clock is always 50Mhz.
5	EXTMII	PH0,RW	Force to External MII mode
4	SOE	PH0,RW	SRAM Output-Enable Always ON
3	SCS	PH0,RW	SRAM Chip-Select Always ON
2~0	PHYOP	PH0,RW	PHY operation mode

6.27 Special Mode Control Register (2FH)

Bit	Name	Default	Description
7	SM_EN	HPS0,RW	Special Mode Enable
6~3	RESERVED	HPS0,RO	Reserved
2	FLC	HPS0,RW	Force Late Collision
1	FB1	HPS0,RW	Force Longest Back-off time
0	FB0	HPS0,RW	Force Shortest Back-off time

6.28 Early Transmit Control/Status Register (30H)

Bit	Name	Default	Description
7	ETE	HPS0, RW	Early Transmit Enable Enable bits[1:0]

6	ETS2	HPS0,RO	Early Transmit Status II (under run)
5	ETS1	HPS0,RO	Early Transmit Status I (under run)
4~2	RESERVED	000,RO	Reserved
1~0	ETT	HPS0,RW	Early Transmit Threshold Start transmit when data write to TX FIFO reach the byte-count threshold Bit-1 bit-0 threshold ----- ---- ---------- 0 0 : 12.5% 0 1 : 25% 1 0 : 50% 1 1 : 75%

6.29 Transmit Check Sum Control Register (31H)

Bit	Name	Default	Description
7~3	RESERVED	0,RO	Reserved
2	UDPCSE	HPS0,RW	UDP Checksum Generation Enable
1	TCPCSE	HPS0,RW	TCP Checksum Generation Enable
0	IPCSE	HPS0,RW	IP Checksum Generation Enable

6.30 Receive Check Sum Control Status Register (32H)

Bit	Name	Default	Description
7	UDPS	HPS0,RO	UDP Checksum Status 0: checksum OK, if UDP packet
6	TCPS	HPS0,RO	TCP Checksum Status 0: checksum OK, if TCP packet
5	IPS	HPS0,RO	IP Checksum Status 0: checksum OK, if IP packet
4	UDPP	HPS0,RO	UDP Packet
3	TCPP	HPS0,RO	TCP Packet
2	IPP	HPS0,RO	IP Packet
1	RCSEN	HPS0,RW	Receive Checksum Checking Enable When set, the checksum status will store in packet first byte of status header.
0	DCSE	HPS0,RW	Discard Checksum Error Packet When set, if IP/TCP/UDP checksum field is error, this packet will be discarded.

6.31 External PHYceiver Address Register (33H)

Bit	Name	Default	Description
7	ADR_EN	HPS0,RW	External PHY Address Enabled When set in external MII mode, the external PHYceiver address is defined at bit 4~0.
6~5	Reserved	HPS0,RO	Reserved
4~0	EPHYADR	HPS01,RW	External PHY Address Bit 4~0 The PHY address in external MII mode.

6.32 General Purpose Control Register 2 (34H)

Bit	Name	Default	Description
7~0	GPC2	HP0,RW	General Purpose Control 2 Define the input/output direction of pins SD23~16, which are used as general purpose pins when none 32-bit mode and external MII mode, respectively.

6.33 General Purpose Register 2 (35H)

Bit	Name	Default	Description
7~0	GPD2	HP0,RW	General Purpose Register 2 Data When the correspondent bit of General Purpose Control Register 2 is set, the value of the bit is reflected to pin SD23~16 When the correspondent bit of General Purpose Control Register 2 is 0, the value of the bit to be read is reflected from correspondent pins SD23~16

6.34 General Purpose Control Register 3 (36H)

Bit	Name	Default	Description
7~0	GPC3	HP0,RW	General Purpose Control 3 Define the input/output direction of pins SD31~24, which are used as general purpose pins when none 32-bit mode and external MII mode, respectively.

6.35 General Purpose Register 3 (37H)

Bit	Name	Default	Description
7~0	GPD3	HP0,RW	General Purpose Register 3 Data When the correspondent bit of General Purpose Control Register 3 is set, the value of the bit is reflected to pin SD31~24 When the correspondent bit of General Purpose Control Register 3 is 0, the value of the bit to be read is reflected from correspondent pins SD31~24

6.36 Processor Bus Control Register (38H)

Bit	Name	Default	Description
7	Reserved	P0,RW	Reserved
6:5	CURR	P00,RW	Data Bus Current Driving/Sinking Capability 00: 2mA (default) 01: 4mA 10: 6mA 11: 8mA
4	Reserved	P0,RW	Reserved
3	GPIO	P0,RW	Enable Schmitt Trigger 1: Pin 35/36/37 (IOR/IOW/CS#) have Schmitt trigger capability.
2	Reserved	P0,RW	Reserved
1	IOW_SPIKE	P0,RW	Eliminate IOW spike 1: eliminate about 2ns IOW spike
0	IOR_SPIKE	P1,RW	Eliminate IOR spike 1: eliminate about 2ns IOR spike

6.37 INT Pin Control Register (39H)

Bit	Name	Default	Description
7:2	Reserved	PS0,RO	Reserved
1	INT_TYPE	PET0,RW	INT Pin Output Type Control 1: INT Open-Collector output 0: INT direct output
0	INT_POL	PET0,RW	INT Pin Polarity Control 1: INT active low 0: INT active high

6.38 Monitor Register 1 (40H)

Bit	Name	Default	Description
7	BWIDTH	T0,RO	8-bit Data Strap Latch Status
6	DWIDTH	T0,RO	32-bit Data Strap Latch Status
5	INTOC	ET0,RO	INT Open-Collect Pin Status
4	INTP	ET0,RO	INT Polarity Pin Status
3	IO16OC	E0,RO	IO16/32 Open-Collect Pin Status
2	IO16P	E0,RO	IO16/32 Polarity Pin Status
1	ILEDM	ET0,RO	LED Mode Status
0	MDIX	ET0,RO	MDIX Strap Pin Status

6.39 Monitor Register 2 (41H)

Bit	Name	Default	Description
7~4	RESERVED	0,RO	Reserved
3	NOEEP	T0,RO	NO Load EEPROM Strap Pin Status
2	EXTMII	T0,RO	External MII Strap Pin Status
1	PHYUP	T0,RO	PHY Power-Up Strap Pin Status
0	RMII	T0,RO	Reverse MII strap Pin Status

6.40 System Clock Turn ON Control Register (50H)

Bit	Name	Default	Description
7:1	Reserved	-	Reserved
0	DIS_CLK	P0,W	Stop Internal System Clock 1: internal system clock turn off, internal PHYceiver also power down 0: internal system clock is ON

6.41 Resume System Clock Control Register (51H)

When the INDEX port set to 51H, the internal system clock is turn ON.

6.42 Memory Data Pre-Fetch Read Command without Address Increment Register (F0H)

Bit	Name	Default	Description
7:0	MRCMDX	X,RO	Read data from RX SRAM. After the read of this command, the read pointer of internal SRAM is unchanged. And the DM9010B starts to pre-fetch the SRAM data to internal data buffers.

6.43 Memory Data Read Command without Address Increment Register (F1H)

Bit	Name	Default	Description
7:0	MRCMDX1	X,RO	Read data from RX SRAM. After the read of this command, the read pointer of internal SRAM is unchanged.

6.44 Memory Data Read Command with Address Increment Register (F2H)

Bit	Name	Default	Description
7:0	MRCMD	X,RO	Read data from RX SRAM. After the read of this command, the read pointer is increased by 1,2, or 4, depends on the operator mode (8-bit,16-bit and 32-bit respectively)

6.45 Memory Data Read address Register (F4H~F5H)

Bit	Name	Default	Description
7:0	MDRAH	PHS0,RW	Memory Data Read_ addresses High Byte. It will be set to 0Ch, when IMR bit7 =1
7:0	MDRAL	PHS0,RW	Memory Data Read_ address Low Byte

6.46 Memory Data Write Command without Address Increment Register (F6H)

Bit	Name	Default	Description
7:0	MWCMDX	X,WO	Write data to TX SRAM. After the write of this command, the write pointer is unchanged

6.47 Memory data write command with address increment Register (F8H)

Bit	Name	Default	Description
7:0	MWCMD	X,WO	Write Data to TX SRAM After the write of this command, the write pointer is increased by 1, 2, or 4, depends on the operator mode. (8-bit, 16-bit,32-bit respectively)

6.48 Memory data write address Register (FAH~FBH)

Bit	Name	Default	Description
7:0	MDRAH	PHS0,RW	Memory Data Write_ address High Byte
7:0	MDRAL	PHS0,RW	Memory Data Write_ address Low Byte

6.49 TX Packet Length Register (FCH~FDH)

Bit	Name	Default	Description
7:0	TXPLH	PHS0,RW	TX Packet Length High byte
7:0	TXPLL	PHS0,RW	TX Packet Length Low byte

6.50 Interrupt Status Register (FEH)

Bit	Name	Default	Description
7:6	IOMODE	T0, RO	Bit 7 Bit 6 0 0 16-bit mode 0 1 32-bit mode 1 0 8-bit mode 1 1 Reserved
5	LNKCHG	PHS0,RW/C1	Link Status Change
4	UDRUN	PHS0,RW/C1	Transmit Under run
3	ROO	PHS0,RW/C1	Receive Overflow Counter Overflow
2	ROS	PHS0,RW/C1	Receive Overflow
1	PT	PHS0,RW/C1	Packet Transmitted
0	PR	PHS0,RW/C1	Packet Received

6.51 Interrupt Mask Register (FFH)

Bit	Name	Default	Description
7	PAR	HPS0,RW	Enable the SRAM read/write pointer to automatically return to the start address when pointer addresses are over the SRAM size. Driver needs to set. When driver sets this bit, REG_F5 will set to 0Ch automatically
6	RESERVED	RO	Reserved
5	LNKCHGI	PHS0,RW	Enable Link Status Change Interrupt
4	UDRUNI	PHS0,RW	Enable Transmit Under run Interrupt
3	ROOI	PHS0,RW	Enable Receive Overflow Counter Overflow Interrupt
2	ROI	PHS0,RW	Enable Receive Overflow Interrupt
1	PTI	PHS0,RW	Enable Packet Transmitted Interrupt
0	PRI	PHS0,RW	Enable Packet Received Interrupt

7. EEPROM Format

name	Word	offset	Description
MAC address	0	0~5	6 Byte Ethernet Address
Auto Load Control	3	6-7	Bit 1:0=01: Update vendor ID and product ID Bit 3:2=01: Accept setting of WORD6 [8:0] Bit 5:4=01: Accept setting of WORD6 [11:9] Bit 7:6=01: Accept setting of WORD7 [3:0] Bit 11:10=01: Accept setting of WORD7 [7] Bit 13:12=01: Accept setting of WORD7 [8] Bit 15:14=01: Accept setting of WORD7 [14]
Vendor ID	4	8-9	2 byte vendor ID (Default: 0A46H)
Product ID	5	10-11	2 byte product ID (Default: 9000H)
pin control	6	12-13	When word 3 bit [3:2] =01, these bits can control the IOR#, IOW# and INT pins polarity. Bit0: Reserved Bit1: IOR# pin is active low when set (default: active low) Bit2: IOW# pin is active low when set (default: active low) Bit3: INT pin is active low when set (default: active high) Bit4: INT pin s open-collected (default: force output) Bit 8:5: Reserved When word 3 bit [5:4] =01, the I/O base can be re-configured. Bit11:09: I/O base (default: 300H) 000 : 300H 001 : 310H 010 : 320H 011 : 330H 100 : 340H 101 : 350H 110 : 360H 111 : 370H Bit15:12: reserved
Wake-up mode control	7	14-15	Bit0: The WAKE pin is active low when set (default: active high) Bit1: The WAKE pin is in pulse mode when set (default: level mode) Bit2: magic wakeup event is enabled when set. (default: disable)) Bit3: link change wakeup event is enabled when set (default: disable) Bit6:4: reserved Bit7: LED mode 1 (default: 0) Bit8: internal PHY is enabled after power-on (default: disable) Bit13:9: reserved Bit14: 1: HP Auto-MDIX ON, 0: HP Auto-MDIX OFF(default ON) Bit15: reserved
RESERVED	8	16-17	
RESERVED	9	18-19	
RESERVED	10	20-21	
RESERVED	11	22-23	

8. MII REGISTER DESCRIPTION

ADD	Name	15	14	13	12	11	10	9	8	7	6	5	4	3	2	1	0
00	CONTROL	Reset	Loop back	Speed select	Auto-N Enable	Power Down	Isolate	Restart Auto-N	Full Duplex	Coll. Test	Reserved						
		0	0	1	1	0	0	0	1	0	000_0000						
01	STATUS	T4 Cap.	TX FDX Cap.	TX HDX Cap.	10 FDX Cap.	10 HDX Cap.	Reserved				Pream. Supr.	Auto-N Compl.	Remote Fault	Auto-N Cap.	Link Status	Jabber Detect	Extd Cap.
		0	1	1	1	1	0000				1	0	0	1	0	0	1
02	PHYID1	0	0	0	0	0	0	0	1	1	0	0	0	0	0	0	1
03	PHYID2	OUI_LSB						Model No.						Version No.			
		101110						01010						0000			
04	Auto-Neg. Advertise	Next Page	FLP Rcv Ack	Remote Fault	Reserved		FC Adv	T4 Adv	TX FDX Adv	TX HDX Adv	10 FDX Adv	10 HDX Adv	Advertised Protocol Selector Field				
05	Link Part. Ability	LP Next Page	LP Ack	LP RF	Reserved		LP FC	LP T4	LP TX FDX	LP TX HDX	LP 10 FDX	LP 10 HDX	Link Partner Protocol Selector Field				
06	Auto-Neg. Expansion	Reserved											Pardet Fault	LP Next Pg Able	Next Pg Able	New Pg Rcv	LP AutoN Cap.
16	Specified Config.	BP 4B5B	BP SCR	BP ALIGN	BP_ADP OK	Reserved	TX	Reserved	Reserved	Force 100LNK	Reserved	Reserved	RPDCTR-EN	Reset St. Mch	Pream. Supr.	Sleep mode	Remote LoopOut
17	Specified Conf/Stat	100 FDX	100 HDX	10 FDX	10 HDX	Reserved	Reserved	Reserved	PHY ADDR [4:0]					Auto-N. Monitor Bit [3:0]			
18	10T Conf/Stat	Rsvd	LP Enable	HBE Enable	SQUE Enable	JAB Enable	Reserved	Reserved									Polarity Reverse
19	PWDOR	Reserved							PD10DRV	PD100I	PDchip	PDcrm	PDaeq	PDdrv	PDecli	PDeclo	PD10
20	Specified config	TSTSE1	TSTSE2	FORCE_TXSD	FORCE_FEF	Reserved				MDIX_CNTL	AutoNeg_dlpbk	Mdix_fix Value	Mdix_down	MonSel1	MonSel0	Reserved	PD_value

Key to Default

In the register description that follows, the default column takes the form:
<Reset Value>, <Access Type> / <Attribute(s)>

Where：
<Reset Value>:
- 1 Bit set to logic one
- 0 Bit set to logic zero
- X No default value

<Access Type>:
- RO = Read only
- RW = Read/Write

<Attribute (s)>:
- SC = Self clearing
- P = Value permanently set
- LL = Latching low
- LH = Latching high

8.1 Basic Mode Control Register (BMCR) - 00

Bit	Bit Name	Default	Description
0.15	Reset	0, RW/SC	Reset 1=Software reset 0=Normal operation This bit sets the status and controls the PHY registers to their default states. This bit, which is self-clearing, will keep returning a value of one until the reset process is completed
0.14	Loopback	0, RW	Loopback Loop-back control register 1 = Loop-back enabled 0 = Normal operation When in 100Mbps operation mode, setting this bit may cause the descrambler to lose synchronization and produce a 720ms "dead time" before any valid data appears at the MII receive outputs
0.13	Speed selection	1, RW	Speed Select 1 = 100Mbps 0 = 10Mbps Link speed may be selected either by this bit or by auto-negotiation. When auto-negotiation is enabled and bit 12 is set, this bit will return auto-negotiation selected medium type
0.12	Auto-negotiation enable	1, RW	Auto-negotiation Enable 1 = Auto-negotiation is enabled, bit 8 and 13 will be in auto-negotiation status
0.11	Power down	0, RW	Power Down While in the power-down state, the PHY should respond to management transactions. During the transition to power-down state and while in the power-down state, the PHY should not generate spurious signals on the MII 1=Power down 0=Normal operation
0.10	Isolate	0,RW	Isolate Force to 0 in application.
0.9	Restart Auto-negotiation	0,RW/SC	Restart Auto-negotiation 1 = Restart auto-negotiation. Re-initiates the auto-negotiation process. When auto-negotiation is disabled (bit 12 of this register cleared), this bit has no function and it should be cleared. This bit is self-clearing and it will keep returning to a value of 1 until auto-negotiation is initiated by the DM9010B. The operation of the auto-negotiation process will not be affected by the management entity that clears this bit 0 = Normal operation
0.8	Duplex mode	1,RW	Duplex Mode 1 = Full duplex operation. Duplex selection is allowed when Auto-negotiation is disabled (bit 12 of this register is cleared). With auto-negotiation enabled, this bit reflects the duplex capability selected by auto-negotiation 0 = Normal operation
0.7	Collision test	0,RW	Collision Test 1 = Collision test enabled. When set, this bit will cause the COL

			signal to be asserted in response to the assertion of TX_EN in internal MII interface. 0 = Normal operation
0.6-0.0	Reserved	0,RO	Reserved Read as 0, ignore on write

8.2 Basic Mode Status Register (BMSR) - 01

Bit	Bit Name	Default	Description
1.15	100BASE-T4	0,RO/P	100BASE-T4 Capable 1 = DM9010B is able to perform in 100BASE-T4 mode 0 = DM9010B is not able to perform in 100BASE-T4 mode
1.14	100BASE-TX full-duplex	1,RO/P	100BASE-TX Full Duplex Capable 1 = DM9010B is able to perform 100BASE-TX in full duplex mode 0 = DM9010B is not able to perform 100BASE-TX in full duplex mode
1.13	100BASE-TX half-duplex	1,RO/P	100BASE-TX Half Duplex Capable 1 = DM9010B is able to perform 100BASE-TX in half duplex mode 0 = DM9010B is not able to perform 100BASE-TX in half duplex mode
1.12	10BASE-T full-duplex	1,RO/P	10BASE-T Full Duplex Capable 1 = DM9010B is able to perform 10BASE-T in full duplex mode 0 = DM9010B is not able to perform 10BASE-TX in full duplex mode
1.11	10BASE-T half-duplex	1,RO/P	10BASE-T Half Duplex Capable 1 = DM9010B is able to perform 10BASE-T in half duplex mode 0 = DM9010B is not able to perform 10BASE-T in half duplex mode
1.10-1.7	Reserved	0,RO	Reserved Read as 0, ignore on write
1.6	MF preamble suppression	1,RO	MII Frame Preamble Suppression 1 = PHY will accept management frames with preamble suppressed 0 = PHY will not accept management frames with preamble suppressed
1.5	Auto-negotiation Complete	0,RO	Auto-negotiation Complete 1 = Auto-negotiation process completed 0 = Auto-negotiation process not completed
1.4	Remote fault	0, RO/LH	Remote Fault 1 = Remote fault condition detected (cleared on read or by a chip reset). Fault criteria and detection method is DM9010B implementation specific. This bit will set after the RF bit in the ANLPAR (bit 13, register address 05) is set 0 = No remote fault condition detected
1.3	Auto-negotiation ability	1,RO/P	Auto Configuration Ability 1 = DM9010B is able to perform auto-negotiation 0 = DM9010B is not able to perform auto-negotiation
1.2	Link status	0,RO/LL	Link Status 1 = Valid link is established (for either 10Mbps or 100Mbps operation) 0 = Link is not established The link status bit is implemented with a latching function, so that the occurrence of a link failure condition causes the link status bit to be cleared and remain cleared until it is read via the management

			interface
1.1	Jabber detect	0, RO/LH	Jabber Detect 1 = Jabber condition detected 0 = No jabber This bit is implemented with a latching function. Jabber conditions will set this bit unless it is cleared by a read to this register through a management interface or a DM9010B reset. This bit works only in 10Mbps mode
1.0	Extended capability	1,RO/P	Extended Capability 1 = Extended register capable 0 = Basic register capable only

8.3 PHY ID Identifier Register #1 (PHYID1) - 02

The PHY Identifier Registers #1 and #2 work together in a single identifier of the DM9010B. The Identifier consists of a concatenation of the Organizationally Unique Identifier (OUI), a vendor's model number, and a model revision number. DAVICOM Semiconductor's IEEE assigned OUI is 00606E.

Bit	Bit Name	Default	Description
2.15-2.0	OUI_MSB	<0181h>	OUI Most Significant Bits This register stores bit 3 to 18 of the OUI (00606E) to bit 15 to 0 of this register respectively. The most significant two bits of the OUI are ignored (the IEEE standard refers to these as bit 1 and 2)

8.4 PHY ID Identifier Register #2 (PHYID2) - 03

Bit	Bit Name	Default	Description
3.15-3.10	OUI_LSB	<101110>, RO/P	OUI Least Significant Bits Bit 19 to 24 of the OUI (00606E) are mapped to bit 15 to 10 of this register respectively
3.9-3.4	VNDR_MDL	<001011>, RO/P	Vendor Model Number Five bits of vendor model number mapped to bit 9 to 4 (most significant bit to bit 9)
3.3-3.0	MDL_REV	<0000>, RO/P	Model Revision Number Five bits of vendor model revision number mapped to bit 3 to 0 (most significant bit to bit 4)

8.5 Auto-negotiation Advertisement Register (ANAR) - 04

This register contains the advertised abilities of this DM9010B device as they will be transmitted to its link partner during Auto-negotiation.

Bit	Bit Name	Default	Description
4.15	NP	0,RO/P	Next page Indication 0 = No next page available 1 = Next page available The DM9010B has no next page, so this bit is permanently set to 0
4.14	ACK	0,RO	Acknowledge

			1 = Link partner ability data reception acknowledged 0 = Not acknowledged The DM9010B's auto-negotiation state machine will automatically control this bit in the outgoing FLP bursts and set it at the appropriate time during the auto-negotiation process. Software should not attempt to write to this bit.
4.13	RF	0, RW	Remote Fault 1 = Local device senses a fault condition 0 = No fault detected
4.12-4.11	Reserved	X, RW	Reserved Write as 0, ignore on read
4.10	FCS	0, RW	Flow Control Support 1 = Controller chip supports flow control ability 0 = Controller chip doesn't support flow control ability
4.9	T4	0, RO/P	100BASE-T4 Support 1 = 100BASE-T4 is supported by the local device 0 = 100BASE-T4 is not supported The DM9010B does not support 100BASE-T4 so this bit is permanently set to 0
4.8	TX_FDX	1, RW	100BASE-TX Full Duplex Support 1 = 100BASE-TX full duplex is supported by the local device 0 = 100BASE-TX full duplex is not supported
4.7	TX_HDX	1, RW	100BASE-TX Support 1 = 100BASE-TX half duplex is supported by the local device 0 = 100BASE-TX half duplex is not supported
4.6	10_FDX	1, RW	10BASE-T Full Duplex Support 1 = 10BASE-T full duplex is supported by the local device 0 = 10BASE-T full duplex is not supported
4.5	10_HDX	1, RW	10BASE-T Support 1 = 10BASE-T half duplex is supported by the local device 0 = 10BASE-T half duplex is not supported
4.4-4.0	Selector	<00001>, RW	Protocol Selection Bits These bits contain the binary encoded protocol selector supported by this node <00001> indicates that this device supports IEEE 802.3 CSMA/CD

8.6 Auto-negotiation Link Partner Ability Register (ANLPAR) – 05

This register contains the advertised abilities of the link partner when received during Auto-negotiation.

Bit	Bit Name	Default	Description
5.15	NP	0, RO	Next Page Indication 0 = Link partner, no next page available 1 = Link partner, next page available
5.14	ACK	0, RO	Acknowledge 1 = Link partner ability data reception acknowledged 0 = Not acknowledged The DM9010B's auto-negotiation state machine will automatically control this bit from the incoming FLP bursts. Software should not attempt to write to this bit
5.13	RF	0, RO	Remote Fault

			1 = Remote fault indicated by link partner 0 = No remote fault indicated by link partner
5.12-5.11	Reserved	0, RO	Reserved Read as 0, ignore on write
5.10	FCS	0, RO	Flow Control Support 1 = Controller chip supports flow control ability by link partner 0 = Controller chip doesn't support flow control ability by link partner
5.9	T4	0, RO	100BASE-T4 Support 1 = 100BASE-T4 is supported by the link partner 0 = 100BASE-T4 is not supported by the link partner
5.8	TX_FDX	0, RO	100BASE-TX Full Duplex Support 1 = 100BASE-TX full duplex is supported by the link partner 0 = 100BASE-TX full duplex is not supported by the link partner
5.7	TX_HDX	0, RO	100BASE-TX Support 1 = 100BASE-TX half duplex is supported by the link partner 0 = 100BASE-TX half duplex is not supported by the link partner
5.6	10_FDX	0, RO	10BASE-T Full Duplex Support 1 = 10BASE-T full duplex is supported by the link partner 0 = 10BASE-T full duplex is not supported by the link partner
5.5	10_HDX	0, RO	10BASE-T Support 1 = 10BASE-T half duplex is supported by the link partner 0 = 10BASE-T half duplex is not supported by the link partner
5.4-5.0	Selector	<00000>, RO	Protocol Selection Bits Link partner's binary encoded protocol selector

8.7 Auto-negotiation Expansion Register (ANER) - 06

Bit	Bit Name	Default	Description
6.15-6.5	Reserved	0, RO	Reserved Read as 0, ignore on write
6.4	PDF	0, RO/LH	Local Device Parallel Detection Fault PDF = 1: A fault detected via parallel detection function. PDF = 0: No fault detected via parallel detection function
6.3	LP_NP_ABLE	0, RO	Link Partner Next Page Able LP_NP_ABLE = 1: Link partner, next page available LP_NP_ABLE = 0: Link partner, no next page
6.2	NP_ABLE	0,RO/P	Local Device Next Page Able NP_ABLE = 1: DM9010B, next page available NP_ABLE = 0: DM9010B, no next page DM9010B does not support this function, so this bit is always 0
6.1	PAGE_RX	0, RO/LH	New Page Received A new link code word page received. This bit will be automatically cleared when the register (register 6) is read by management
6.0	LP_AN_ABLE	0, RO	Link Partner Auto-negotiation Able A "1" in this bit indicates that the link partner supports Auto-negotiation

8.8 DAVICOM Specified Configuration Register (DSCR) - 16

Bit	Bit Name	Default	Description
16.15	BP_4B5B	0,RW	Bypass 4B5B Encoding and 5B4B Decoding 1 = 4B5B encoder and 5B4B decoder function bypassed 0 = Normal 4B5B and 5B4B operation
16.14	BP_SCR	0, RW	Bypass Scrambler/Descrambler Function 1 = Scrambler and descrambler function bypassed 0 = Normal scrambler and descrambler operation
16.13	BP_ALIGN	0, RW	Bypass Symbol Alignment Function 1 = Receive functions (descrambler, symbol alignment and symbol decoding functions) bypassed. Transmit functions (symbol encoder and scrambler) bypassed 0 = Normal operation
16.12	BP_ADPOK	0, RW	BYPASS ADPOK Force signal detector (SD) active. This register is for debug only, not release to customer 1=Forced SD is OK, 0=Normal operation
16.11	Reserved	RW	Reserved Force to 0 in application
16.10	TX	1, RW	100BASE-TX Mode Control 1 = 100BASE-TX operation
16.9	Reserved	0, RO	Reserved
16.8	Reserved	0, RW	Reserved Force to 0 in application.
16.7	F_LINK_100	0, RW	Force Good Link in 100Mbps 0 = Normal 100Mbps operation 1 = Force 100Mbps good link status This bit is useful for diagnostic purposes
16.6	Reserved	0, RW	Reserved Force to 0 in application.
16.5	Reserved	0, RW	Reserved Force to 0 in application.
16.4	RPDCTR-EN	1, RW	Reduced Power Down Control Enable This bit is used to enable automatic reduced power down 0 = Disable automatic reduced power down 1 = Enable automatic reduced power down
16.3	SMRST	0, RW	Reset State Machine When writes 1 to this bit, all state machines of PHY will be reset. This bit is self-clear after reset is completed
16.2	MFPSC	1, RW	MF Preamble Suppression Control MII frame preamble suppression control bit 1 = MF preamble suppression bit on 0 = MF preamble suppression bit off
16.1	SLEEP	0, RW	Sleep Mode

			Writing a 1 to this bit will cause PHY entering the Sleep mode and power down all circuit except oscillator and clock generator circuit. When waking up from Sleep mode (write this bit to 0), the configuration will go back to the state before sleep; but the state machine will be reset
16.0	RLOUT	0, RW	Remote Loop out Control When this bit is set to 1, the received data will loop out to the transmit channel. This is useful for bit error rate testing

8.9 DAVICOM Specified Configuration and Status Register (DSCSR) - 17

Bit	Bit Name	Default	Description
17.15	100FDX	1, RO	100M Full Duplex Operation Mode After auto-negotiation is completed, results will be written to this bit. If this bit is 1, it means the operation 1 mode is a 100M full duplex mode. The software can read bit [15:12] to see which mode is selected after auto-negotiation. This bit is invalid when it is not in the auto-negotiation mode
17.14	100HDX	1, RO	100M Half Duplex Operation Mode After auto-negotiation is completed, results will be written to this bit. If this bit is 1, it means the operation 1 mode is a 100M half duplex mode. The software can read bit [15:12] to see which mode is selected after auto-negotiation. This bit is invalid when it is not in the auto-negotiation mode
17.13	10FDX	1, RO	10M Full Duplex Operation Mode After auto-negotiation is completed, results will be written to this bit. If this bit is 1, it means the operation 1 mode is a 10M Full Duplex mode. The software can read bit [15:12] to see which mode is selected after auto-negotiation. This bit is invalid when it is not in the auto-negotiation mode
17.12	10HDX	1, RO	10M Half Duplex Operation Mode After auto-negotiation is completed, results will be written to this bit. If this bit is 1, it means the operation 1 mode is a 10M half duplex mode. The software can read bit [15:12] to see which mode is selected after auto-negotiation. This bit is invalid when it is not in the auto-negotiation mode
17.11-17.9	Reserved	0, RO	Reserved Read as 0, ignore on write
17.8-17.4	PHYADR[4:0]	1, RW	PHY Address Bit 4:0 The first PHY address bit transmitted or received is the MSB of the address (bit 4). A station management entity connected to multiple PHY entities must know the appropriate address of each PHY
17.3-17.0	ANMB[3:0]	0, RO	Auto-negotiation Monitor Bits These bits are for debug only. The auto-negotiation status will be written to these bits.

B3	b2	b1	B0	
0	0	0	0	In IDLE state
0	0	0	1	Ability match
0	0	1	0	Acknowledge match
0	0	1	1	Acknowledge match fail
0	1	0	0	Consistency match
0	1	0	1	Consistency match fail
0	1	1	0	Parallel detects signal_link_ready
0	1	1	1	Parallel detects signal_link_ready fail
1	0	0	0	Auto-negotiation completed successfully

8.10 10BASE-T Configuration/Status (10BTCSR) - 18

Bit	Bit Name	Default	Description
18.15	Reserved	0, RO	Reserved Read as 0, ignore on write
18.14	LP_EN	1, RW	Link Pulse Enable 1 = Transmission of link pulses enabled 0 = Link pulses disabled, good link condition forced This bit is valid only in 10Mbps operation
18.13	HBE	1,RW	Heartbeat Enable 1 = Heartbeat function enabled 0 = Heartbeat function disabled When the DM9010B is configured for full duplex operation, this bit will be ignored (the collision/heartbeat function is invalid in full duplex mode)
18.12	SQUELCH	1, RW	Squelch Enable 1 = Normal squelch 0 = Low squelch
18.11	JABEN	1, RW	Jabber Enable Enables or disables the Jabber function when the DM9010B is in 10BASE-T full duplex or 10BASE-T transceiver Loopback mode 1 = Jabber function enabled 0 = Jabber function disabled
18.10	Reserved	0, RW	Reserved Force to 0, in application.
18.9-18.1	Reserved	0, RO	Reserved Read as 0, ignore on write
18.0	POLR	0, RO	Polarity Reversed When this bit is set to 1, it indicates that the 10Mbps cable polarity is reversed. This bit is automatically set and cleared by 10BASE-T module

8.11 Power Down Control Register (PWDOR) - 19

Bit	Bit Name	Default	Description
19.15-19.9	Reserved	0, RO	Reserved Read as 0, ignore on write
19.8	PD10DRV	0, RW	Vendor power down control test
19.7	PD100DL	0, RW	Vendor power down control test
19.6	PDchip	0, RW	Vendor power down control test
19.5	PDcom	0, RW	Vendor power down control test
19.4	PDaeq	0, RW	Vendor power down control test
19.3	PDdrv	0, RW	Vendor power down control test
19.2	PDedi	0, RW	Vendor power down control test
19.1	PDedo	0, RW	Vendor power down control test
19.0	PD10	0, RW	Vendor power down control test

***** When selected, the power down value is control by Register 20.0

8.12 (Specified config) Register – 20

Bit	Bit Name	Default	Description
20.15	TSTSE1	0,RW	Vendor test select control
20.14	TSTSE2	0,RW	Vendor test select control
20.13	FORCE_TXSD	0,RW	Force Signal Detect 1: force SD signal OK in 100M 0: normal SD signal.
20.12	FORCE_FEF	0,RW	Vendor test select control
20.11	NWAY	0,RW	Auto-negotiation Power Saving Mode 0: save power in auto-negotiation state (Default) 1: full power in auto-negotiation state
20.10	TX10M	0,RW	10M Transmit Power Saving Mode 0: full power in 10M mode (Default) 1: save power in 10M mode
20.9	Reserved	0,RW	Reserved
20.8	Reserved	0,RW	Reserved
20.7	MDIX_CNTL	MDI/MDIX,RO	The polarity of MDI/MDIX value 1: MDIX mode 0: MDI mode
20.6	AutoNeg_dpbk	0,RW	Auto-negotiation Loopback 1: test internal digital auto-negotiation Loopback 0: normal.
20.5	Mdix_fix Value	0, RW	MDIX_CNTL force value: When Mdix_down = 1, MDIX_CNTL value depend on the register value.
20.4	Mdix_down	0,RW	MDIX Down Manual force MDI/MDIX. 0: Enable HP Auto-MDIX 1: Disable HP Auto-MDIX , MDIX_CNTL value depend on 20.5
20.3	MonSel1	0,RW	Vendor monitor select
20.2	MonSel0	0,RW	Vendor monitor select
20.1	Reserved	0,RW	Reserved

			Force to 0, in application.
20.0	PD_value	0,RW	Power down control value Decision the value of each field Register 19. 1: power down 0: normal

9. FUNCTIONAL DESCRIPTION

9.1 Host Interface

The host interface is the ISA BUS compatible mode. There are eight IO bases, which are 300H, 310H, 320H, 330H, 340H, 350H, 360H, and 370H. The IO base is latched from strap pins or loaded from the EEPROM.

There are only two addressing ports through the access of the host interface. One port is the INDEX port and the other is the DATA port. The INDEX port is decoded by the pin CMD =0 and the DATA port by the pin CMD =1. The contents of the INDEX port are the register address of the DATA port. Before the access of any register, the address of the register must be saved in the INDEX port.

9.2 Direct Memory Access Control

The DM9010B provides DMA capability to simplify the access of the internal memory. After the programming of the starting address of the internal memory and then issuing a dummy read/write command to load the current data to internal data buffer, the desired location of the internal memory can be accessed by the read/write command registers. The memory's address will be increased with the size that equals to the current operation mode (i.e. the 8-bit, 16-bit or 32-bit mode) and the data of the next location will be loaded into internal data buffer automatically. It is noted that the data of the first access (the dummy read/write command) in a sequential burst should be ignored because that the data was the contents of the last read/write command.

The internal memory size is 16K bytes. The first location of 3K bytes is used for the data buffer of the packet transmission. The other 13K bytes are used for the buffer of the receiving packets. So in the write memory operation, when the bit 7 of IMR is set, the memory address increment will wrap to location 0 if the end of address (i.e. 3K) is reached. In a similar way, in the read memory operation, when the bit 7 of IMR is set, the memory address increment will wrap to location 0x0C00 if the end of address (i.e. 16K) is reached.

9.3 Packet Transmission

There are two packets, sequentially named as index I and index II, can be stored in the TX SRAM at the same time. The index register 02h controls the insertion of CRC and pads. Their statuses are recorded at index registers 03h and 04h respectively.

The start address of transmission is 00h and the current packet is index I after software or hardware reset. Firstly write data to the TX SRAM using the DMA port and then write the byte count to byte_ count register at index register 0fch and 0fdh. Set the bit 1 of control register. The DM9010B starts to transmit the index I packet. Before the transmission of the index I packet ends, the data of the next (index II) packet can be moved to TX SRAM. After the index I packet ends the transmission, write the byte count data of the index II to BYTE_COUNT register and then set the bit 1 of control register to transmit the index II packet. The following packets, named index I, II, I, II, use the same way to be transmitted.

9.4 Packet Reception

The RX SRAM is a ring data structure. The start address of RX SRAM is 0C00h after software or hardware reset. Each packet has a 4-byte header followed with the data of the reception packet which CRC field is included. The format of the 4-byte header is 01h, status, BYTE_COUNT low, and BYTE_COUNT high. It is noted that the start address of each packet is in the proper address boundary which depends on the operation mode (the 8-bit, 16-bit or 32-bit mode).

9.5 100Base-TX Operation

The block diagram in figure 3 provides an overview of the functional blocks contained in the transmit section. The transmitter section contains the following functional blocks:

- 4B5B Encoder
- Scrambler
- Parallel to Serial Converter
- NRZ to NRZI Converter
- NRZI to MLT-3
- MLT-3 Driver

9.5.1 4B5B Encoder

The 4B5B encoder converts 4-bit (4B) nibble data generated by the MAC Reconciliation Layer into a 5-bit (5B) code group for transmission, see reference Table 1. This conversion is required for control and packet data to be combined in code groups. The 4B5B encoder substitutes the first 8 bits of the MAC preamble with a J/K code-group pair (11000 10001) upon transmit. The 4B5B encoder continues to replace subsequent 4B preamble and data nibbles with corresponding 5B code-groups. At the end of the transmit packet, upon the deassertion of the Transmit Enable signal from the MAC Reconciliation layer, the 4B5B encoder injects the T/R code-group pair (01101 00111) indicating the end of frame. After the T/R code-group pair, the 4B5B encoder continuously injects IDLEs into the transmit data stream until Transmit Enable is asserted and the next transmit packet is detected.

The DM9010B includes a Bypass 4B5B conversion option within the 100Base-TX Transmitter for support of applications like 100 Mbps repeaters which do not require 4B5B conversion.

9.5.2 Scrambler

The scrambler is required to control the radiated emissions (EMI) by spreading the transmit energy across the frequency spectrum at the media connector and on the twisted pair cable in 100Base-TX operation.

By scrambling the data, the total energy presented to the cable is randomly distributed over a wide frequency range. Without the scrambler, energy levels on the cable could peak beyond FCC limitations at frequencies related to the repeated 5B sequences, like the continuous transmission of IDLE symbols. The scrambler output is combined with the NRZ 5B data from the code-group encoder via an XOR logic function. The result is a scrambled data stream with sufficient randomization to decrease radiated emissions at critical frequencies.

9.5.3 Parallel to Serial Converter

The Parallel to Serial Converter receives parallel 5B scrambled data from the scrambler, and serializes it (converts it from a parallel to a serial data stream). The serialized data stream is then presented to the NRZ to NRZI encoder block

9.5.4 NRZ to NRZI Encoder

After the transmit data stream has been scrambled and serialized, the data must be NRZI encoded for compatibility with the TP-PMD standard, for 100Base -TX transmission over Category-5 unshielded twisted pair cable.

9.5.5 MLT-3 Converter

The MLT-3 conversion is accomplished by converting The data stream output, from the NRZI encoder into two binary data streams, with alternately phased logic One event.

9.5.6 MLT-3 Driver

The two binary data streams created at the MLT-3 converter are fed to the twisted pair output driver, which converts these streams to current sources and alternately drives either side of the transmit transformer's primary winding, resulting in a minimal current MLT-3 signal. Refer to figure 4 for the block diagram of the MLT-3 converter.

9.5.7 4B5B Code Group

Symbol	Meaning	4B code 3210	5B Code 43210
0	Data 0	0000	11110
1	Data 1	0001	01001
2	Data 2	0010	10100
3	Data 3	0011	10101
4	Data 4	0100	01010
5	Data 5	0101	01011
6	Data 6	0110	01110
7	Data 7	0111	01111
8	Data 8	1000	10010
9	Data 9	1001	10011
A	Data A	1010	10110
B	Data B	1011	10111
C	Data C	1100	11010
D	Data D	1101	11011
E	Data E	1110	11100
F	Data F	1111	11101
I	Idle	undefined	11111
J	SFD (1)	0101	11000
K	SFD (2)	0101	10001
T	ESD (1)	undefined	01101
R	ESD (2)	undefined	00111
H	Error	undefined	00100
V	Invalid	undefined	00000
V	Invalid	undefined	00001
V	Invalid	undefined	00010
V	Invalid	undefined	00011
V	Invalid	undefined	00101
V	Invalid	undefined	00110
V	Invalid	undefined	01000
V	Invalid	undefined	01100
V	Invalid	undefined	10000
V	Invalid	undefined	11001

Table 1

9.6 100Base-TX Receiver

The 100Base-TX receiver contains several function blocks that convert the scrambled 125Mb/s serial data to synchronous 4-bit nibble data that is then provided to the MII.
The receive section contains the following functional blocks:

- Signal Detect
- Digital Adaptive Equalization
- MLT-3 to Binary Decoder
- Clock Recovery Module
- NRZI to NRZ Decoder
- Serial to Parallel
- Descrambler
- Code Group Alignment
- 4B5B Decoder

9.6.1 Signal Detect

The signal detects function meets the specifications mandated by the ANSI XT12 TP-PMD 100Base-TX standards for both voltage thresholds and timing parameters.

9.6.2 Adaptive Equalization

When transmitting data over copper twisted pair cable at high speed, attenuation based on frequency becomes a concern. In high speed twisted pair signaling, the frequency content of the transmitted signal can vary greatly during normal operation based on the randomness of the scrambled data stream. This variation in signal attenuation, caused by frequency variations, must be compensated for to ensure the integrity of the received data. In order to ensure quality transmission when employing MLT-3 encoding, the compensation must be able to adapt to various cable lengths and cable types depending on the installed environment. The selection of long cable lengths for a given implementation requires significant compensation, which will be over-killed in a situation that includes shorter, less attenuating cable lengths. Conversely, the selection of short or intermediate cable lengths requiring less compensation will cause serious under-compensation for longer length cables. Therefore, the compensation or equalization must be adaptive to ensure proper conditioning of the received signal independent of the cable length.

9.6.3 MLT-3 to NRZI Decoder

The DM9010B decodes the MLT-3 information from the Digital Adaptive Equalizer into NRZI data. The relationship between NRZI and MLT-3 data is shown In figure 4.

9.6.4 Clock Recovery Module

The Clock Recovery Module accepts NRZI data from the MLT-3 to NRZI decoder. The Clock Recovery Module locks onto the data stream and extracts the 125 MHz reference clock. The extracted and synchronized clock and data are presented to the NRZI to NRZ decoder.

9.6.5 NRZI to NRZ

The transmit data stream is required to be NRZI encoded for compatibility with the TP-PMD standard for 100Base-TX transmission over Category-5 unshielded twisted pair cable. This conversion process must be reversed on the receive end. The NRZI to NRZ decoder receives the NRZI data stream from the Clock Recovery Module and converts it to a NRZ data stream to be presented to the Serial to Parallel conversion block.

9.6.6 Serial to Parallel

The Serial to Parallel Converter receives a serial data stream from the NRZI to NRZ converter. It converts the data stream to parallel data to be presented to the descrambler.

9.6.7 Descrambler

Because of the scrambling process requires to control the radiated emissions of transmit data streams, the receiver must descramble the receive data streams. The descrambler receives scrambled parallel data streams from the Serial to Parallel converter, and it descrambles the data streams, and presents the data streams to the Code Group alignment block.

9.6.8 Code Group Alignment

The Code Group Alignment block receives un-aligned 5B data from the descrambler and converts it into 5B code group data. Code Group Alignment occurs after the J/K is detected and subsequent data is aligned on a fixed boundary.

9.6.9 4B5B Decoder

The 4B5B Decoder functions as a look-up table that translates incoming 5B code groups into 4B (Nibble) data. When receiving a frame, the first 2 5-bit code groups receive the start-of-frame delimiter (J/K symbols). The J/K symbol pair is stripped and two nibbles of preamble pattern are substituted. The last two code groups are the end-of-frame delimiter (T/R Symbols).

The T/R symbol pair is also stripped from the nibble, presented to the Reconciliation layer.

9.7 10Base-T Operation

The 10Base-T transceiver is IEEE 802.3u compliant. When the DM9010B is operating in 10Base-T mode, the coding scheme is Manchester. Data processed for transmit is presented to the MII interface in nibble format, converted to a serial bit stream, then the Manchester encoded. When receiving, the bit stream, encoded by the Manchester, is decoded and converted into nibble format to present to the MII interface.

9.8 Collision Detection

For half-duplex operation, a collision is detected when the transmit and receive channels are active simultaneously. When a collision is detected, it will be reported by the COL signal on the MII interface. Collision detection is disabled in Full Duplex Operation.

9.9 Carrier Sense

Carrier Sense (CRS) is asserted in half-duplex operation during transmission or reception of data. During full-duplex mode, CRS is asserted only during receive operations.

9.10 Auto-Negotiation

The objective of Auto-negotiation is to provide a means to exchange information between linked devices and to automatically configure both devices to take maximum advantage of their abilities. It is important to note that Auto-negotiation does not test the characteristics of the linked segment. The Auto-Negotiation function provides a means for a device to advertise supported modes of operation to a remote link partner, acknowledge the receipt and understanding of common modes of operation, and to reject un-shared modes of operation. This allows devices on both ends of a segment to establish a link at the best common mode of operation. If more than one common mode exists between the two devices, a mechanism is provided to allow the devices to resolve to a single mode of operation using a predetermined priority resolution function.

Auto-negotiation also provides a parallel detection function for devices that do not support the Auto-negotiation feature. During Parallel detection there is no exchange of information of configuration. Instead, the receive signal is examined. If it is discovered that the signal matches a technology, which the receiving device supports, a connection will be automatically established using that technology. This allows devices not to support Auto-negotiation but support a common mode of operation to establish a link.

9.11 Power Reduced Mode

The Signal detect circuit is always turned to monitor whether there is any signal on the media (cable disconnected). The DM9010B automatically turns off the power and enters the Power Reduced mode, whether its operation mode is N-way or force mode. When enters the Power Reduced mode, the transmit circuit still sends out fast link pules with minimum power consumption. If a valid signal is detected from the media, which might be N-ways fast link pules, 10Base-T normal link pules, or 100Base-TX MLT3 signals, the device will wake up and resume a normal operation mode.

That can be writing Zero to PHY Reg.16.4 to disable Power Reduced mode.

9.11.1 Power Down Mode

The PHY Reg.0.11 can be set high to enter the Power Down mode, which disables all transmit, receive functions and MII interface functions, except the MDC/MDIO management interface.

9.11.2 Reduced Transmit Power Mode

The additional Transmit power reduction can be gained by designing with 1.25:1 turns ration magnetic on its TX side and using a 8.5KΩ resistor on BGRES and AGND pins, and the TXO+/TXO- pulled high resistors should be changed from 50Ω to 78Ω. This configuration could be reduced about 20% transmit power.

10. DC AND AC ELECTRICAL CHARACTERISTICS

10.1 Absolute Maximum Ratings

Symbol	Parameter	Min.	Max.	Unit	Conditions
D_{VDD}	Supply Voltage	-0.3	3.6	V	
V_{IN}	DC Input Voltage (VIN)	-0.5	5.5	V	
V_{OUT}	DC Output Voltage(VOUT)	-0.3	3.6	V	

10.1.1 Operating Conditions

Symbol	Parameter	Min.	Max.	Unit	Conditions
D_{VDD}	Supply Voltage	3.135	3.465	V	
TC	Case Temperature	0	+85	℃	TA = 0 ~ 70 ℃
TA	Ambient Temperature	0	+70	℃	
Tstg	Storage temperature	-65	+150	℃	
LT	Lead Temperature (TL, soldering, 10 sec.).	-	+260	℃	10sec. max.
P_D (Power Dissipation)	100BASE-TX	---	130	mA	3.3V
	10BASE-T TX	---	170	mA	3.3V
	10BASE-T TX (100% utilization)	---	160	mA	3.3V,power saving
	10BASE-T idle	---	60	mA	3.3V,power saving
	Auto-negotiation	---	60	mA	3.3V
	Power Down Mode (system clock off)	---	20	mA	3.3V

10.2 DC Electrical Characteristics (VDD = 3.3V)

Symbol	Parameter	Min.	Typ.	Max.	Unit	Conditions
Inputs						
V_{IL}	Input Low Voltage	-	-	0.8	V	
V_{IH}	Input High Voltage	2.0	-	-	V	
I_{IL}	Input Low Leakage Current	-1	-	-	uA	VIN = 0.0V
I_{IH}	Input High Leakage Current	-	-	1	uA	VIN = 3.3V
Outputs						
V_{OL}	Output Low Voltage	-	-	0.4	V	IOL = 4mA
V_{OH}	Output High Voltage	2.4	-	-	V	IOH = -4mA
Receiver						
V_{ICM}	RX+/RX- Common Mode Input Voltage	-	1.8	-	V	100 Ω Termination Across
Transmitter						
V_{TD100}	100TX+/- Differential Output Voltage	1.9	2.0	2.1	V	Peak to Peak
V_{TD10}	10TX+/- Differential Output Voltage	4.4	5	5.6	V	Peak to Peak
I_{TD100}	100TX+/- Differential Output Current	|19|	|20|	|21|	mA	Absolute Value
I_{TD10}	10TX+/- Differential Output Current	|44|	|50|	|56|	mA	Absolute Value

10.3 AC Electrical Characteristics & Timing Waveforms

10.3.1 TP Interface

Symbol	Parameter	Min.	Typ.	Max.	Unit	Conditions
$t_{TR/F}$	100TX+/- Differential Rise/Fall Time	3.0	-	5.0	ns	
t_{TM}	100TX+/- Differential Rise/Fall Time Mismatch	0	-	0.5	ns	
t_{TDC}	100TX+/- Differential Output Duty Cycle Distortion	0	-	0.5	ns	
$t_{T/T}$	100TX+/- Differential Output Peak-to-Peak Jitter	0	-	1.4	ns	
X_{OST}	100TX+/- Differential Voltage Overshoot	0	-	5	%	

10.3.2 Oscillator/Crystal Timing

Symbol	Parameter	Min.	Typ.	Max.	Unit	Conditions
T_{CKC}	TCKC	39.998	40	40.002	ns	50ppm
T_{PWH}	OSC Pulse Width High	16	20	24	ns	
T_{PWL}	OSC Pulse Width Low	16	20	24	ns	

10.3.3 Power On Reset Timing

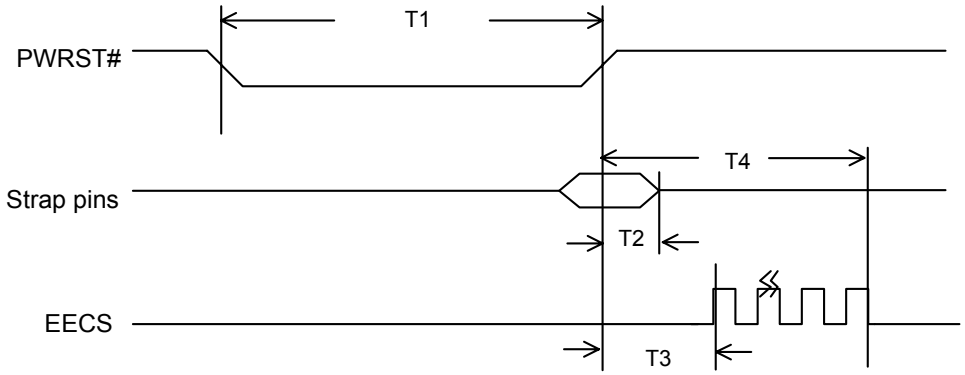

Symbol	Parameter	Min.	Typ.	Max.	Unit	Conditions
T1	PWRST# Low Period	1	-	-	ms	-
T2	Strap pin hold time with PWRST#	40	-	-	ns	-
T3	PWRST# high to EECS high	-	11.31	-	us	
T4	PWRST# high to EECS burst end	-	--	3	ms	

Note: The DM9010B needs the time about 3ms to down load the setting from EEPROM after PWRST# deasserted, During the period, the processor command (IOR#, IOW#, AEN#) pins are not recognized even no EEPROM present. So, please note that processor only access DM9010B after PWRST# deasserted 3ms.

10.3.4 Processor I/O Read Timing

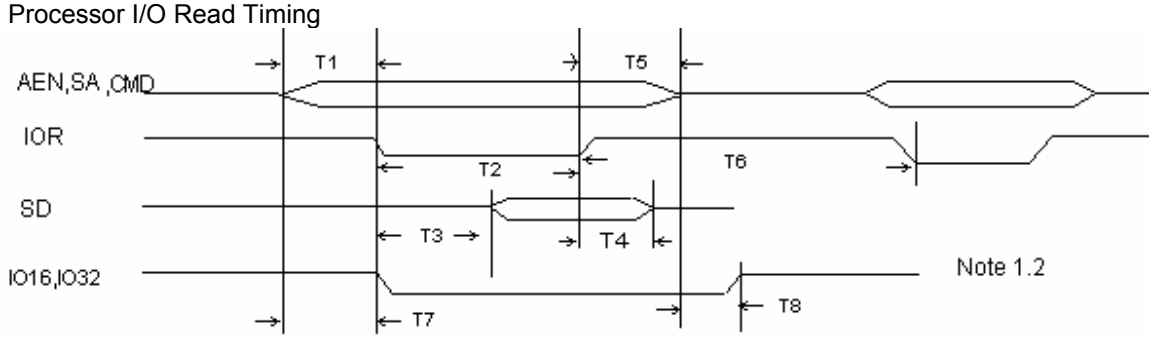

Symbol	Parameter	Min.	Typ.	Max.	Unit
T_1	System Address(SA) valid to IOR# valid	0			ns
T_2	IOR# width	10			ns
T_3	IOR# valid to System Data(SD) valid			3	ns
T_4	IOR# invalid to System Data(SD) bus invalid			3	ns
T_5	IOR# invalid to System Address(SA) invalid	0			ns
T_6	IOR# invalid to next IOR#/IOW# valid When read DM9010B register	2			clk*
T_2+T_6	IOR# valid to next IOR#/IOW# valid When read DM9010B memory with F0h register	4			clk*
T_2+T_6	IOR# valid to next IOR#/IOW# valid When read DM9010B memory with F2h register	1			clk*
T_7	System Address(SA) valid to IO16,IO32 valid			3	ns
T_8	System Address(SA) invalid to IO16, IO32 invalid			3	ns

***Note：(The default clk period is 20ns)**

1. The IO16 is valid when the SD bus width is 16-bit or 32-bit, and the system address is DATA port (i.e. CMD is high) and the value of INDEX port is memory data register index.（ex. F0H, F2H, F6H or F8H）
2. The IO32 is valid when the SD bus width is 32-bit, the system address is DATA port (i.e. CMD is high) and the value of INDEX port is memory data register index（ex. F0H, F2H, F6H or F8H）

10.3.5 Processor I/O Write Timing

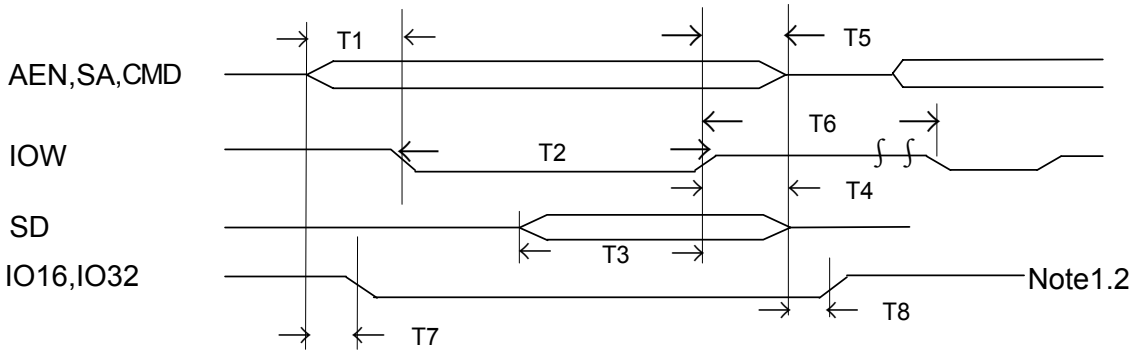

Symbol	Parameter	Min.	Typ.	Max.	Unit
T_1	System Address(SA) valid to IOW# valid	0			ns
T_2	IOW# width	10			ns
T_3	System Data(SD) setup time	3			ns
T_4	System Data (SD) hold time	3			ns
T_5	IOW# invalid to System Address(SA) invalid	0			ns
T_6	IOW# Invalid to next IOW#/IOR# valid When write DM9010B INDEX port	1			clk*
T_6	IOW# Invalid to next IOW#/IOR# valid When write DM9010B DATA port	2			clk*
T_2+T_6	IOW# valid to next IOW#/IOR# valid When write DM9010B memory	1			clk*
T_7	System Address(SA) valid to IO16, IO32 valid			3	ns
T_8	System Address(SA) invalid to IO16, IO32 invalid			3	ns

Note：(The default clk period is 20ns)

1. The IO16 is valid when the SD bus width is 16-bit or 32-bit and system address is DATA port (i.e. CMD is high) and the value of INDEX port is memory data register index (ex. F0H, F2H, F6H or F8H)
2. The IO32 is valid when the SD bus width is 32-bit and system address is DATA port (i.e. CMD is high) and the value of INDEX port is memory data Register index (ex. F0H, F2H, F6H or F8H)

10.3.6 External MII Interface Transmit Timing

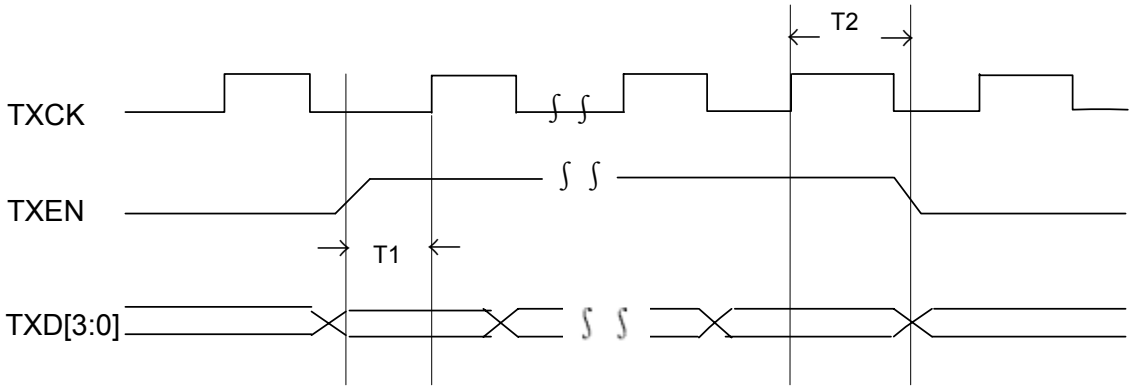

Symbol	Parameter	Min.	Typ.	Max.	Unit
T_1	TXEN,TXD[3：0] Setup Time		32		ns
T_2	TXEN,TXD[3：0] Hold Time		8		ns

10.3.7 External MII Interface Receive Timing

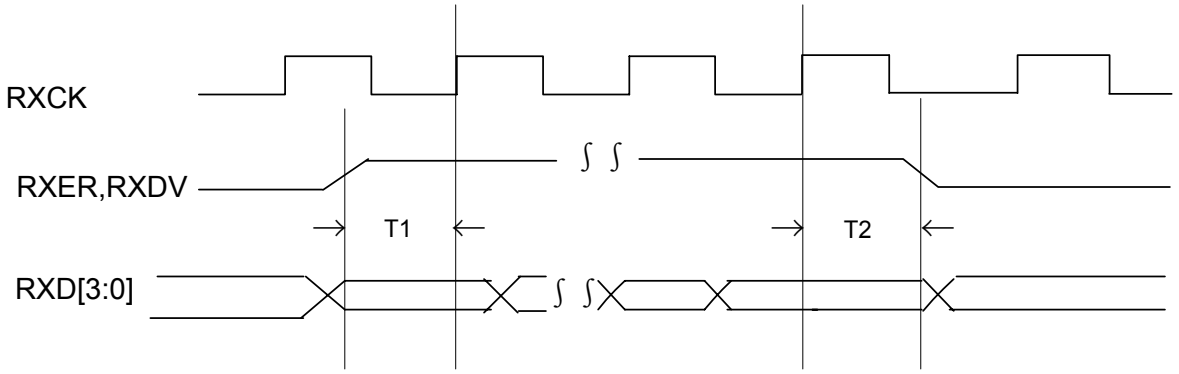

Symbol	Parameter	Min.	Typ.	Max.	Unit
T_1	RXER, RXDV,RXD[3：0] Setup Time	5			ns
T_2	RXER, RXDV,RXD[3：0] Hold Time	5			ns

10.3.8 MII Management Interface Timing

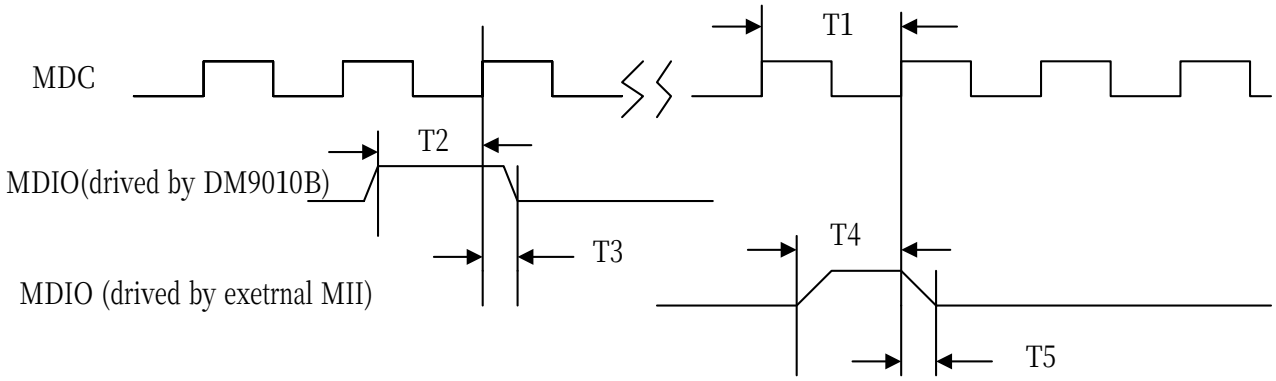

Symbol	Parameter	Min.	Typ.	Max.	Unit
T_1	MDC Frequency		2		MHz
T_2	MDIO by DM9010B Setup Time		187		ns
T_3	MDIO by DM9010B Hold Time		313		ns
T_4	MDIO by External MII Setup Time	40			ns
T_5	MDIO by External MII Hold Time	40			ns

10.3.9 EEPROM Interface Timing

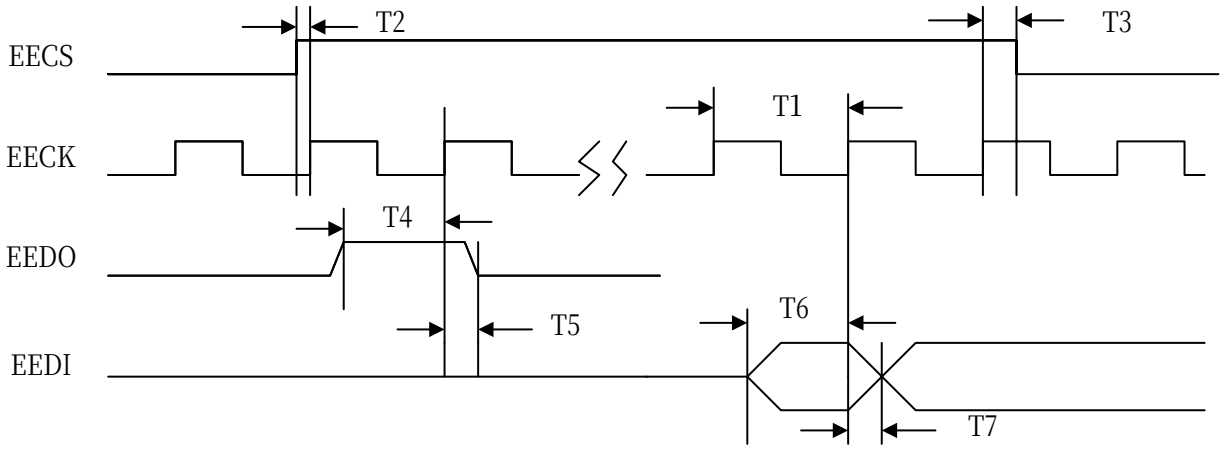

Symbol	Parameter	Min.	Typ.	Max.	Unit
T_1	EECK Frequency		0.375		MHz
T_2	EECS Setup Time		500		ns
T_3	EECS Hold Time		2166		ns
T_4	EEDO Setup Time		480		
T_5	EEDO Hold Time		2200		ns
T_6	EEDI Setup Time	8			ns
T_7	EEDI Hold Time	8			ns

11. APPLICATION NOTES

11.1 Network Interface Signal Routing

Place the transformer as close as possible to the RJ-45 connector. Place all the 50Ω resistors as close as possible to the DM9010B RXI± and TXO± pins. Traces routed from RXI± and TXO± to the transformer should run in close pairs directly to the transformer. The designer should be careful not to cross the transmit and receive pairs. As always, vias should be avoided as much as possible. The network interface should be void of any signals other than the TXO± and RXI± pairs between the RJ-45 to the transformer and the transformer to the DM9010B.. There should be no power or ground planes in the area under the network side of the transformer to include the area under the RJ-45 connector. (Refer to Figure 11-4 and 11-5) Keep chassis ground away from all active signals. The RJ-45 connector and any unused pins should be tied to chassis ground through a resistor divider network and a 2KV bypass capacitor.

The Band Gap resistor should be placed as physically close as pins 25 and 26 as possible (refer to Figure 11-1 and 11-2). The designer should not run any high-speed signal near the Band Gap resistor placement.

11.2 10Base-T/100Base-TX HP Auto-MDIX Application

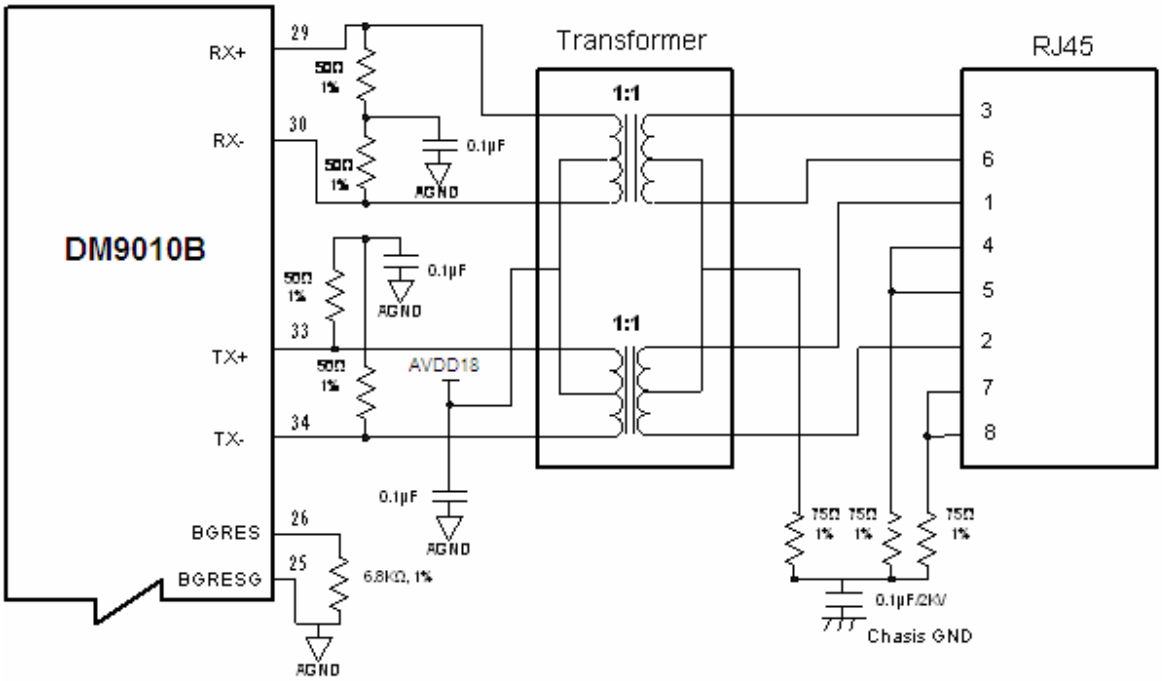

Figure 11-1 HP Auto-MDIX Application

11.3 10Base-T/100Base-TX (Non HP Auto-MDIX Transformer Application)

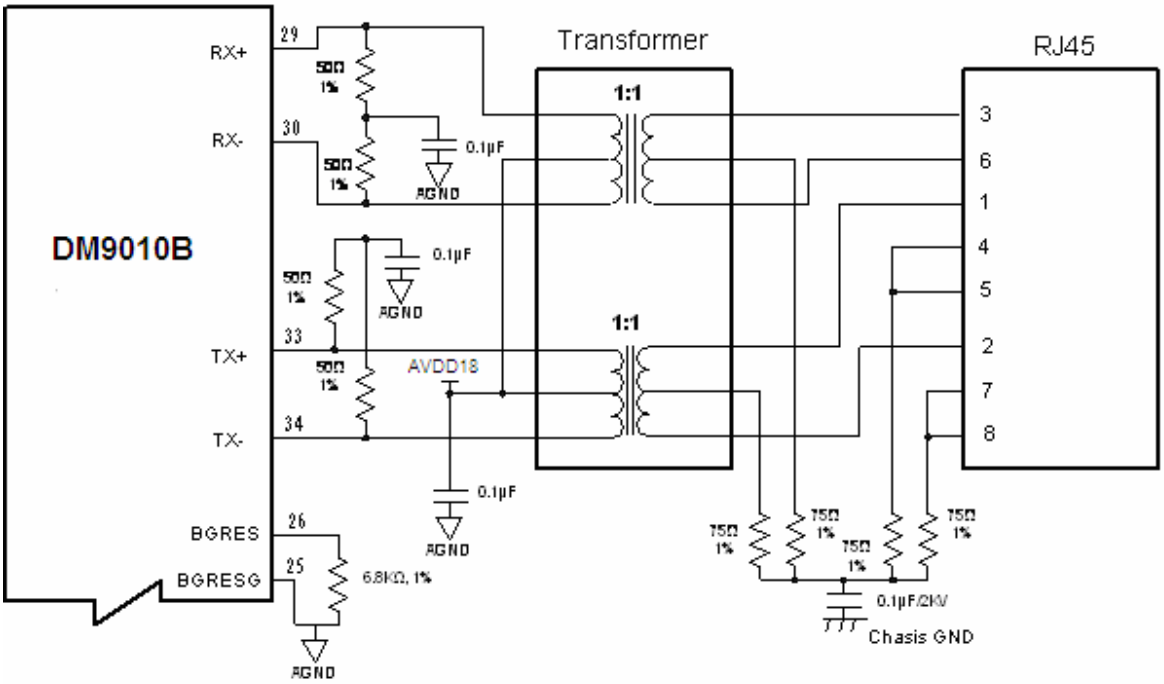

Figure 11-2 Non HP Auto-MDIX Transformer Application

11.4 Power Decoupling Capacitors

Davicom Semiconductor recommends placing all the decoupling capacitors for all power supply pins as close as possible to the power pads of the DM9010B (The best placed distance is < 3mm from pin). The recommended decoupling capacitor is 0.1µF or 0.01µF, as required by the design layout.

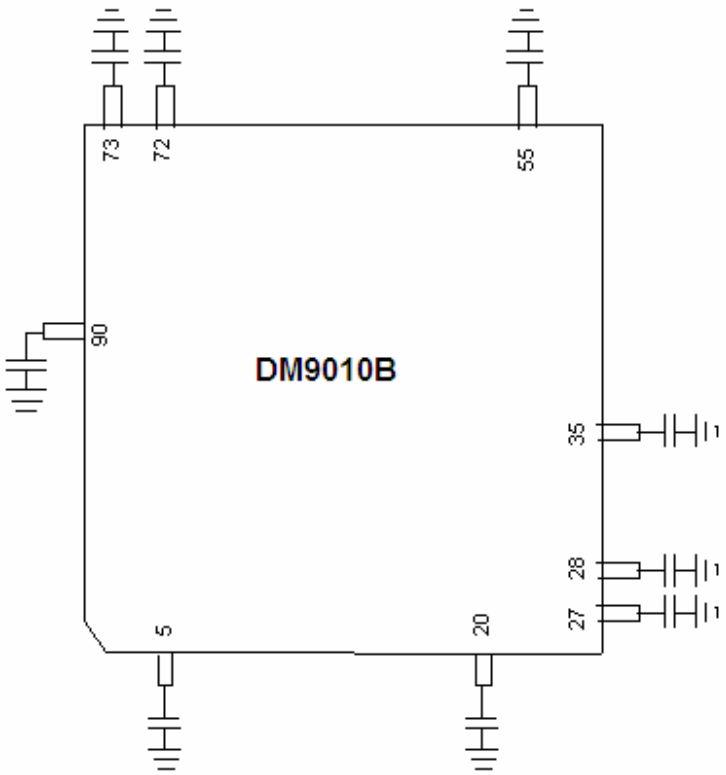

Figure 11-3 Power Decoupling Capacitors

11.5 Ground Plane Layout

Davicom Semiconductor recommends a single ground plane approach to minimize EMI. Ground plane partitioning can cause increased EMI emissions that could make the network interface card not comply with specific FCC regulations (part 15). Figure 11-4 shows a recommended ground layout scheme.

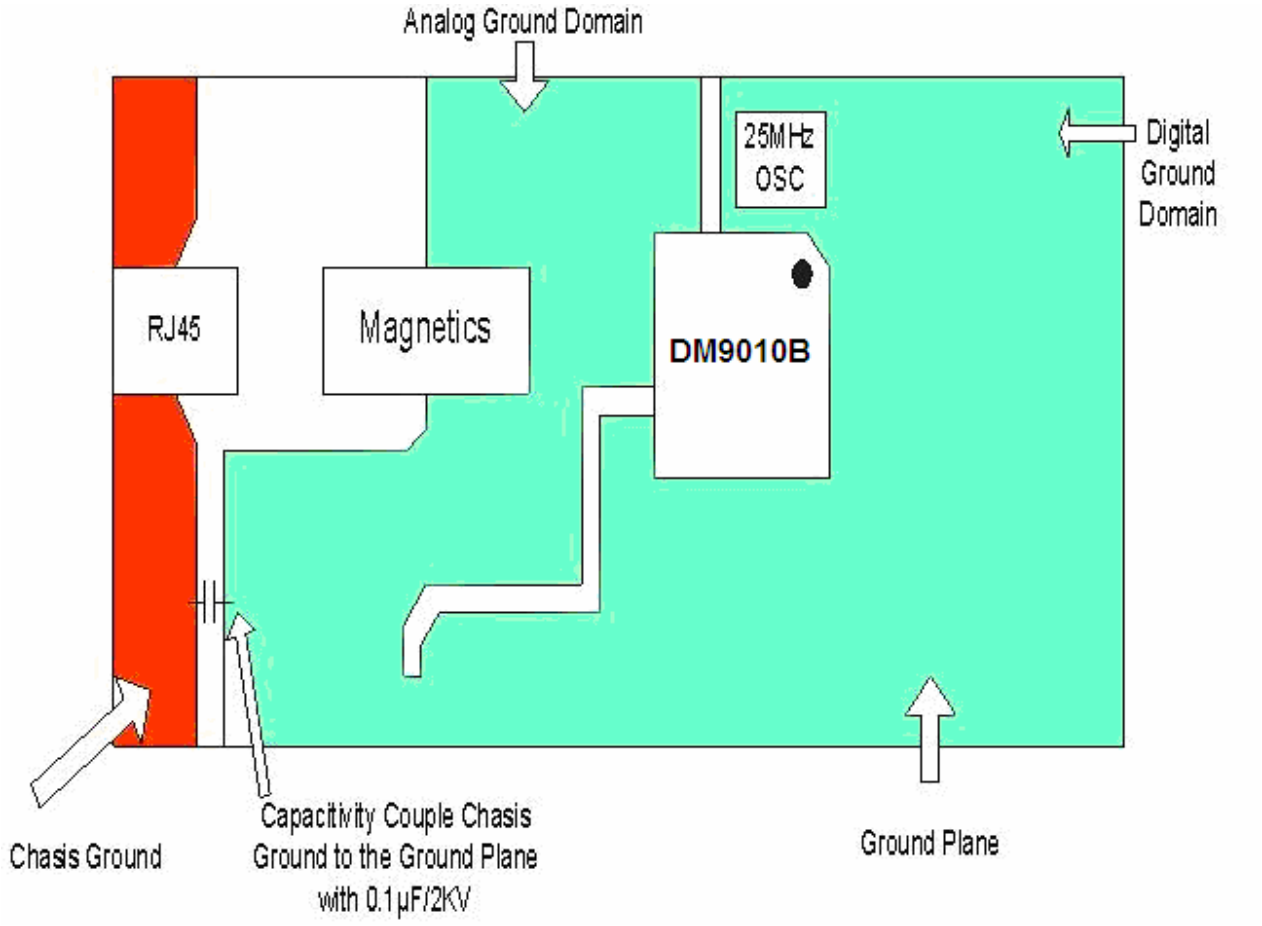

Figure 11-4 Ground Plane Layout

11.6 Power Plane Partitioning

The power planes should be approximately illustrated in Figure 11-5.

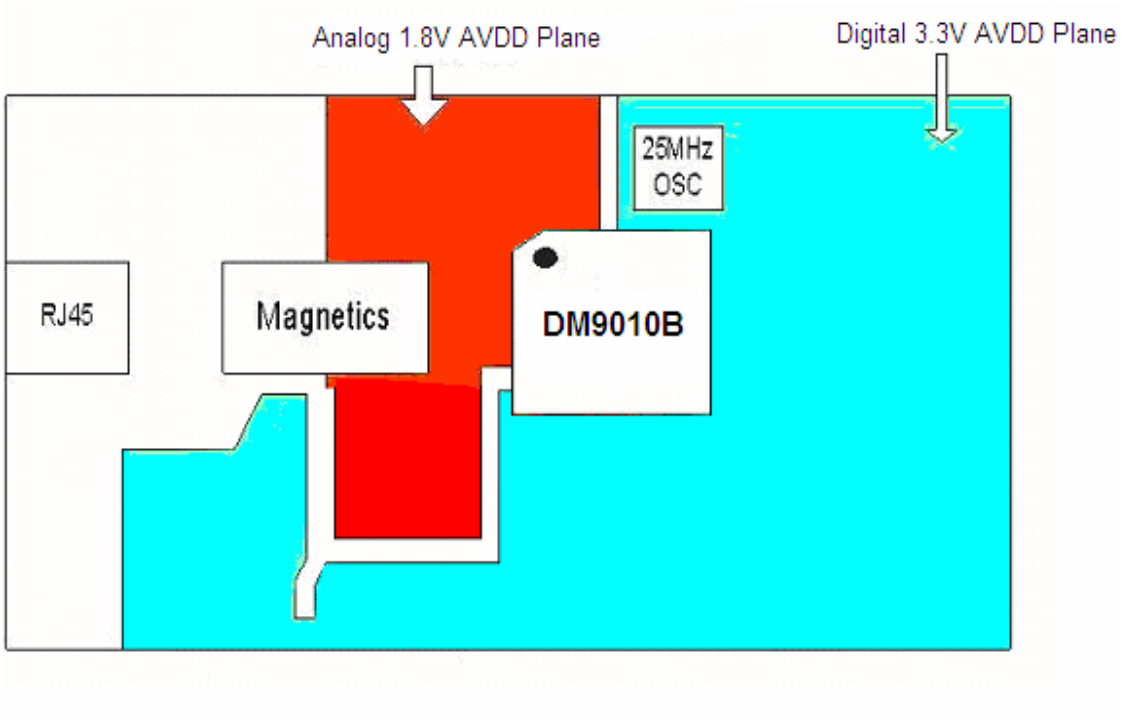

Figure 11-5 Power Plane Partitioning

11.7 Magnetics Selection Guide

Refer to Table 2 for transformer requirements. Transformers, meeting these requirements, are available from a variety of magnetic manufacturers. Designers should test and qualify all magnetics before using them in an application. The transformers listed in Table 2 are electrical equivalents, but may not be pin-to-pin equivalents.

Manufacturer	Part Number
Delta	LF8200, LF8221x
YCL	20PMT04, 20PMT05, PH163112 , YCL 0303 PH163539 *(HP Auto-MDIX)
MAGCOM	HS9016, HS9024
Halo	TG22-3506ND, TD22-3506G1, TG22-S010ND, TG22-S012ND TG110-S050N2
Nano Pulse Inc.	NPI 6181-37, NPI 6120-30, NPI 6120-37 NPI 6170-30
Fil-Mag	PT41715
Bel Fuse	S558-5999-01, S558-5999-W2
Valor	ST6114, ST6118
Macronics	HS2123, HS2213
Bothhand	TS6121C,16ST8515,16ST1086

Table 2

11.8 Crystal Selection Guide

A crystal can be used to generate the 25MHz reference clock instead of an oscillator. The crystal must be a fundamental type, and series-resonant. Connects to pins X1 and X2, and shunts each crystal lead to ground with a 22pf capacitor (see figure 11-6).

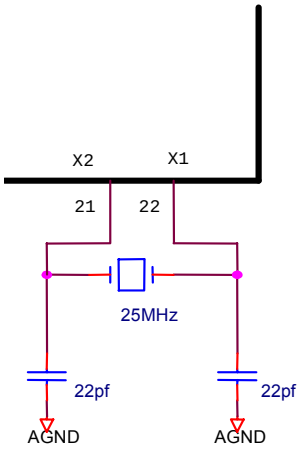

Figure 11-6
Crystal Circuit Diagram

11.9 Application of reverse MII

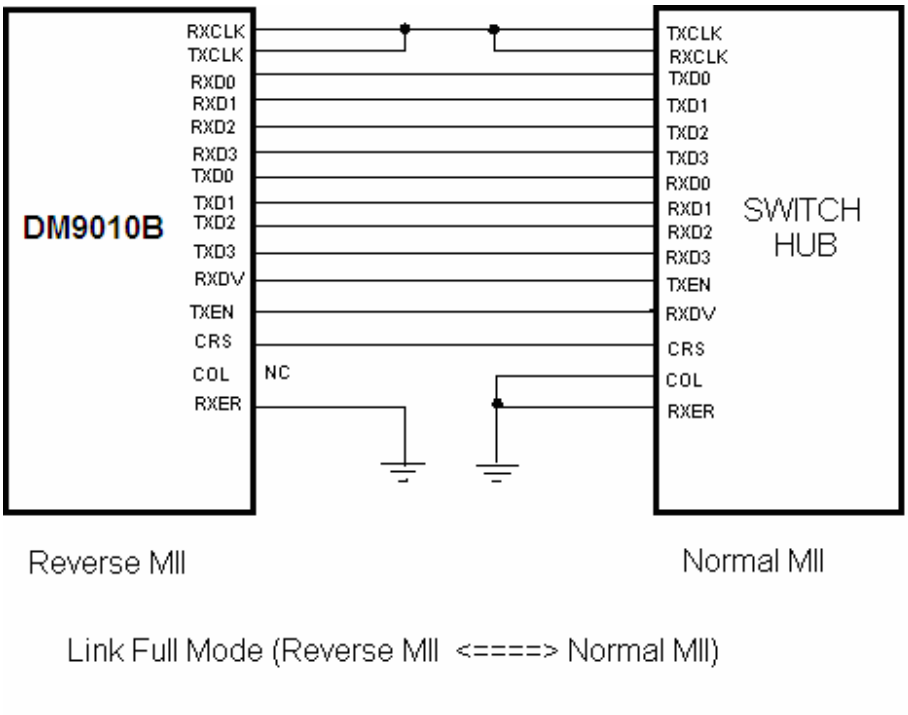

Figure 11-7

Note: When operating DM9010B at Reverse MII mode, pin 78 is pulled high. At this application, the txclk, col and crs pins will be changed from input to output.

12. PACKAGE INFORMATION

LQFP 100L Outline Dimensions Unit: Inches/mm

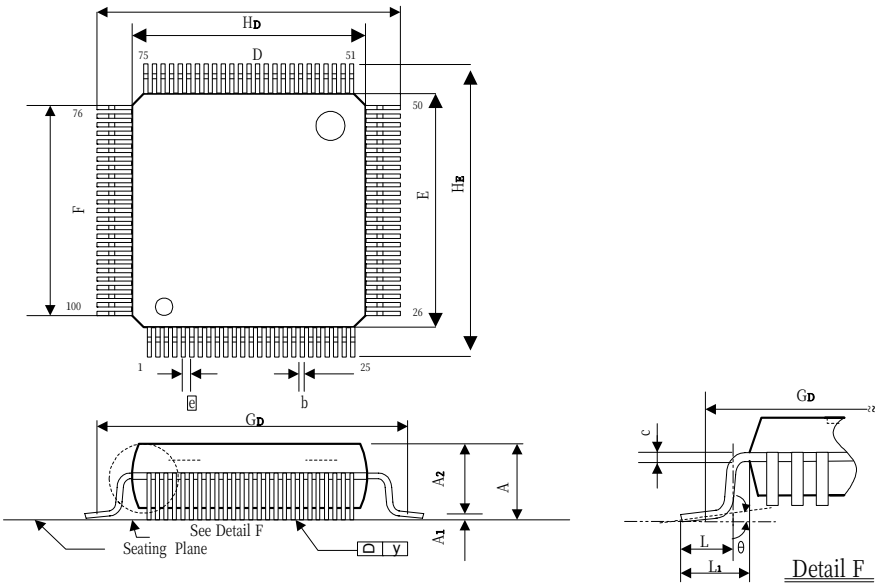

Symbol	Dimensions In Inches	Dimensions In mm
A	0.063 Max.	1.60 Max.
A1	0.004 ± 0.002	0.1 ± 0.05
A2	0.055 ± 0.002	1.40 ± 0.05
b	0.009 ± 0.002	0.22 ± 0.05
c	0.006 ± 0.002	0.15 ± 0.05
D	0.551 ± 0.005	14.00 ± 0.13
E	0.551 ± 0.005	14.00 ± 0.13
e	0.020 BSC.	0.50 BSC.
F	0.481 NOM.	12.22 NOM.
GD	0.606 NOM.	15.40 NOM.
HD	0.630 ± 0.006	16.00 ± 0.15
HE	0.630 ± 0.006	16.00 ± 0.15
L	0.024 ± 0.006	0.60 ± 0.15
L_1	0.039 Ref.	1.00 Ref.
y	0.004 Max.	0.1 Max.
θ	0° ~ 12°	0° ~ 12°

Notes:

1. Dimension D & E do not include resin fins.
2. Dimension GD is for PC Board surface mount pad pitch design reference only.
3. All dimensions are based on metric system.

13. ORDERING INFORMATION

Part Number	Pin Count	Package
DM9010BEP	100	LQFP(Pb-Free)

Disclaimer

The information appearing in this publication is believed to be accurate. Integrated circuits sold by DAVICOM Semiconductor are covered by the warranty and patent indemnification provisions stipulated in the terms of sale only. DAVICOM makes no warranty, express, statutory, implied or by description regarding the information in this publication or regarding the information in this publication or regarding the freedom of the described chip(s) from patent infringement. FURTHER, DAVICOM MAKES NO WARRANTY OF MERCHANTABILITY OR FITNESS FOR ANY PURPOSE. DAVICOM reserves the right to halt production or alter the specifications and prices at any time without notice. Accordingly, the reader is cautioned to verify that the data sheets and other information in this publication are current before placing orders. Products described herein are intended for use in normal commercial applications. Applications involving unusual environmental or reliability requirements, e.g. military equipment or medical life support equipment, are specifically not recommended without additional processing by DAVICOM for such applications. Please note that application circuits illustrated in this document are for reference purposes only.

DAVICOM's terms and conditions printed on the order acknowledgment govern all sales by DAVICOM. DAVICOM will not be bound by any terms inconsistent with these unless DAVICOM agrees otherwise in writing. Acceptance of the buyer's orders shall be based on these terms.

Company Overview

DAVICOM Semiconductor Inc. develops and manufactures integrated circuits for integration into data communication products. Our mission is to design and produce IC products that are the industry's best value for Data, Audio, Video, and Internet/Intranet applications. To achieve this goal, we have built an organization that is able to develop chipsets in response to the evolving technology requirements of our customers while still delivering products that meet their cost requirements.

Products

We offer only products that satisfy high performance requirements and which are compatible with major hardware and software standards. Our currently available and soon to be released products are based on our proprietary designs and deliver high quality, high performance chipsets that comply with modem communication standards and Ethernet networking standards.

Contact Windows

For additional information about DAVICOM products, contact the Sales department at:

Headquarters

Hsin-chu Office:
No.6 Li-Hsin Rd. VI,
Science-based Industrial Park,
Hsin-chu City, Taiwan, R.O.C.
TEL: +886-3-5798797
FAX: +886-3-5646929
MAIL: sales@davicom.com.tw
HTTP: http://www.davicom.com.tw

WARNING
Conditions beyond those listed for the absolute maximum may destroy or damage the products. In addition, conditions for sustained periods at near the limits of the operating ranges will stress and may temporarily (and permanently) affect and damage structure, performance and/or function.