Universality

CMI9738 is a 4CH AC97 CODEC, applicable for leading MB chipsets of Intel®, VIA®, Ali®, and SIS®CMI9738 is ideal for PC99-compliant desktops, notebooks, and home entertainment PCs where high-quality audio is a must.

4CH Playback

The specially-designed 4CH hardware architecture of CMI9738 allows all types of south bridge to playback 4CH audio, thus helping commonplace south bridge get rid of the limitation of 2CH audio playback capability.

Cost-effectiveness

As to the cost concern, CMI9738 integrates the earphone buffer, analog CD differential interface, and analog switch for rear channel audio to Line-in. Simply by using 0.1uf decoupling capacitor, CMI9738 meets PC99 frequency response requirements. Alongside offering standard LQFP 48pin packaging option, CMI9738 also offers SOP 24pin packaging, thus helps further reduce the hardware cost.

More Audio Option

Last but not least, CMI9738 provides Sensaura® 3D audio option. In that regard, the audio quality of CMI9738 is fabulous beyond general expectation.

Features

- Intel® AC'97(Rev. 2.2) compatible.
- High S/N ratio meets PC 99 requirements.
- 4CH DAC, applicable for leading motherboard chipsets.
- Full-duplex CODEC.
- Built-in earphone buffer.
- Line-in phonejack share with rear out.
- Low-cost 0.1uf capacitors for decoupling.
- 48 LQFP package(pin to pin compatible with 2-channel CODEC) and 24-lead TSSOP package.
- Drivers support EAX, Echo effects, WDM version, etc.
- Microsoft® WHQL certified
- Sensaura™HRTF 3D audio enhancement (optional).

Pin Diagram

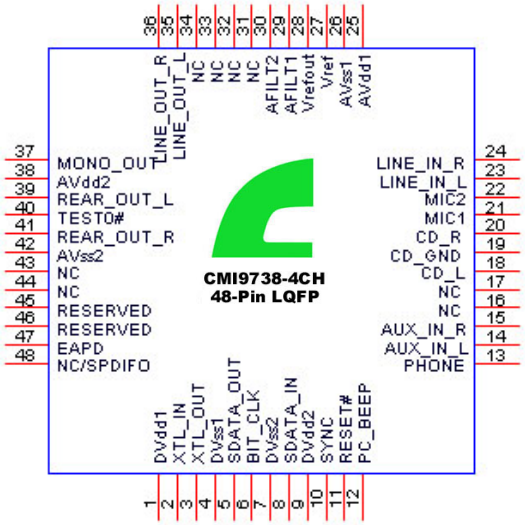

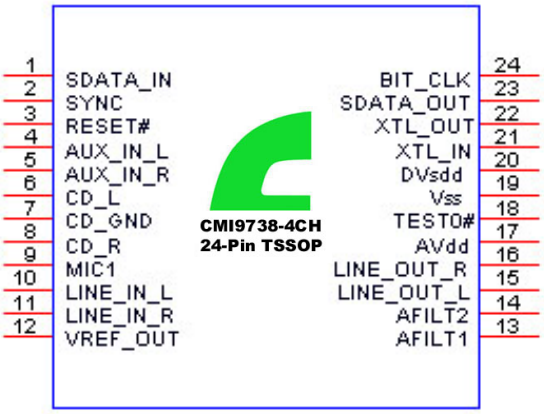

C-MEDIA Electronics Inc.
6F, 100, Sec. 4, Civil Boulevard, Taipei, Taiwan, R.O.C. 106
TEL: 886-2-8773-1100 FAX: 886-2-8773-2211 E-mail:cmedia@ms4.hinet.net

Revision Date：1/2001

PIN DESCRIPTIONS

48-Pin LQFP

PIN #	Signal Name	PIN #	Signal Name
1	DVdd1	25	AVdd1
2	XTL_IN	26	AVss1
3	XTL_OUT	27	Vref
4	DVss1	28	Vrefout
5	SDATA_OUT	29	AFILT1
6	BIT_CLK	30	AFILT2
7	DVss2	31	NC
8	SDATA_IN	32	NC
9	DVdd2	33	NC
10	SYNC	34	NC
11	RESET#	35	LINE_OUT_L
12	PC_BEEP	36	LINE_OUT_R
13	PHONE	37	MONO_OUT
14	AUX_IN_L	38	AVdd2
15	AUX_IN_R	39	REAR_OUT_L
16	VIDEO_L	40	TEST0#
17	VIDEO_R	41	REAR_OUT_R
18	CD_L	42	AVss2
19	CD_GND	43	NC
20	CD_R	44	NC
21	MIC1	45	RESERVED
22	MIC2	46	RESERVED
23	LINE_IN_L	47	EAPD
24	LINE_IN_R	48	NC

24-Pin TSSOP

PIN #	Signal Name
1	SDATA_IN
2	SYNC
3	RESET#
4	AUX_IN_L
5	AUX_IN_R
6	CD_L
7	CD_GND
8	CD_R
9	MIC1
10	LINE_IN_L
11	LINE_IN_R
12	VREF_OUT
13	AFILT1
14	AFILT2
15	LINE_OUT_L
16	LINE_OUT_R
17	AVdd
18	TEST0#
19	Vss
20	DVsdd
21	XTL_IN
22	XTL_OUT
23	SDATA_OUT
24	BIT_CLK

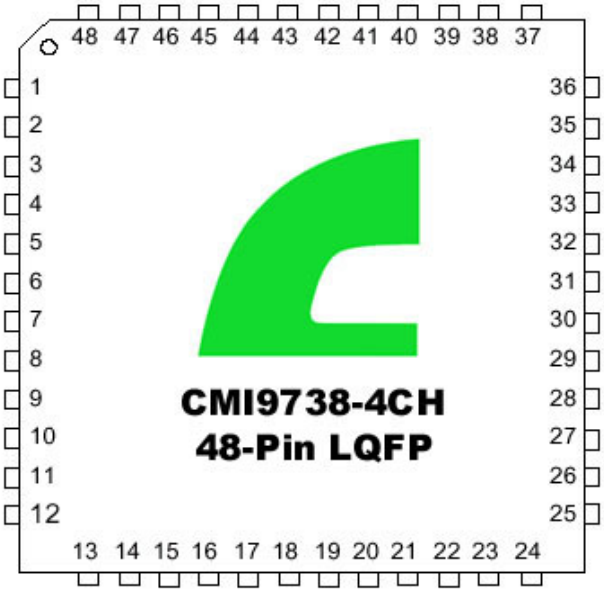

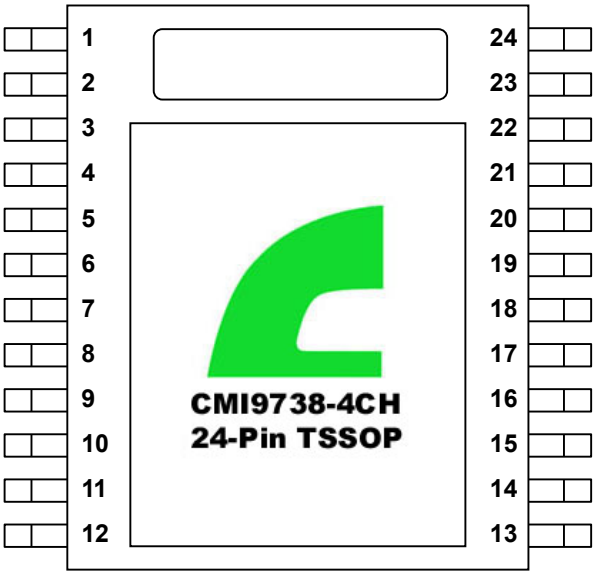

C-MEDIA Electronics Inc.
6F, 100, Sec. 4, Civil Boulevard, Taipei, Taiwan, R.O.C. 106
TEL: 886-2-8773-1100 FAX: 886-2-8773-2211 E-mail:cmedia@ms4.hinet.net

CMI9738 Mixer Block Diagram

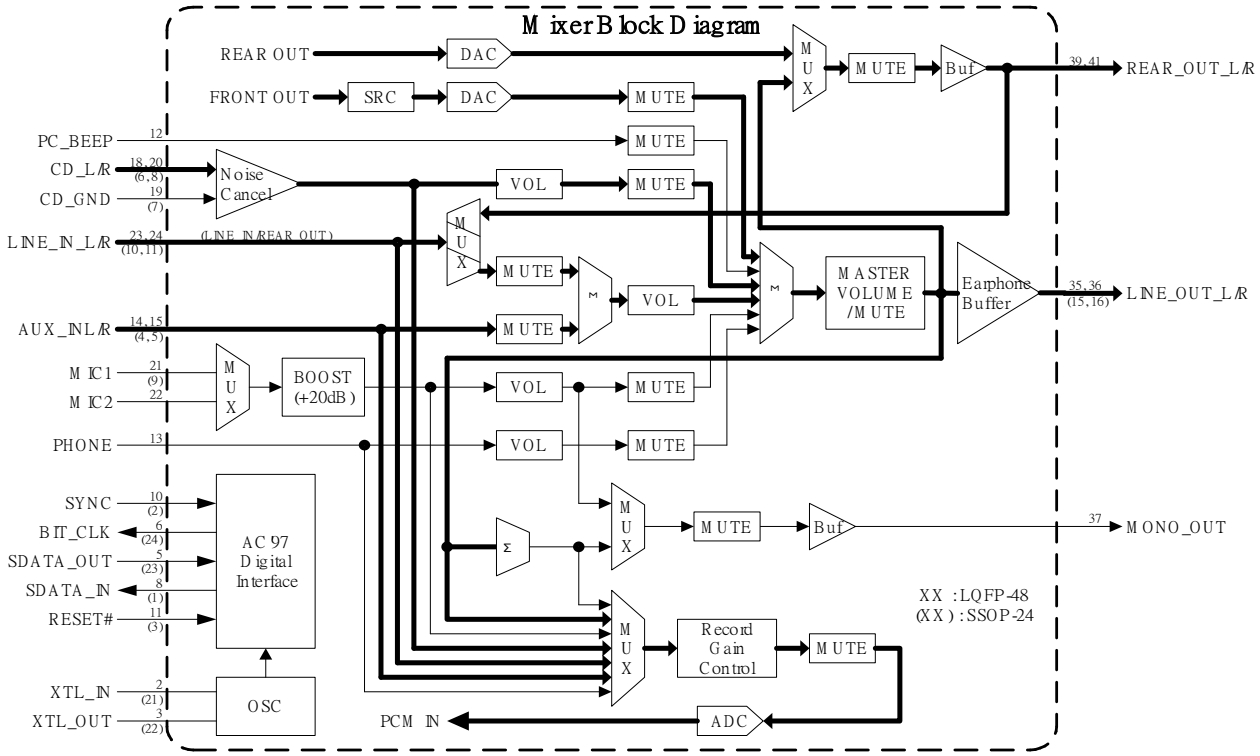

The CMI9738 mixer is designed to the AC'97 specification to manage playback and record of all digital and analog audio sources in the PC environment. These include：

- **System audio**：digital PCM input and output for business, games, and multimedia
- **CD/DVD**：analog CD/DVD-ROM Redbook audio with internal connections to Codec mixer
- **Mono microphone**：choice of desktop or headset mic, with programmable boost and gain
- **Speakerphone**：use of system mic & speakers for telephony, DSVD, and video conferencing
- **Stereo line in**：analog external line level source from consumer audio, video camera, etc
- **AUX/synth**：analog FM or wavetable synthesizer, or other internal source

SOURCE	FUNCTION	CONNECTION
PC_BEEP	PC beep pass thru	from PC beeper output
PHONE	speakerphone or DLP in	from telephony subsystem
MIC1	desktop microphone	from mic jack
MIC2	headset microphone	from headset mic jack
LINE_IN	external audio source	from line in jack
CD	audio from CD-ROM drive	cable from CD-ROM
AUX	upgrade synth or other external source	internal connector
PCM out	digital audio output from AC '97 Controller	AC-link
Mix out	mix of all sources	AC '97 internal
LINE_OUT	stereo mix of all sources (front channel)	to output jack
REAR_OUT	stereo output of rear (surround) channel	to output jack
MONO_OUT	mic or mix for speakerphone or DLP out	to telephony subsystem
PCM in	digital audio input to AC '97 Controller	AC-link

OUTPUT MIX SUPPORTS:
•stereo mix of all sources for LINE_OUT
•mono mic or mix for MONO_OUT
•stereo output for REAR_OUT
INPUT MUX SUPPORTS:
•any mono or stereo source
•mono or stereo mix of all sources

C-MEDIA Electronics Inc.
6F, 100, Sec. 4, Civil Boulevard, Taipei, Taiwan, R.O.C. 106
TEL: 886-2-8773-1100 FAX: 886-2-8773-2211 E-mail:cmedia@ms4.hinet.net

Circuit Diagram for CMI9738-4CH (48-Pin LQFP)

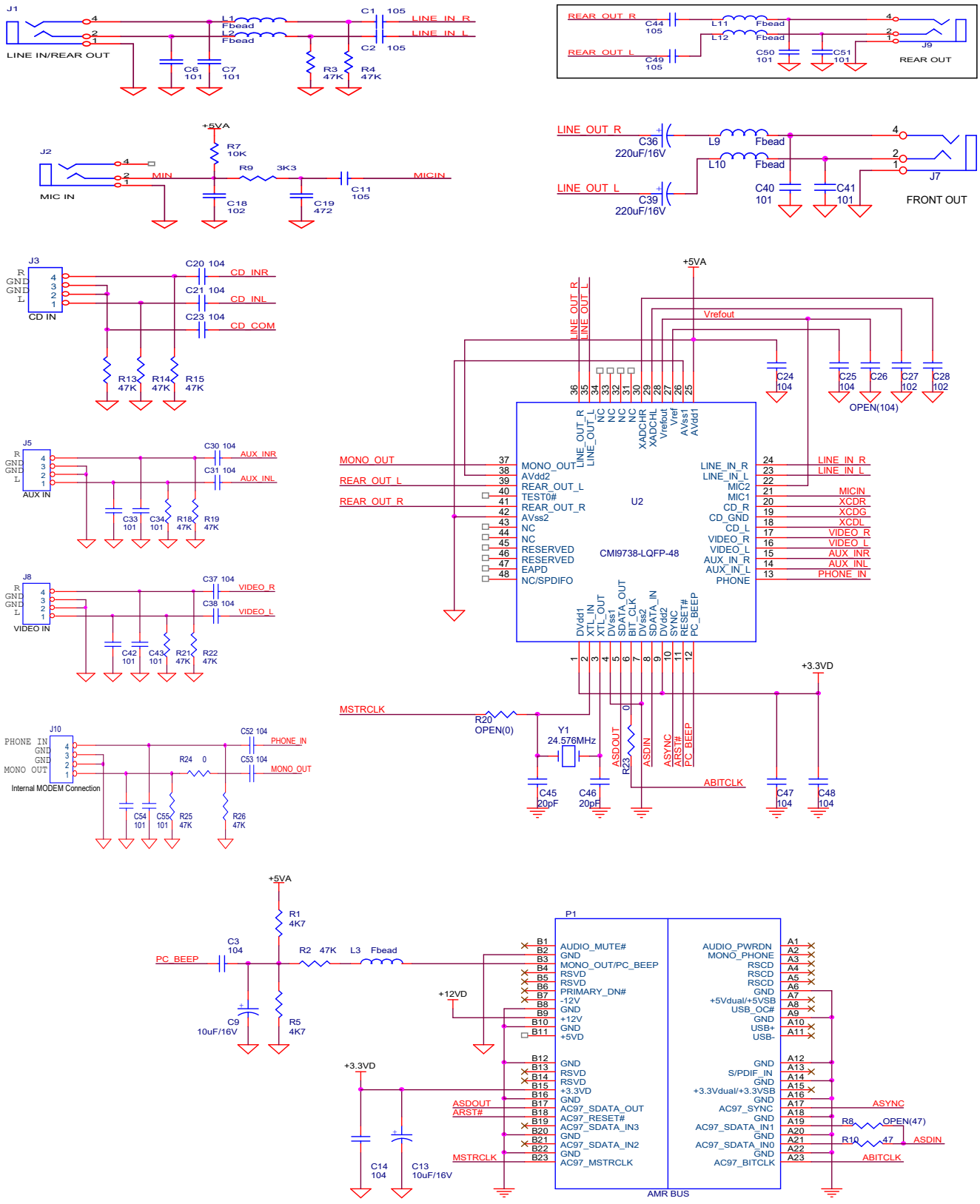

C-MEDIA Electronics Inc.
6F, 100, Sec. 4, Civil Boulevard, Taipei, Taiwan, R.O.C. 106
TEL: 886-2-8773-1100 FAX: 886-2-8773-2211 E-mail:cmedia@ms4.hinet.net

Circuit Diagram for CMI9738-4CH (24-Pin SOP)

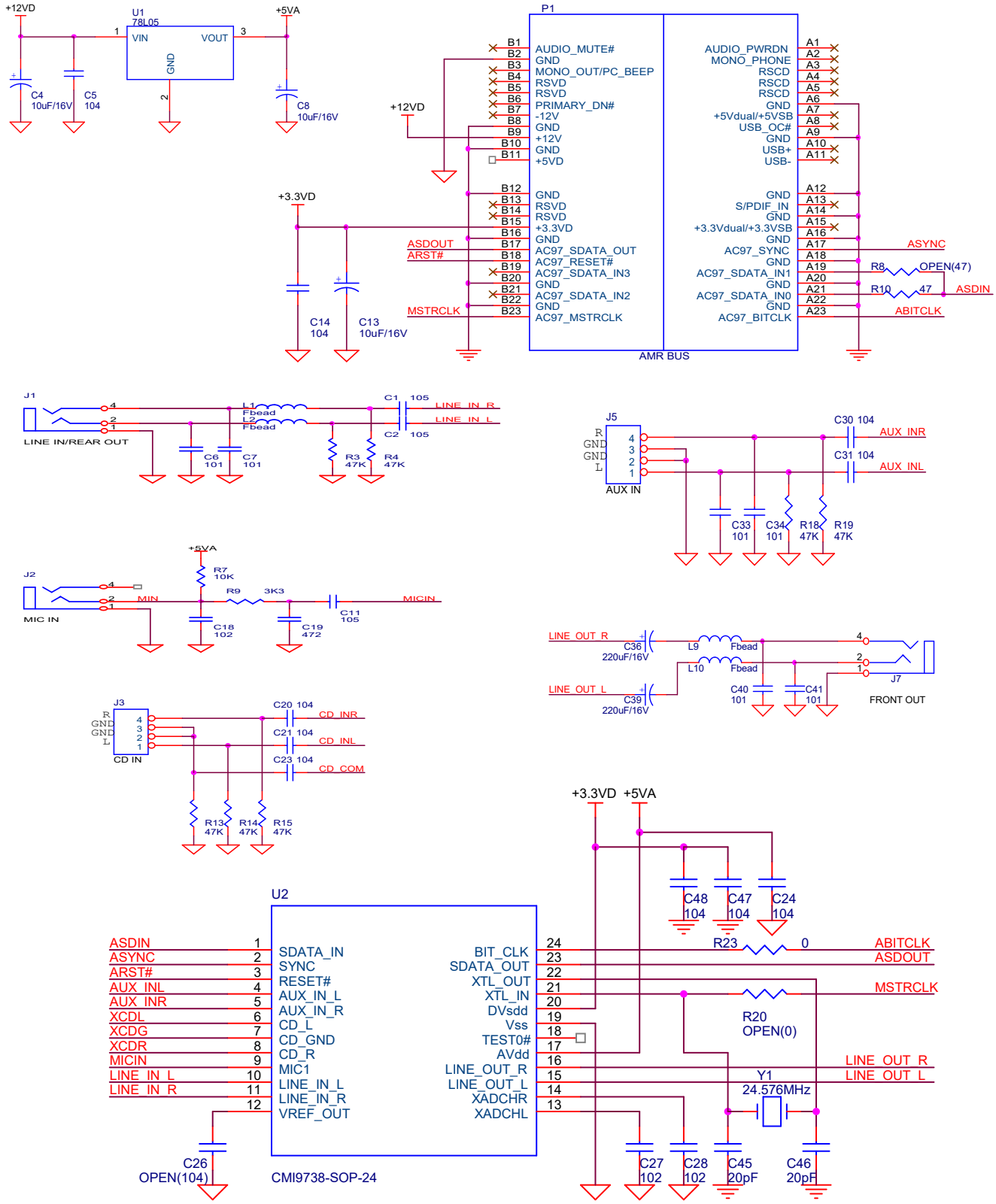

C-MEDIA Electronics Inc.
6F, 100, Sec. 4, Civil Boulevard, Taipei, Taiwan, R.O.C. 106
TEL: 886-2-8773-1100 FAX: 886-2-8773-2211 E-mail:cmedia@ms4.hinet.net

ORDERING INFORMATION

Part Number	Package	Temperature Range	Supply Range
CMI9738	48-Pin LQFP 9mm×7mm×1.6mm	0 o C to +70 o C	DVdd = 3.3V or 5V, AVdd = 5V
CMI9738	24 Pin-TSSOP 7.9mm×6.5mm×1.1mm	0 o C to +70 o C	DVdd = 3.3V or 5V, AVdd = 5V

Outline Dimensions Dimensions shown in inches and （mm）

◆48-Lead Thin Plastic Quad Flatpack (LQFP) (ST-48)

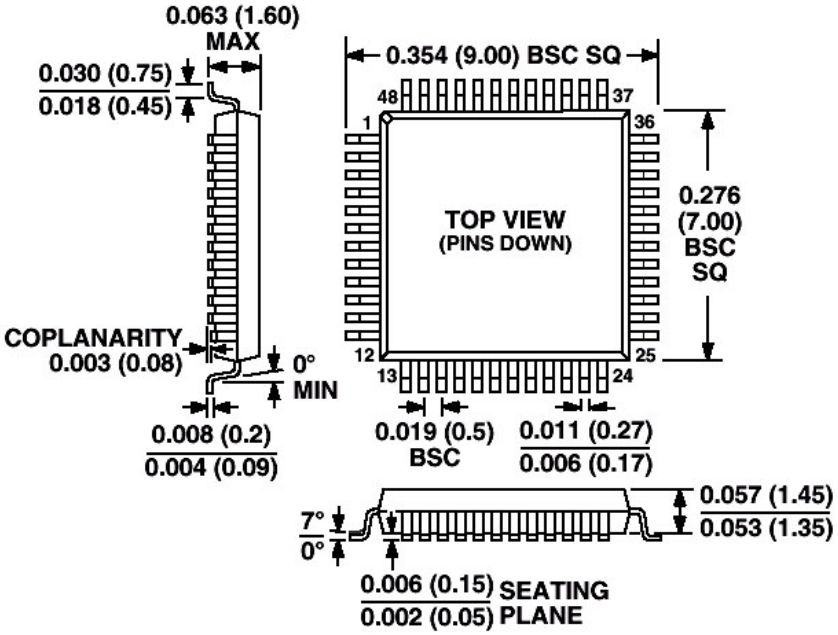

◆24-Lead Plastic TSSOP (RU-24)

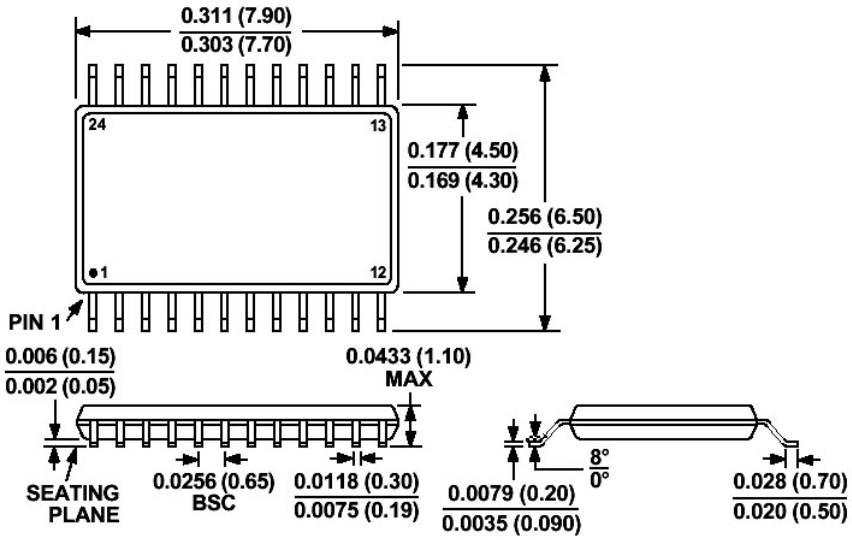

C-Media reserves the right to change specifications without notice.

C-MEDIA Electronics Inc.
6F, 100, Sec. 4, Civil Boulevard, Taipei, Taiwan, R.O.C. 106
TEL: 886-2-8773-1100 FAX: 886-2-8773-2211 E-mail:cmedia@ms4.hinet.net