Intel® 536EP V.92 Analog Modem Chipset for PCI and Mini-PCI Applications

Overview

The Intel® 536EP is a V.92 controller-less modem chipset designed to serve a wide range of applications including notebooks, desktops, Internet appliances and set-top boxes.

This ITU V.92 compliant chipset gives modem manufacturers the ability to design PCI or Mini-PCI products that deliver V.92 features like quick connect, modem-on-hold, and 48K upload speeds. It also supports V.44 compression for improved throughput.

The 536EP chipset consists of the DQ82536EP (DSP), and MD1724 Analog Front End (AFE) or silicon Data Access Arrangement (DAA).

Host-based controller software contains code for all controller functions for data (including error correction and data compression), fax and voice modes.

All digital signal processing functions are performed by the DSP including modulation, echo cancellation, call progress monitoring and voice processing.

Power management features like Advanced Configuration Power Interface (ACPI), Wake-Up on Ring (WOR), and low overall power usage make the 536EP an ideal chipset for modems designed for notebook computers.

The 536EP supports Telephone Emulation mode, IS-101 voice commands, and record and playback message capabilities when configured with a MD1724. Telephone-Emulation mode allows a handset/microphone-speaker and modem to be used as a complete telephone.

The V.80 option ensures compatibility with host-based H.324 videoconferencing application software. The 536EP supports both transparent and framed submodes of the V.80 synchronous access mode, plus Voice Call First and full-duplex speakerphone.

Operating system support includes Windows* 95, 98, ME, NT 4.0, 2000, XP, and Linux*

System Block Diagram

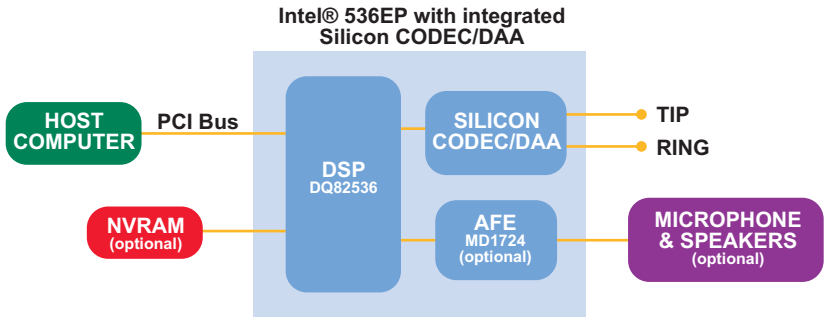

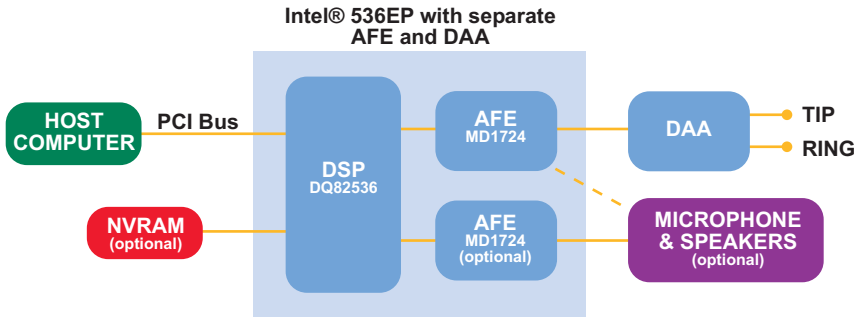

Features

- Data modulation
  - Data rates up to 56 kbps†
  - ITU V.92 and V.90 compliant
  - ITU V.34 (33,600 to 2,400 bps)
  - ITU V.32 bis, V.23, V.22 bis, V.21
  - Bell* 212A and 103
  - Error correction: ITU V.42 and MNP* 2–4
  - Data compression: ITU V.44, V.42 bis and MNP 5
- Fax modulation
  - ITU V.17, V.29 to 14,400 bps
  - Fax Class 1 commands
- Interface
  - PCI 2.2 compliant
- PC telephony
  - International telephony support
  - Voice compression: ADPCM, linear, and CL1
  - 4800, 7200, 8000, 9600, and 11025 samples/sec.
  - Full-duplex, echo-cancelled digital speakerphone
  - Telephone emulation for headset applications
  - Voice IS-101 commands
  - ITU V.80 for videoconferencing
- Power requirements
  - 3.3V DSP PADS
  - 1.3V DSP Core
- Power Management
  - Automatic sleep and wake-up modes
  - ACPI (Advanced Configuration Power Interface)
  - WOR (Wake-up On Ring)
- Exceeds Microsoft* PC 2000 requirements
- Microsoft, Windows* TAPI-compliant
- AT command-driven
- Supports Windows 95, 98, ME, NT4.0, 2000, XP and Linux*

†maximum speed allowed by the FCC is 53.333 kbps.

Product	Package
DQ82536 Digital Signal Processor (DSP)	128-pin LQFP
MD1724 Analog Front End (AFE)	44-pin LQFP
Silicon DAA	16-pin SOIC or TSSOP

Intel Access

World Wide Web	www.intel.com
Developer site	www.developer.intel.com
Intel, Voiceband Modem Product Line	
USA - California	(510) 683-6600
USA - North Carolina	(919) 870-5060
Germany	(49) 681-99272-0
Taiwan	(886) 2-2514-4200

Intel Corporation assumes no responsibility for the use of any circuitry other than circuitry embodied in an Intel product. No other circuit patent licenses are implied. Information contained herein is subject to change without notice and supersedes previously published specifications on these devices. *Other brands and names are the property of their respective owners.

For more information, visit the Intel Web site at: **www.developer.intel.com**

UNITED STATES AND CANADA
Intel Corporation
Robert Noyce Building
2200 Mission College Blvd.
P.O. Box 58119
Santa Clara, CA 95052-8119
USA
(800) 628-8686

EUROPE
Intel Corporation (UK) Ltd.
Pipers Way
Swindon
Wiltshire SN3 1RJ
UK
(44) 1793 403 0000

ASIA-PACIFIC
Intel Semiconductor Ltd.
32/F Two Pacific Place
88 Queensway, Central
Hong Kong, SAR
(852) 2844 4555

JAPAN
Intel Kabushiki Kaisha
P.O. Box 115 Tsukuba-gakuen
5-6 Tokodai, Tsukuba-shi
Ibaraki-ken 305
Japan
(81) 298 47 8522

SOUTH AMERICA
Intel Semicondutores do Brazil
Rue Florida, 1703-2 and CJ22
CEP 04565-001 Sao Paulo-SP
Brazil
(55) 11 5505 2296

Copyright © 2001 Intel Corporation