CONEXANT™

Adaptive Flicker Filter Video Encoder

CX25870/871

Highest-Quality Video Encoder with "Adaptive" Flicker Filtering

Conexant's CX25870/871 is specifically designed to meet TV out system requirements for the next-generation desktop PCs, notebook PCs, game consoles and set-top boxes. With pin- and software-forward compatibility to the Bt868/869, manufacturers can quickly bring to market new solutions that support adaptive flicker filtering, ATSC High Definition Television (HDTV) output, true international television display (NTSC, PAL and SECAM output), and resolutions from 320 x 200 to 1024 x 768. The CX25870/871 supports all features of the market's most popular PC video encoder, Bt868/869, including 5-line vertical and horizontal flicker filtering, overscan compensation and 10-bit DACs.

International Support

The CX25870/871 provides the most complete support for products with TV out capability shipped into the U.S. and international markets. Support for SCART and WSS 16:9 (wide screen signaling) per EIAJ CPR-1204 and ITU-R BT.119 are now built in. The CX25870/871 provides support of international standards including NTSC (North America, Taiwan, Japan), PAL-B, D, G, H, I (Europe, Asia), PAL-M (Brazil), PAL-N (Paraguay), PAL-Nc (Argentina), PAL-60, SECAM-D, K, K1 (Russia), SECAM-B, G, H (Middle East) and SECAM-L (France).

Distinguishing Features

- True international support for NTSC, PAL and SECAM output
- HDTV output capability
- Adaptive flicker filtering
- Supports resolutions from 320 x 200 to 1024 x 768
- Pin- and software-forward compatible with the Bt868/869

Adaptive Flicker Filter Video Encoder

CX25870/871

HDTV Output Mode

HDTV is the wave of the future. Consumers are beginning to purchase their first HDTV sets. With the start of this television set transition, TV out capability must now include the ability to connect and display PC, set-top box and game console content on these new HDTV television sets.

The CX25870/871 provides an HDTV output capability which generates either the analog RGB or analog YP_BP_R component video output necessary for driving a HDTV's high definition input port. While the CX25870/871 is in HDTV output mode, the device will provide either analog RGB or analog YP_BP_R signals and automatically insert tri-level synchronization pulses (when necessary) and vertical synchronizing "broad pulses".

The CX25870/871 is compliant with EIA770-3, SMPTE 274M/293M/296M and supports ATSC HDTV resolutions including 480p, 720p and 1080i.

Adaptive Flicker Filtering

The CX25870/871 provides Conexant's unique adaptive flicker filtering capability. This feature gives new meaning to the words "end-user ease of use" by providing the ability to automatically determine the optimal amount of flicker filtering for a given application. Now, consumers do not have to manually adjust the

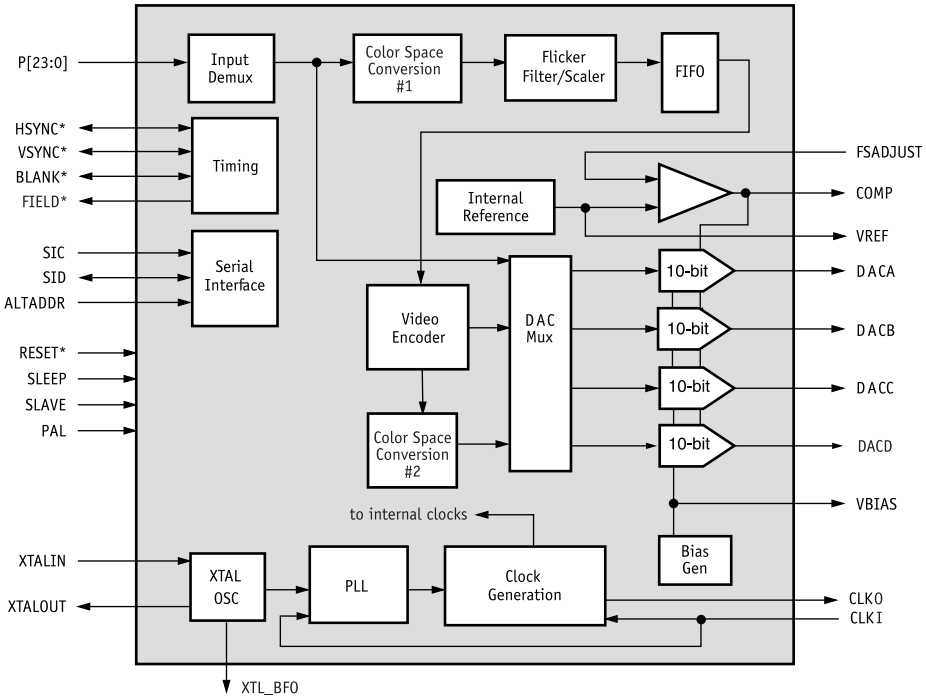

CX25870/871 architecture block diagram

amount of flicker filtering as they switch from applications requiring significant flicker filtering (e.g. text intensive applications like an Excel spreadsheet) to those requiring little or no flicker filtering (e.g. a DVD movie). The CX25870/871 does this automatically, even when two applications are being run simultaneously that require different amounts of flicker filtering. The CX25870/871 adjusts the flicker filtering of the given content on a pixel-by-pixel basis to bring the user's viewing experience to a whole new level.

Pixel Input Formats and Timing

The CX25870/871 converts a wide range of input formats to television video formats. The input resolution can be non-interlaced with an active resolution of 320 x 200 to 1024 x 768 or interlaced such as CCIR601, CCIR656 and VESA VIP.

Auto Configuration Modes

The CX25870/871 offers enhanced auto configuration mode functionality. A total of 48 different modes are now available which provide pre-programmed register settings for at least 95% of typical TV out settings. For example, PAL-M can be autoconfigured to an input resolution of 640 x 480 RGB with a moderate amount of overscan compensation with just a single register write.

Register Readback

The CX25870/871 full-register readback capability has been added to provide a real time-to-market advantage for manufacturers as they develop new products.

What is a PC Video Encoder?

A PC video encoder allows PC users to enjoy the "big screen experience" on their PCs. This means that instead of being hunched over a small VGA screen when playing games or watching DVD movies, PC users can now experience exciting 3D games with the involvement and full-visual impact that only a big screen television can provide. The PC encoder is a highly-sophisticated chip that converts the high-resolution progressive scan 2D/3D VGA image generated by a PC's graphics subsystem into a format that can be displayed on an interlaced television. This conversion should include "flicker filtering" because if you were to directly display a VGA image on a TV set, the image would "flicker" due to the reduced resolution of the TV set compared to a VGA monitor. Only the Conexant family of 5-line vertical and horizontal flicker filter and adaptive flicker filter PC video encoders provide the crisp video quality that allows the family PC to be at the center of home entertainment and productivity.

Master, Pseudo-Master and Slave Modes

The CX25870/871 can operate as either a timing master, pseudo-master or slave. In master mode, the CX25870/871 will generate the CLK, HSYNC, VSYNC and BLANK signals. In pseudo-master mode, the CX25870/871 generates the CLK only and the graphics controller generates the HSYNC, VSYNC and BLANK signals. In Slave mode, the CX25870/871 relies on the graphics controller to generate all timing signals.

Macrovision™ Support

The CX25871 provides Macrovision 7.1.L1 anticopy protection.

Product Features

- **Adaptive flicker filtering for enhanced image and text sharpness**
- **Supports any input resolution from 320 x 200 to 1024 x 768**
- **48 automatic configuration modes**
- **Programmable power management**
- **Pin- and software-forward compatibility with the Bt868/869**
- **SCART support (R/G/B, 4th DAC=CVBS)**
- **Up to 5-line vertical and horizontal flicker filtering**
- **WSS 16:9 (wide screen signaling) support**
- **Macrovision 7.1.L1 protection with the CX25871**
- **10-bit DACs for superior picture quality**
- **Wide selection of overscan compensation ratios**
- **Serial programming interface**
- **Buffered crystal clock output**
- **NTSC/PAL/SECAM TV outputs:**
  - Interlaced or non-interlaced
  - Composite
  - S-video(Y/C)
  - Simultaneous S-video and Composite
  - YUV
- **YCrCb non-interlaced input to interlaced output**
  - 16-bit 4:2:2 multiplexed 8-bit input
  - 24-bit 4:4:4 multiplexed 12-bit input
  - 24-bit 4:4:4 non-multiplexed 24-bit input
  - Alternate 24-bit 4:4:4 non-multiplexed 24-bit input
- **RGB non-interlaced input to interlaced output**
  - 15/16-bit multiplexed 8-bit input
  - 24-bit multiplexed 12-bit input
  - 16-bit non-multiplexed 16-bit input
  - 24-bit non-multiplexed 24-bit input
  - Alternate 24-bit non-multiplexed 24-bit input
- **RGB non-interlaced input to RGB** non-interlaced output
  - 15/16-bit multiplexed 8-bit input
  - 24-bit multiplexed 12-bit input
  - 24-bit non-multiplexed 24-bit input
- **RGB or YCrCb interlaced input to interlaced output**
  - CCIR656
  - CCIR601/DVD
  - VESA VIP
- **80-pin PQFP package**

Applications

- **Desktop PCs**
- **Graphics cards**
- **Notebook computers**
- **Game consoles**
- **Digital television receiver cards**
- **Living room PCs**
- **Internet PCs**
- **DVD players**
- **Set-top boxes**

Conexant and the Conexant symbol are trademarks of Conexant Systems, Inc.

Further Information
literature@conexant.com
(800) 854-8099 (North America)
(949) 483-6996 (International)
Order # 100431B
00-0969
Digital Infotainment
Printed in USA

World Headquarters
Conexant Systems, Inc.
4311 Jamboree Road
Newport Beach, CA
92660-3007
Phone: (949) 483-4600
Fax 1: (949) 483-4078
Fax 2: (949) 483-4391

Americas

U.S. Northwest – Santa Clara
Phone: (408) 249-9696
Fax: (408) 249-7113

U.S. Southwest – Los Angeles
Phone: (805) 376-0559
Fax: (805) 376-8180

U.S. Southwest – Newport Beach
Phone: (949) 483-9119
Fax: (949) 483-9090

U.S. San Diego
Phone: (858) 713-4730
Fax: (858) 713-4008

U.S. North Central – Illinois
Phone: (630) 773-3454
Fax: (630) 773-3907

U.S. South Central/Mexico – Texas
Phone: (972) 871-1920
Fax: (972) 871-8910

U.S. Northeast – Massachusetts
Phone: (978) 367-3200
Fax: (978) 256-6868

U.S. Carolinas – North Carolina
Phone: (919) 858-9110
Fax: (919) 858-8669

U.S. Southeast/South America – Florida
Phone: (727) 799-8406
Fax: (727) 799-8306

U.S. Mid-Atlantic – Pennsylvania
Phone: (215) 244-6784
Fax: (215) 244-9292

Canada – Ontario
Phone: (613) 271-2358
Fax: (613) 271-2359

Europe

Europe Central – Germany
Phone: +49 89 829-1320
Fax: +49 89 834-2734

Europe North – England
Phone: +44 1344 486444
Fax: +44 1344 486555

Europe – Israel/Greece
Phone: +972 9 9524000
Fax: +972 9 9573732

Europe South – France
Phone: +33 1 41 44 36 51
Fax: +33 1 41 44 36 90

Europe Mediterranean – Italy
Phone: +39 02 93179911
Fax: +39 02 93179913

Europe – Sweden
Phone: +46 (0) 8 5091 4319
Fax: +46 (0) 8 590 041 10

Europe – Finland
Phone: +358 (0) 9 85 666 435
Fax: +358 (0) 9 85 666 220

Asia Pacific

Taiwan
Phone: (886-2) 2-720-0282
Fax: (886-2) 2-757-6760

Australia
Phone: (61-2) 9869 4088
Fax: (61-2) 9869 4077

China – Central
Phone: 86-21-6361-2515
Fax: 86-21-6361-2516

China – South
Phone: (852) 2 827-0181
Fax: (852) 2 827-6488

China – South (Satellite)
Phone: (86) 755-5182495
Fax: (86) 755-5183024

China – North
Phone: (86-10) 8529-9777
Fax: (86-10) 8529-9778

India
Phone: (91-11) 692-4789
Fax: (91-11) 692-4712

Korea
Phone: (82-2) 565-2880
Fax: (82-2) 565-1440

Korea (Satellite)
Phone: (82-53) 745-2880
Fax: (82-53) 745-1440

Singapore
Phone: (65) 737 7355
Fax: (65) 737 9077

Japan
Phone: (81-3) 5371 1520
Fax: (81-3) 5371 1501